ARCTEQ
PART OF ENSTO GROUP

AQ-M257

Motor protection device

Instruction manual

Table of contents

1 Document information 7
1.1 Version 2 revision notes 7
1.2 Version 1 revision notes 11
1.3 Safety information 12
1.4 Abbreviations 13
2 General 15
3 Device user interface 16
3.1 Local panel structure 16
4 Functions 18
4.1 Functions included in AQ-M257 18
4.2 Measurements 21
4.2.1 Current measurement and scaling in differential applications 21
4.2.2 Voltage measurement and scaling 32
4.2.3 Power and energy calculation 47
4.2.4 Frequency tracking and scaling 55
4.3 General menu 58
4.4 Protection functions 61
4.4.1 General properties of a protection function 61
4.4.2 Non-directional overcurrent protection (I>; 50/51) 71
4.4.3 Non-directional earth fault protection (I0>; 50N/51N) 76
4.4.4 Directional overcurrent protection (Idir>; 67) 81
4.4.5 Directional earth fault protection (I0dir>; 67N/32N) 88
4.4.6 Negative sequence overcurrent/ phase current reversal/ current unbalance protection (I2>; 46/46R/46L) 101
4.4.7 Harmonic overcurrent protection (Ih>; 50H/51H/68H) 105
4.4.8 Circuit breaker failure protection (CBFP; 50BF/52BF) 112
4.4.9 Low-impedance or high-impedance restricted earth fault/ cable end differential protection (I0d>; 87N) 127
4.4.10 Overvoltage protection (U>; 59) 137
4.4.11 Undervoltage protection (U<; 27) 144
4.4.12 Neutral overvoltage protection (U0>; 59N) 152
4.4.13 Sequence voltage protection (U1/U2>/<; 47/27P/59PN) 158
4.4.14 Overfrequency and underfrequency protection (f>/<; 81O/81U) 166
4.4.15 Rate-of-change of frequency (df/dt>/<; 81R) 170
4.4.16 Power protection (P, Q, S>/<; 32) 175
4.4.17 Motor status monitoring 180
4.4.18 Generator/motor/transformer differential protection (Idb>/Idi>/I0dHV>/I0dLV>; 87T/87G/87M/87N) 188
4.4.19 Underexcitation protection (Q<; 40) 209
4.4.20 Underimpedance protection (Z<; 21U) 216
4.4.21 Underexcitation protection (X<; 40) 220
4.4.22 Voltage-restrained overcurrent protection (Iv>; 51V) 224
4.4.23 Inadvertent energizing protection (I> U< I.A.E; 50/27) 229
4.4.24 Volts-per-hertz overexcitation protection (V/Hz>; 24) 232
4.4.25 Power factor protection (PF<; 55) 239
4.4.26 Pole slip protection (78) 243
4.4.27 Machine thermal overload protection (TM>; 49M) 248
4.4.28 Motor start/ locked rotor monitoring (Ist>; 48/14) 280
4.4.29 Frequent start protection (N>; 66) 290
4.4.30 Non-directional undercurrent protection (I<; 37) 295
4.4.31 Mechanical jam protection (Im>; 51M) 299
4.4.32 Resistance temperature detectors (RTD) 304

© Arcteq Relays Ltd

4.4.33 Programmable stage (PSx>/<; 99) ... 307
4.4.34 Arc fault protection (IArc>/I0Arc>; 50Arc/50NArc) ... 317
4.5 Control functions ... 325
4.5.1 Common signals ... 325
4.5.2 Setting group selection ... 327
4.5.3 Object control and monitoring ... 330
4.5.4 Indicator object monitoring ... 342
4.5.5 Milliampere output control ... 344
4.5.6 Programmable control switch ... 346
4.5.7 Function buttons ... 348
4.5.8 Analog input scaling curves ... 349
4.5.9 Logical outputs ... 352
4.5.10 Logical inputs ... 353
4.6 Monitoring functions ... 355
4.6.1 Current transformer supervision ... 355
4.6.2 Voltage transformer supervision (60) ... 365
4.6.3 Circuit breaker wear monitoring ... 370
4.6.4 Current total harmonic distortion (THD) ... 375
4.6.5 Voltage total harmonic distortion (THD) ... 380
4.6.6 Running hour counter ... 383
4.6.7 Measurement recorder ... 385
4.6.8 Fault register ... 385
4.6.9 Event logger ... 390
4.6.10 Disturbance recorder (DR) ... 391
4.6.11 User access control ... 397

5 Generator and motor commander application ... 402

5.1 General ... 402
5.1.1 Functions of the Generator commander ... 403
5.1.2 Excitation functions ... 404
5.1.3 Exciter unit dimensions ... 404
5.1.4 Exciter unit connections ... 405
5.2 Function descriptions ... 406
5.2.1 Protection and supervision ... 406
5.2.1.1 Excitation setting parameters ... 406
5.2.1.2 Voltage supervision ... 413
5.2.1.3 Excitation control modes ... 415
5.2.1.3.1 Automatic voltage regulator ... 415
5.2.1.3.2 Field current regulator ... 419
5.2.1.3.3 Reactive power controller ... 421
5.2.1.3.4 Power factor control ... 424
5.2.1.4 Excitation limiters ... 426
5.2.1.4.1 Underexcitation limiter ... 426
5.2.1.4.2 Stator current limiter ... 427
5.2.1.4.3 Field current limiter ... 429
5.2.1.4.4 V/Hz limiter ... 431
5.2.1.5 Power system stabilizer ... 432
5.2.2 Excitation I/O ... 433
5.2.2.1 Direct output control ... 433
5.2.2.2 DI inputs to excitation ... 438
5.2.2.3 PP inputs to excitation ... 440
5.2.2.4 Local and remote bridge I/O ... 441
5.2.2.5 Active control status ... 443
5.2.3 Remote and local control ... 446
5.2.4 Excitation internal parameters ... 450
5.2.5 Excitation setting group selection ... 455
5.2.6 Events recorded by the Generator commander ... 459
5.2.7 Other control functions ... 468
5.2.7.1 Reference values ... 468

5.2.7.2 Start and stop functions ... 468
5.2.7.3 Test mode ... 468
5.2.7.4 Test functions ... 468
5.3 Redundancy ... 468
5.3.1 Single system ... 468
5.3.2 Controller redundancy ... 469
5.3.3 Power rectifier redundancy ... 469
5.4 Others ... 469
5.4.1 Diagnostics ... 469
5.4.2 Real-time trending ... 469
6 Communication ... 470
6.1 Connections menu ... 470
6.2 Time synchronization ... 474
6.2.1 Internal ... 474
6.2.2 NTP ... 474
6.2.3 PTP ... 475
6.3 Communication protocols ... 477
6.3.1 IEC 61850 ... 477
6.3.1.1 Logical device mode and logical node mode ... 481
6.3.1.2 GOOSE ... 485
6.3.2 Modbus TCP and Modbus RTU ... 488
6.3.3 IEC 103 ... 490
6.3.4 IEC 101/104 ... 490
6.3.5 SPA ... 493
6.3.6 DNP3 ... 494
6.3.7 Modbus I/O ... 499
6.3.8 OPCUA ... 499
6.3.9 Integration time ... 500
6.4 Analog fault registers ... 502
6.5 Modbus Gateway ... 503
6.6 Realtime signals to Comm ... 505
7 Connections and application examples ... 506
7.1 Connections of AQ-M257 ... 506
7.2 Application example and its connections ... 506
8 Construction and installation ... 508
8.1 Construction ... 508
8.2 CPU module ... 511
8.3 Current measurement module ... 514
8.4 Voltage measurement module ... 515
8.5 Option cards ... 516
8.5.1 Digital input module (optional) ... 516
8.5.2 Digital output module (optional) ... 520
8.5.3 High-speed and high-current output module (optional) ... 522
8.5.4 Milliampere output module (4x mA out & 1x mA in) (optional) ... 524
8.5.5 Milliampere input module (4x mA in & 1x mA out) (optional) ... 525
8.5.6 Point sensor arc protection module (optional) ... 527
8.5.7 RTD input module (optional) ... 528
8.5.8 Double RJ45 Ethernet & IRIG-B communication module (optional) ... 529
8.5.9 Double SFP Ethernet & IRIG-B communication module (optional) ... 530
8.5.10 Double ST 100 Ethernet & IRIG-B communication module (optional) ... 531
8.5.11 Double LC or RJ45 (HSR/PRP) Ethernet communication module (optional) ... 532
8.5.12 Serial RS-232 communication module (optional) ... 533
8.6 Dimensions and installation ... 534
9 Technical data ... 537
9.1 Hardware ... 537
9.1.1 Measurements ... 537

© Arcteq Relays Ltd

9.1.1.1 Current measurement ... 537
9.1.1.2 Voltage measurement ... 539
9.1.1.3 Voltage memory ... 539
9.1.1.4 Power and energy measurement ... 540
9.1.1.5 Frequency measurement ... 541
9.1.2 CPU & Power supply ... 541
9.1.2.1 Auxiliary voltage ... 541
9.1.2.2 CPU communication ports ... 542
9.1.2.3 CPU digital inputs ... 543
9.1.2.4 CPU digital outputs ... 543
9.1.3 Option cards ... 544
9.1.3.1 Digital input module ... 544
9.1.3.2 Digital output module ... 545
9.1.3.3 High-speed and high-current output module ... 545
9.1.3.4 Milliampere output module (4 x mA out & 1 x mA in) ... 546
9.1.3.5 Milliampere input module (1x mA out & 4x mA in) ... 547
9.1.3.6 Point sensor arc protection module ... 548
9.1.3.7 RTD input module ... 549
9.1.3.8 Double RJ-45 Ethernet & IRIG-B communication module ... 550
9.1.3.9 Double SFP Ethernet & IRIG-B communication module ... 550
9.1.3.10 Double ST Ethernet & IRIG-B communication module ... 551
9.1.3.11 Double LC (HSR/PRP) Ethernet communication module ... 551
9.1.3.12 Double RJ-45 (HSR/PRP) Ethernet communication module ... 552
9.1.3.13 RS-232 & serial fiber communication module ... 552
9.1.4 Display ... 553
9.2 Functions ... 554
9.2.1 Protection functions ... 554
9.2.1.1 Generator/motor/transformer differential protection (Idb>/Idi>/I0dHV>/I0dLV>; 87T/87G/87M/87N) ... 554
9.2.1.2 Non-directional overcurrent protection (I>; 50/51) ... 555
9.2.1.3 Non-directional earth fault protection (I0>; 50N/51N) ... 556
9.2.1.4 Directional overcurrent protection (Idir>; 67) ... 557
9.2.1.5 Directional earth fault protection (I0dir>; 67N/32N) ... 558
9.2.1.6 Negative sequence overcurrent/ phase current reversal/ current unbalance protection (I2>; 46/46R/46L) ... 559
9.2.1.7 Harmonic overcurrent protection (Ih>; 50H/51H/68H) ... 560
9.2.1.8 Circuit breaker failure protection (CBFP; 50BF/52BF) ... 561
9.2.1.9 Low-impedance or high-impedance restricted earth fault/ cable end differential protection (I0d>; 87N) ... 562
9.2.1.10 Overvoltage protection (U>; 59) ... 563
9.2.1.11 Undervoltage protection (U<; 27) ... 564
9.2.1.12 Neutral overvoltage protection (U0>; 59N) ... 565
9.2.1.13 Sequence voltage protection (U1/U2>/<; 47/27P/59NP) ... 566
9.2.1.14 Overfrequency and underfrequency protection (f>/<; 81O/81U) ... 567
9.2.1.15 Rate-of-change of frequency protection (df/dt>/<; 81R) ... 567
9.2.1.16 Power protection (P, Q, S>/<; 32) ... 568
9.2.1.17 Motor start/ locked rotor monitoring (Ist>; 48/14) ... 569
9.2.1.18 Machine thermal overload protection (TM>; 49M) ... 570
9.2.1.19 Frequent start protection (N>; 66) ... 571
9.2.1.20 Non-directional undercurrent protection (I<; 37) ... 572
9.2.1.21 Mechanical jam protection (Im>; 51M) ... 572
9.2.1.22 Underimpedance protection (Z<; 21U) ... 573
9.2.1.23 Voltage-restrained overcurrent protection (Iv>; 51V) ... 574
9.2.1.24 Power factor protection (PF<; 55) ... 575
9.2.1.25 Volts-per-hertz overexcitation protection (V/Hz>; 24) ... 575
9.2.1.26 Underexcitation protection (Q<; 40) ... 576
9.2.1.27 Resistance temperature detectors (RTD) ... 577
9.2.1.28 Arc fault protection (IArc>/I0Arc>; 50Arc/50NArc) (optional) ... 577
9.2.2 Control functions ... 578

9.2.2.1 Setting group selection 578
9.2.2.2 Object control and monitoring 579
9.2.2.3 Indicator object monitoring 580
9.2.3 Monitoring functions 580
9.2.3.1 Current transformer supervision 580
9.2.3.2 Voltage transformer supervision (60) 581
9.2.3.3 Circuit breaker wear monitoring 582
9.2.3.4 Current total harmonic distortion 582
9.2.3.5 Event logger 583
9.2.3.6 Disturbance recorder 583
9.3 Tests and environmental 583
10 Ordering information 586
11 Contact and reference information 588

© Arcteq Relays Ltd

Disclaimer

Please read these instructions carefully before using the equipment or taking any other actions with respect to the equipment. Only trained and qualified persons are allowed to perform installation, operation, service or maintenance of the equipment. Such qualified persons have the responsibility to take all appropriate measures, including e.g. use of authentication, encryption, anti-virus programs, safe switching programs etc. necessary to ensure a safe and secure environment and usability of the equipment. The warranty granted to the equipment remains in force only provided that the instructions contained in this document have been strictly complied with.

Nothing contained in this document shall increase the liability or extend the warranty obligations of the manufacturer Arcteq Relays Ltd. The manufacturer expressly disclaims any and all liability for any damages and/or losses caused due to a failure to comply with the instructions contained herein or caused by persons who do not fulfil the aforementioned requirements. Furthermore, the manufacturer shall not be liable for possible errors in this document.

Please note that you must always comply with applicable local legislation and regulations. The manufacturer gives no warranties that the content of this document is in all respects in line with local laws and regulations and assumes no liability for such possible deviations.

You are advised to notify the manufacturer in case you become aware of any errors in this document or of defects in the equipment.

The manufacturer reserves the right to update or amend this document at any time.

Copyright

Copyright © Arcteq Relays Ltd. 2026. All rights reserved.

1 Document information

1.1 Version 2 revision notes

Table. 1.1 - 1. Version 2 revision notes

Revision	2.00
Date	6.6.2019
Changes	- New more consistent look. - Improved descriptions generally in many chapters. - Improved readability of a lot of drawings and images. - Updated protection functions included in every manual. - Every protection relay type now has connection drawing, application example drawing with function block diagram and application example with wiring. - Added current measurement side selection description to functions with such feature. - Added General-menu description.
Revision	2.01
Date	6.11.2019
Changes	- Added description for LED test and button test. - Added display sleep timer description. - Complete rewrite of every chapter. - Improvements to many drawings and formula images. - Order codes revised. - Added double ST 100 Mbps Ethernet communication module and Double RJ45 10/100 Mbps Ethernet communication module descriptions
Revision	2.02
Date	7.7.2020
Changes	- A number of image descriptions improved.
Revision	2.03
Date	27.8.2020

© Arcteq Relays Ltd
IM00021

Changes	- Terminology consistency improved (e.g. binary inputs are now always called digital inputs). - Tech data modified to be more informative about what type of measurement inputs are used (phase currents/voltages, residual currents/voltages), what component of that measurement is available (RMS, TRMS, peak-to-peak) and possible calculated measurement values (powers, impedances, angles etc.). - Tech data updated: non-directional overcurrent - Tech data updated: non-directional earthfault - Tech data updated: directional earthfault - Tech data updated: current unbalance - Tech data updated: transformer differential - Tech data updated: overfrequency, underfrequency and rate-of-change-of-frequency. - Improvements to many drawings and formula images. - AQ-M257 Functions included list Added: Power factor protection, motor status monitoring, voltage memory, indicator objects, vector jump protection, another instance of CTS, running hour counterv and measurement recorder. - Added 6th harmonic to harmonic overcurrent protection function. - Fixed reset ratio of under- and overfrequency protection function from 103 % / 97 % to +/- 20 mHz.. - Fixed reset ratio of rate-of-change-of-frequency protection function from 20 mHz/s to 100 mHz/s. - Changed disturbance recorder maximum digital channel amount from 32 to 95. - Added residual current coarse and fine measurement data to disturbance recorder description. - Event read mode parameter added to Modbus description. - HSO1 and HSO2 connection swapped in arc protection card (was way wrong before). - Updated I01 and I02 rated current range. - Added inches to Dimensions and installation chapter. - Added raising frames, wall mounting bracket, combiflex frame to order code. - Added logical input and logical output function descriptions. - Additions to Abbreviations chapter. - Added button test description to Local panel structure chapter. - Added note to Configuring user levels and passwords chapter that AQ-250 frame units generate a time-stamped event from locking and unlocking user levels. - Added note to Configuring user levels and passwords chapter that user level with a password automatically locks itself after 30 minutes of inactivity. - Added more "Tripped stage" indications and fault types to Measurement value recorder function. - Updated: Digital input activation and release threshold setting ranges and added drop-off delay setting. - Added sample rate to voltage and current measurement tech data. - Fixed overvoltage, undervoltage, neutral overvoltage and sequence voltage stage misspelled IDMT curve formula. - Z< removed from the Connections images. - Note added to power protection tech data.
Revision	2.04
Date	8.6.2021
Changes	- Increased the consistency in terminology - Various image upgrades - Visual update to the order codes
Revision	2.05
Date	22.6.2021

Changes	- Fixed phase current measurement continuous thermal withstand from 30A to 20A. - Fixed lots of timing errors written to registers table. "Prefault" is -200 ms from Start event, "Pretrigger" is -20 ms from trip (or start if fault doensn't progress to trip), "Fault" is start (or trip if fault doesn't progress to trip). - Added event history technical data
Revision	2.06
Date	21.6.2022
Changes	- Improved descriptions generally in many chapters. - Improved readability of a lot of drawings and images. - Order codes have been revised. - Added pole slip function description. - Added inadvertent energizing function description. - Added LN mode parameters to all functions (On, Blocked, Test, Test/Blocked, Off). - Added color themes parameter description. - Improved color sleep mode description. - Improved alarm function color behavior description and images. - Added operation time with different measurement values vs setting ratio in instant operation mode to non-directional overcurrent function description. - Fixed bias calculation formula for restricted earth fault function. Was correctly in the code, just written wrong in the manual. - Added power measurement side selection to power functions. - Added 30 s pretriggering time for disturbance recorder (AQ-250 devices only). - Added new trip detections and fault types to measurement value recorder. - Added user description parameter descriptions for digital inputs, digital outputs, logical inputs, logical outputs and GOOSE inputs. - Arc point sensor HSO1 and HSO2 position fixed. - Added spare part codes and compatibilities to option cards.
Revision	2.07
Date	7.7.2022
Changes	- Added THD voltage measurements. - Fixed number of logical inputs. - Added common signals function description. - Added PTP time synchronization description. - Added Modbus Gateway description.
Revision	2.08
Date	8.9.2022
Changes	- Added stage forcing parameter to function descriptions. - Fixes to "Real time signals to comm" description. - Added "Ethernet port" parameter description to IEC61850, IEC104 and Modbus TCP descriptions. - Removed "Measurement update interval" settings from Modbus description. No longer in use. - Renamed "System integration" chapter to "Communication" and restructured the chapters to be closer to how they are in the menus. - Added "Event logger" chapter. - Added more descriptions to new IEC 61850 ed2 GOOSE parameters. - Added "Condition monitoring / CB wear" description to object description. - Added "User button" description. - Added logical device and logical node mode descriptions.

© Arcteq Relays Ltd

Revision	2.09
Date	14.3.2023
Changes	- Updated the Arcteq logo on the cover page and refined the manual's visual look. - Added the "Safety information" chapter and changed the notes throughout the document accordingly. - Changed the "IED user interface" chapter's title to "Device user interface" and replaced all 'IED' terms with 'device' or 'unit'. - Updated the rated values for the change-over CPU digital outputs in "Technical data". - Updated the input impedance for the voltage measurement module in "Technical data". - Added double ethernet port configuration parameters to "Connections menu" chapter. - Added event overload detection description to "Event logger" chapter.
Revision	2.10
Date	19.6.2023
Changes	
Revision	2.11
Date	29.11.2023
Changes	- Added the 5 ms update time in the measurement chapters. - Added spring lock cage options for connectors. See the "Ordering information" chapter. - Added underexcitation protection function. - Updated the contact address for technical support in the "Contact and reference information" chapter. - Circuit breaker wear is not integrated to the objects.
Revision	2.12
Date	January 2024
Changes	- Added Chinese and Kazakh languages as language options in "General menu".
Revision	2.13
Date	September 2024
Changes	- Added 5th harmonic maximum uptime parameter to transformer differential protection function. - Corrected the number of devices that fit a 19 in rack in the "Dimensions and installation" chapter.
Revision	2.14
Date	June 2025
Changes	- Increased phase current measurement range. See the current measurement section in the Technical data chapter. - Added clarification that transformer differential protection can be used for motor differential protection. - Updated the product and packaging weights. - Added new "User access control" description. - Added circuit breaker wear to "Object control and monitoring" description. - Added "High-speed and high-current output" option card description. - Added "Milliampere input module (4x mA in & 1x mA out)" option card description. - Added "Double SFP Ethernet & IRIG-B communication module" option card description. - Order code table updated.

Revision	2.15
Date	January 2026
Changes	- Updated the Connections images. - Updated the make-and-carry of the Point sensor arc protection module.
Revision	2.16
Date	June 2026
Changes	- General improvements to descriptions. - IEC61850 integration time description improved. - Added CBW abrasion (SCBR) calculation description. - Added measurements to Programmable stages. - Added "Dynamic S Dependent" mode description to Underexcitation protection. - Added OPCUA communication protocol.
Revision	2.17
Date	October 2026
Changes	- Updated function blocking description for non-directional overcurrent, non-directional earth fault , directional overcurrent and directional earth fault. - Added a parameter to the thermal image settings in the Machine thermal overload protection (TM>; 49M) chapter. Added Integration time chapter. - Added a list to explain which measurements are affected by deadband settings to IEC61850, IEC101/104 and DNP3 chapters. - Added permission list for each user level in User access control chapter.

1.2 Version 1 revision notes

Table. 1.2 - 2. Version 1 revision notes

Revision	1.00
Date	13.4.2016
Changes	• The first revision for AQ-M257.
Revision	1.01
Date	10.2.2017
Changes	• Order code updated.
Revision	1.02
Date	5.1.2018

© Arcteq Relays Ltd
IM00021

Changes	• Measurement value recorder description added. • ZCT connection added to the current measurement description. • Internal harmonics blocking added to the I>, I0>, and I0dir> function descriptions. • Non-standard delay curves added. • Event lists revised on several functions. • RTD & mA card description improvements. • Ring-lug CT card option description added. • Fault view description added. • New U> and U< function measurement modes documented. • Order code revised.
Revision	1.03
Date	14.8.2018
Changes	• Added the mA output option card description and updated the order code. • Added the HMI display technical data.

1.3 Safety information

This document contains important instructions that should be saved for future use. Read the document carefully before installing, operating, servicing, or maintaining this equipment. Please read and follow all the instructions carefully to prevent accidents, injury and damage to property.

Additionally, this document may contain four (4) types of special messages to call the reader's attention to useful information as follows:

NOTICE!
"Notice" messages indicate relevant factors and conditions to the concept discussed in the text, as well as to other relevant advice.

CAUTION!
"Caution" messages indicate a potentially hazardous situation which, if not avoided, **could** result in minor or moderate personal injury, in equipment/property damage, or software corruption.

WARNING!
"Warning" messages indicate a potentially hazardous situation which, if not avoided, **could** result in death or serious personal injury as well as serious damage to equipment/property.

DANGER!
"Danger" messages indicate an imminently hazardous situation which, if not avoided, **will** result in death or serious personal injury.

These symbols are added throughout the document to ensure all users' personal safety and to avoid unintentional damage to the equipment or connected devices.

Please note that although these warnings relate to direct damage to personnel and/or equipment, it should be understood that operating damaged equipment may also lead to further, indirect damage to personnel and/or equipment. Therefore, we expect any user to fully comply with these special messages.

1.4 Abbreviations

AI – Analog input

AR – Auto-recloser

ASDU – Application service data unit

AVR – Automatic voltage regulator

BCD – Binary-coded decimal

CB – Circuit breaker

CBFP – Circuit breaker failure protection

CLPU – Cold load pick-up

CPU – Central processing unit

CT – Current transformer

CTM – Current transformer module

CTS – Current transformer supervision

DG – Distributed generation

DHCP – Dynamic Host Configuration Protocol

DI – Digital input

DO – Digital output

DOL – Direct-on-line

DR – Disturbance recorder

DT – Definite time

FF – Fundamental frequency

FFT – Fast Fourier transform

FTP – File Transfer Protocol

GI – General interrogation

HMI – Human-machine interface

HR – Holding register

HV – High voltage

HW – Hardware

IDMT – Inverse definite minimum time

IGBT – Insulated-gate bipolar transistor

© Arcteq Relays Ltd
IM00021

I/O – Input and output

IRIG-B – Inter-range instruction group, timecode B

LCD – Liquid-crystal display

LED – Light emitting diode

LV – Low voltage

NC – Normally closed

NO – Normally open

NTP – Network Time Protocol

RMS – Root mean square

RSTP – Rapid Spanning Tree Protocol

RTD – Resistance temperature detector

RTU – Remote terminal unit

SCADA – Supervisory control and data acquisition

SG – Setting group

SOTF – Switch-on-to-fault

SW – Software

THD – Total harmonic distortion

TRMS – True root mean square

VT – Voltage transformer

VTM – Voltage transformer module

VTS – Voltage transformer supervision

2 General

The AQ-M257 motor protection device is a member of the AQ 250 product line. The hardware and software are modular: the hardware modules are assembled and configured according to the application's I/O requirements and the software determines the available functions. This manual describes the specific application of the AQ-M257 motor protection device. For other AQ 200 and AQ 250 series products please consult their respective device manuals.

AQ-M257 offers a modular motor protection and control solution for asynchronous or synchronous motors requiring differential protection. There are up to nine (9) option card slots available for additional I/O or communication cards for more comprehensive monitoring and control applications. AQ-M257 communicates using various protocols including the IEC 61850 substation communication standard.

© Arcteq Relays Ltd
IM00021

3 Device user interface

3.1 Local panel structure

The front panel of AQ-250 series devices have multiple LEDs, control buttons and a local RJ-45 Ethernet port for configuration. Each unit is also equipped with an RS-485 serial interface and an RJ-45 Ethernet interface on the back of the device.

Figure. 3.1 - 1. Local panel structure.

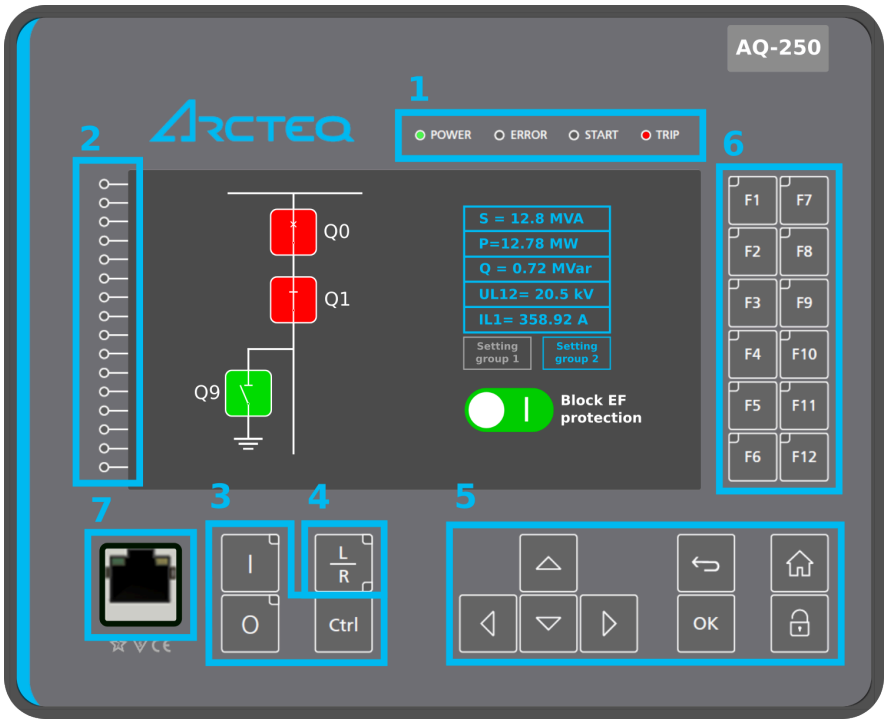

1. Four (4) default LEDs: "Power", "Error", "Start" (configurable) and "Trip" (configurable).
2. Sixteen (16) freely configurable LEDs (red, orange, green) with programmable legend texts.
3. Three (3) object control buttons: Choose the controllable object with the **Ctrl** button and control the breaker or other object with the **I** and the **O** buttons.
4. The **L/R** button switches between the local and the remote control modes.
5. Eight (8) buttons for device local programming: the four navigation arrows, the **Back** and the **OK** buttons, the **Home** and the password activation buttons).
6. Twelve (12) freely configurable function buttons (F1…F12). Each button has a freely configurable LED (red, orange, green).
7. One (1) RJ-45 Ethernet port for device configuration.

When the unit is powered on, the green "Power" LED is lit. When the red "Error" LED is lit, the device has an internal (hardware or software) error that affects the operation of the unit. The activation of the yellow "Start" LED and the red "Trip" LED are based on the setting the user has put in place in the software.

The sixteen freely configurable LEDs are located on the left side of the display. Their activation and color (green, orange, red) are based on the settings the user has put in place in the software.

The view in the screen is freely configurable. Virtual switches and buttons can be added which can be used to change the setting groups or control the device's general logic locally or remotely. The status of the object (circuit breaker, disconnector) can be displayed on the screen. All measured and calculated values regardless of the magnitude catecory (current, voltage, power, energy, frequency, etc.) can be shown on the screen.

Holding the I (Object Control) button for five seconds opens the "Button Test" menu. This menu displays all physical buttons on the device's front panel. Pressing a button marks it as tested. Once all buttons have been tested, the device automatically performs an LED test and displays its internal voltage. Press the OK button to exit the LED test and return to normal operation.

© Arcteq Relays Ltd

4 Functions

4.1 Functions included in AQ-M257

The AQ-M257 motor protection device includes the following functions as well as the number of stages for those functions.

Table. 4.1 - 3. Protection functions of AQ-M257.

				Function package		
Name (number of stages)	IEC	ANSI	Description	A	B	C
NOC (4)	I> I>> I>>> I>>>>	50/51	Non-directional overcurrent protection	X	X	X
DOC (4)	Idir> Idir>> Idir>>> Idir>>>>	67	Directional overcurrent protection	X	X	X
NEF (4)	I0> I0>> I0>>> I0>>>>	50N/51N	Non-directional earth fault protection	X	X	X
DEF (4)	I0dir> I0dir>> I0dir>>> I0dir>>>>	67N/32N	Directional earth fault protection	X	X	X
OV (4)	U> U>> U>>> U>>>>	59	Overvoltage protection	X	X	X
UV (4)	U< U<< U<<< U<<<<	27	Undervoltage protection	X	X	X
NOV (4)	U0> U0>> U0>>> U0>>>>	59N	Neutral overvoltage protection	X	X	X
FRQV (8)	f> f>> f>>> f>>>> f< f<< f<<<< f<<<<<	81O/81U	Overfrequency and underfrequency protection	X	X	X

ROCOF (8)	df/dt>/< (1...8)	81R	Rate-of-change of frequency	X		
CUB (4)	I2> I2>>> I2>>>> I2>>>>>	46/46R/ 46L	Negative sequence overcurrent/ phase current reversal/ current unbalance protection	X	X	X
VUB (4)	U1/U2>/< U1/U2>>/<< U1/U2>>>/<<<< U1/U2>>>>/<<<<<	47/27P/ 59PN	Sequence voltage protection	X	X	X
HOC (4)	Ih> Ih>>> Ih>>>> Ih>>>>>	50H/51H/ 68H	Harmonic overcurrent protection	X	X	X
CBFP (1)	CBFP	50BF/ 52BF	Circuit breaker failure protection	X	X	X
REF (1)	I0d>	87N	Low-impedance or high-impedance restricted earth fault/ cable end differential protection	X	X	X
MST	-	-	Motor status monitoring	X	X	X
DIF (1)	Idb>/Idi>/I0dHV>/I0dLV>	87T/87G/ 87M/87N	Generator/ motor / transformer differential protection with integrated restricted earth fault protection	X	X	X
TOLM (1)	TM>	49M	Machine thermal overload protection	X	X	X
UEX (1)	Q<	40	Underexcitation protection		X	X
LCR (1)	Ist>	48/14	Motor start/locked rotor monitoring	X	X	X
FSP (1)	N>	66	Frequent start protection	X	X	X
NUC (1)	I<	37	Non-directional undercurrent protection	X	X	X
MJP (1)	Im>	50M/51M	Mechanical jam protection	X	X	X
UPF (1)	PF<	55	Power factor protection		X	X
RTD (1...16)	-	-	RTD alarms (Resistance temperature detector)	X	X	X
PQS (4)	P, Q, S>/<< P, Q, S>>/<<<< P, Q, S>>>/<<<<<< P, Q, S>>>>/<<<<<<<<	32	Power protection	X	X	X
UIM (2)	Z< Z<<	21U	Underimpedance protection		X	X
URX (2)	X<< X<<<	21X	Under-reactance protection		X	X
VOC (1)	Iv>	51V	Voltage-restrained overcurrent protection		X	X
IAE (1)	I> U<	50/27	Inadvertent energizing protection		X	X
VHZ (1)	V/Hz>	24	Volts-per-hertz overexcitation protection	X	X	X

© Arcteq Relays Ltd

OOS (1)	Pslip	78	Pole slip protection		X	X
PGS (1)	PGx>/<	99	Programmable stage	X	X	X
ARC (1)	IArc>/I0Arc>	50Arc/ 50NArc	Arc fault protection (optional)	X	X	X

Table. 4.1 - 4. Control functions of AQ-M257.

				Function package		
Name (number of stages)	IEC	ANSI	Description	A	B	C
SGS	-	-	Setting group selection (8 setting groups available)	X	X	X
OBJ	-	-	Object control and monitoring (10 objects available)	X	X	X
CIN	-	-	Indicator object monitoring (10 indicators available)	X	X	X
VJP	Δφ	78	Vector jump		X	X

Table. 4.1 - 5. Monitoring functions of AQ-M257.

				Function package		
Name (number of stages)	IEC	ANSI	Description	A	B	C
CTS (2)	-	-	Current transformer supervision	X	X	X
VTS	-	-	Voltage transformer supervision	X	X	X
THD	-	-	Current total harmonic distortion.	X	X	X
THDV	-	-	Voltage total harmonic distortion.	X	X	X
CBW	-	-	Circuit breaker wear monitor	X	X	X
DR	-	-	Disturbance recorder	X	X	X
RHC	-	-	Running hour counter	X	X	X
MREC	-	-	Measurement recorder	X	X	X
VREC	-	-	Fault register	X	X	X

4.2 Measurements

4.2.1 Current measurement and scaling in differential applications

The current measurement module (CT module, or CTM) is used for measuring the currents from current transformers. The current measurements are updated every 5 milliseconds. The measured values are processed into the measurement database and they are used by measurement and protection functions. It is essential to understand the concept of current measurements to be able to get correct measurements.

Figure. 4.2.1 - 2. Current measurement terminology.

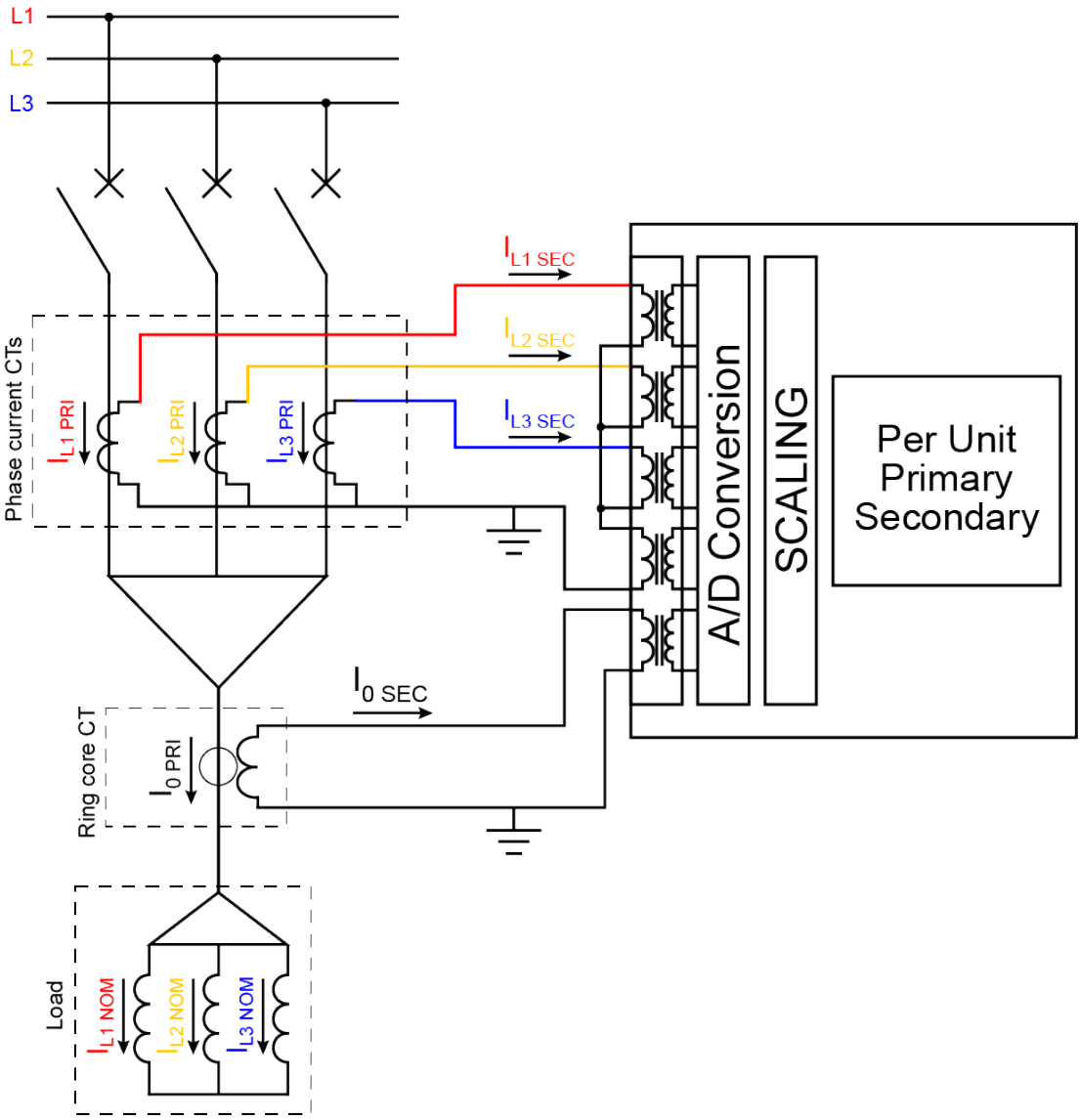

PRI: The primary current, i.e. the current which flows in the primary circuit and through the primary side of the current transformer.

SEC: The secondary current, i.e. the current which the current transformer transforms according to its ratios. This current is measured by the device.

NOM: The nominal primary current of the protected transformer. The nominal current on the HV side differs from that on the LV side according to the transformer voltage ratio. The nominal current is calculated based on the transformer's MVA and the nominal voltage on each winding.

© Arcteq Relays Ltd
IM00021

For the measurements to be correct the user needs to ensure that the measurement signals are connected to the correct inputs, that the current direction is connected correctly, and that the scaling is set correctly.

The device calculates the scaling factors based on the set values of the CT primary, the CT secondary and the nominal current. The device measures the secondary current, the current output from the current transformer installed into application's primary circuit. The rated primary and secondary currents of the CT need to be set for the device to "know" the primary and per-unit values. In power transformers, the protected unit's nominal current in both windings is calculated based on the given nominal power (MVA) and the nominal voltage. The settings can only give the apparatus nominal in p.u. (per-unit) when the nominal current is known. Also, knowing what the transformer's nominal current is makes the unit protection much easier and more straightforward to configure. In modern protection devices this scaling calculation is done internally after the current transformer's primary current, secondary current and machine nominal current are set.

Figure. 4.2.1 - 3. Nominal current calculation in differential protection devices.

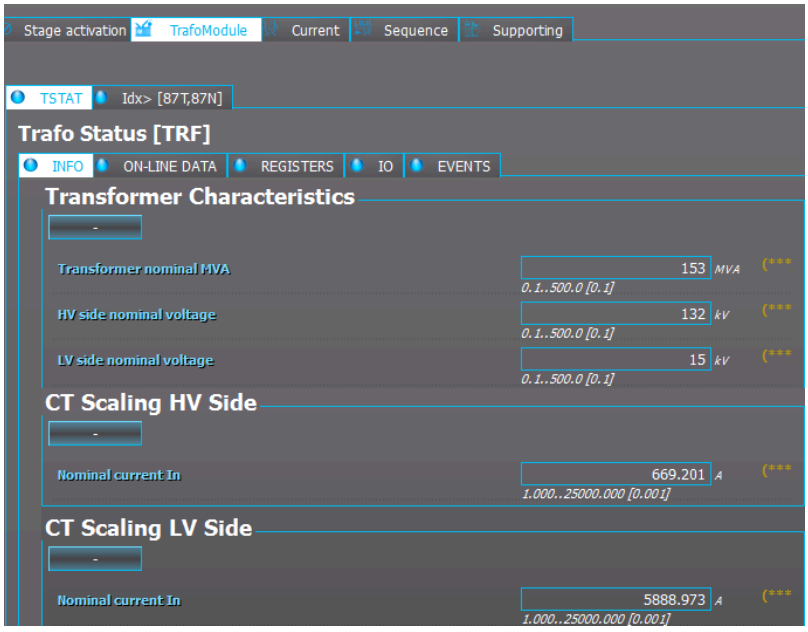

Example of CT scaling (application 1)

The following figure presents how CTs are connected to the device's measurement inputs. It also shows the CT ratings and the transformer nominal current. Note that S1 is always connected to an odd connector regardless of the CT direction. The CT direction is selected in the settings of the transformer differential protection function.

Figure. 4.2.1 - 4. Connections (application 1).

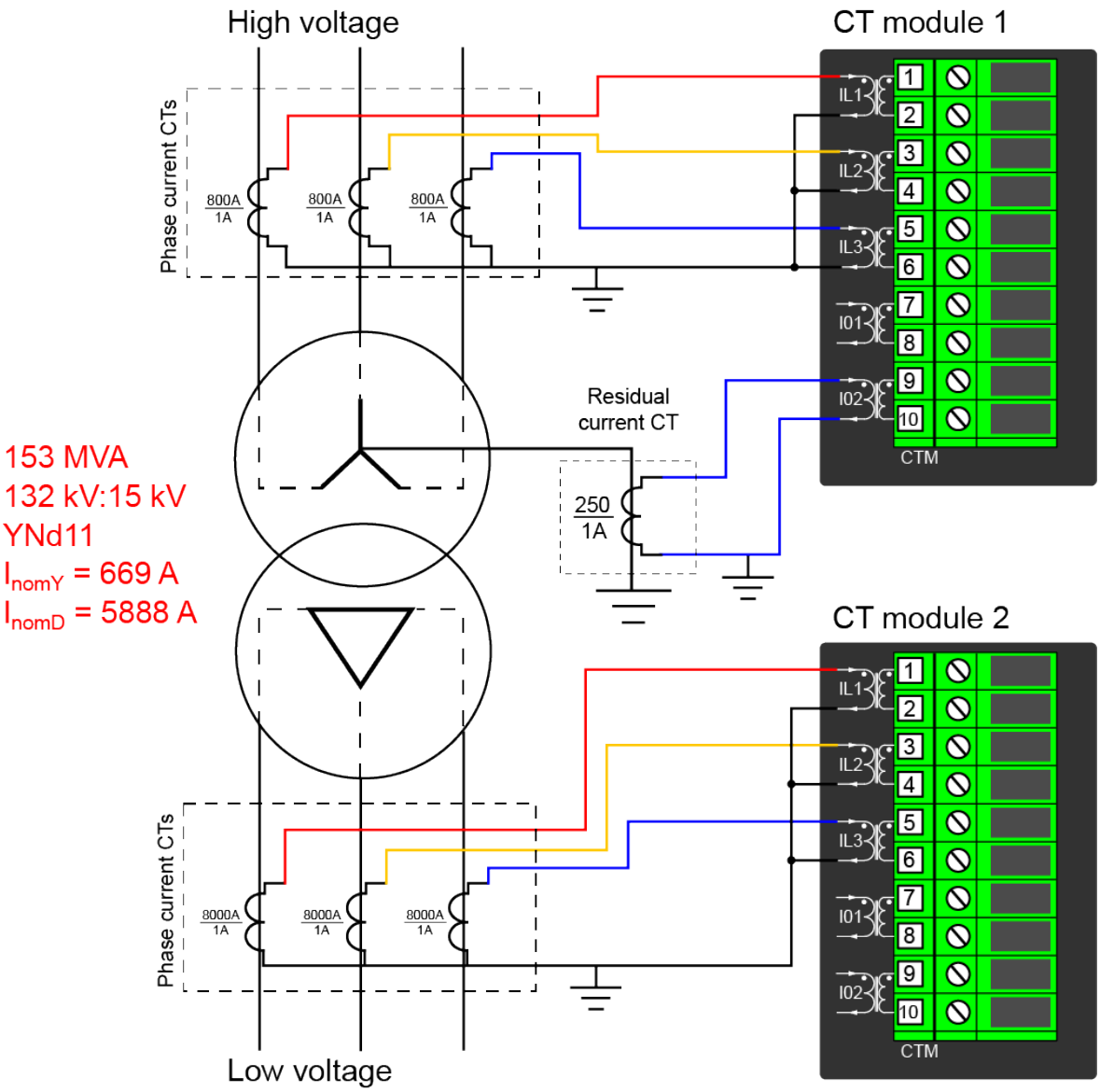

Because of the direction of the CTs and because the CTs' P1/S1 side is always wired to the modules's odd inputs, the "Differential calculation mode" setting has to be set to "Subtract" (*Protection → TrafoModule → Idx> [87T,87N] → Settings*). This way the direction of the measured currents are checked correctly from the device's perspective.

The following table presents the initial data of the connection as well as the ratings.

Table. 4.2.1 - 6. Initial data.

High-voltage side CT: • CT primary: 800 A • CT secondary: 1 A High-voltage side nominal current: 669 A	Ring core CT in Input I02: • 3I0CT primary: 250 A • 3I0CT secondary: 1 A	Low-voltage side CT: • CT primary: 8 000 A • CT secondary: 1 A Low-voltage side nominal current: 5 888 A
• Both CTs are pointing through the transformer (HV-S2 and LV-S2 are pointing in the same direction).		

© Arcteq Relays Ltd
IM00021

The nominal current for both the HV and LV sides of the protected transformer are calculated based on the values set in the *Transformer characteristics* menu (*Protection → TrafoModule → TSTAT → INFO*). The ratio between the CT modules 1 and 2 can be set in their respective tabs at *Measurement → Transformers*. The per-unit scaling ("Scale meas. to In") is automatically set to "Object in p.u." in all machine protection devices and it cannot be changed.

Figure. 4.2.1 - 5. Phase CT scaling to machine nominal.

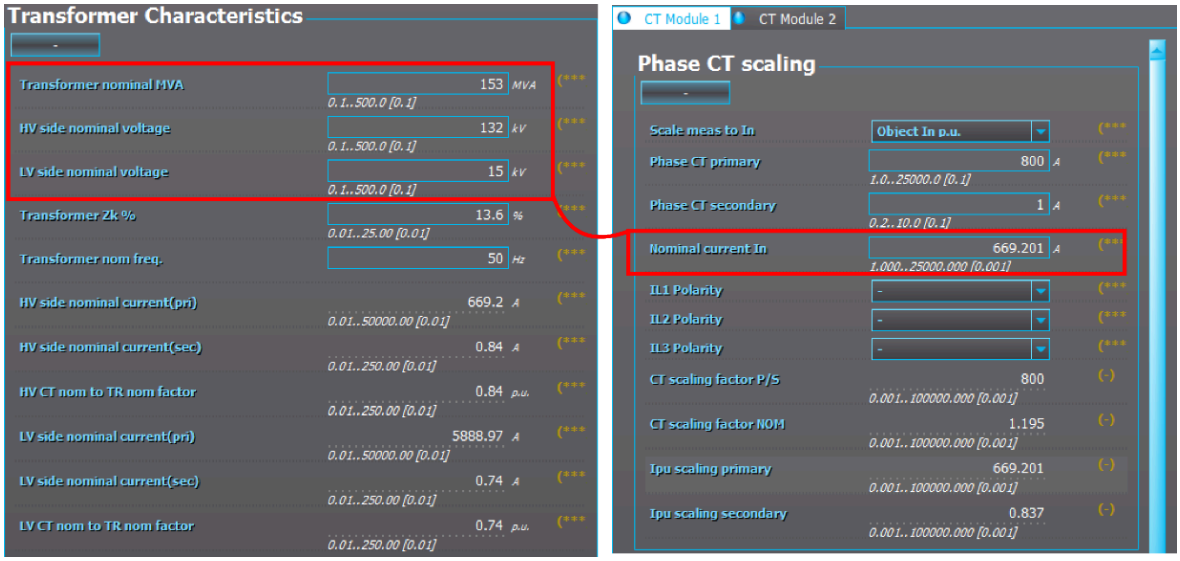

As seen in the image above, device calculates both the HV side nominal current (669.2 A) and the LV side nominal current (5,888.97 A). The nominal current calculations are done according to the following formulas:

$$\text{HV side nominal current (pri)} = \frac{trafo_{nom}/3}{U_{HV}/\sqrt{3}} = \frac{153\,000\,000/3}{132\,000/\sqrt{3}} \approx 669.201\ \text{A}$$

$$\text{LV side nominal current (pri)} = \frac{trafo_{nom}/3}{U_{LV}/\sqrt{3}} = \frac{153\,000\,000/3}{15\,000/\sqrt{3}} \approx 5888.97\ \text{A}$$

The HV and LV side nominal current can also be calculated in per unit values as follows:

$$\text{HV CT nom to TR nom factor} = \frac{HV\ side\ nominal\ current\ (pri)}{Phase\ CT\ primary} = \frac{669.2\ \text{A}}{800\ \text{A}} \approx 0.84\ \text{p.u.}$$

$$\text{LV CT nom to TR nom factor} = \frac{LV\ side\ nominal\ current\ (pri)}{Phase\ CT\ primary} = \frac{5888.97\ \text{A}}{8000\ \text{A}} \approx 0.74\ \text{p.u.}$$

The secondary nominal current (in amperes) is the result of multiplying the per unit value with the phase CT secondary side current. This current can be used when the unit is commissioned and when the directions of CTs are checked. See the example calculation below:

$$\text{HV side nominal current (sec)}$$
$$= HV\ CT\ nom\ to\ TR\ nom\ factor \times Phase\ CT\ secondary = 0.84\ \text{p.u.} \times 1\ \text{A} = 0.84\ \text{A}$$

$$\text{LV side nominal current (sec)}$$
$$= LV\ CT\ nom\ to\ TR\ nom\ factor \times Phase\ CT\ secondary = 0.74\ \text{p.u.} \times 1\ \text{A} = 0.74\ \text{A}$$

In case the phase current CTs are connected to the module via a Holmgren (summing) connection, the use of coarse residual current measurement settings is required: the "I01 CT" settings are set according to the phase current CTs' ratings (800/1 A).

Figure. 4.2.1 - 6. Residual I01 CT scaling (coarse).

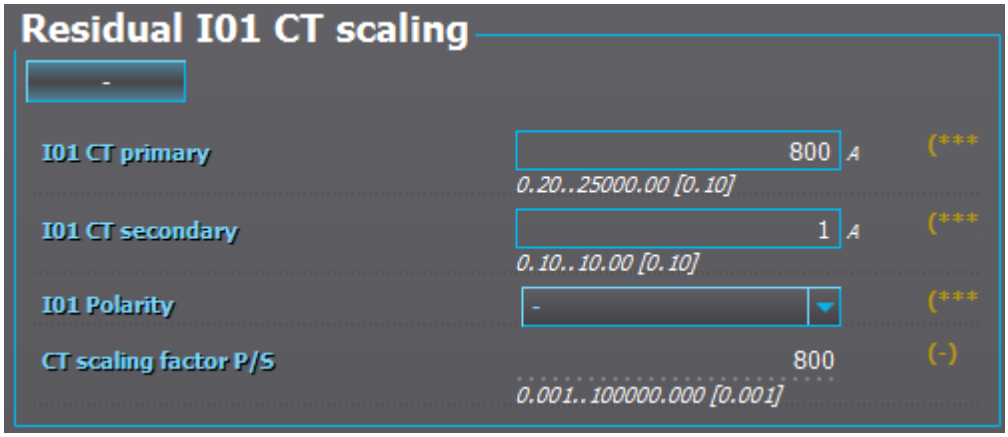

The residual current CT is connected to the first CTM directly, which requires the use of sensitive residual current measurement settings: the "Residual I02 CT scaling" settings are set according to the residual current CT's ratings (250/1 A).

Figure. 4.2.1 - 7. Residual I02 CT scaling (sensitive).

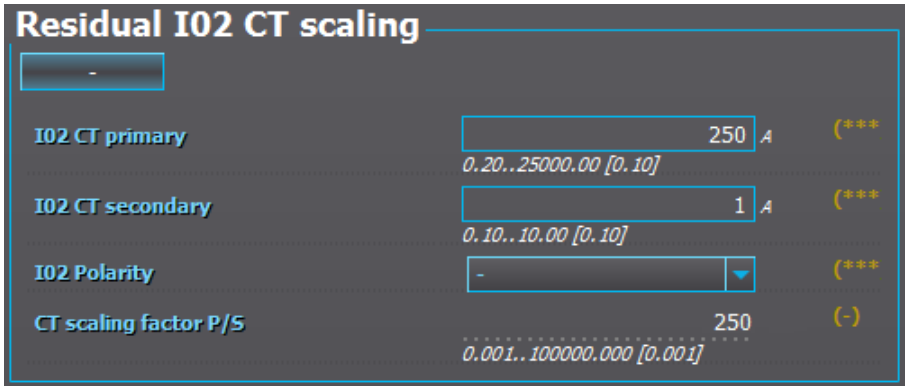

Example of CT scaling (application 2)

The following figure presents how the CTs are connected to the device's measurement inputs. It also shows the CT ratings and the transformer nominal current. Note that S1 is always connected to an odd connector regardless of the CT direction. The CT direction is selected in the settings of the transformer differential protection function.

© Arcteq Relays Ltd
IM00021

Figure. 4.2.1 - 8. Connections (application 2).

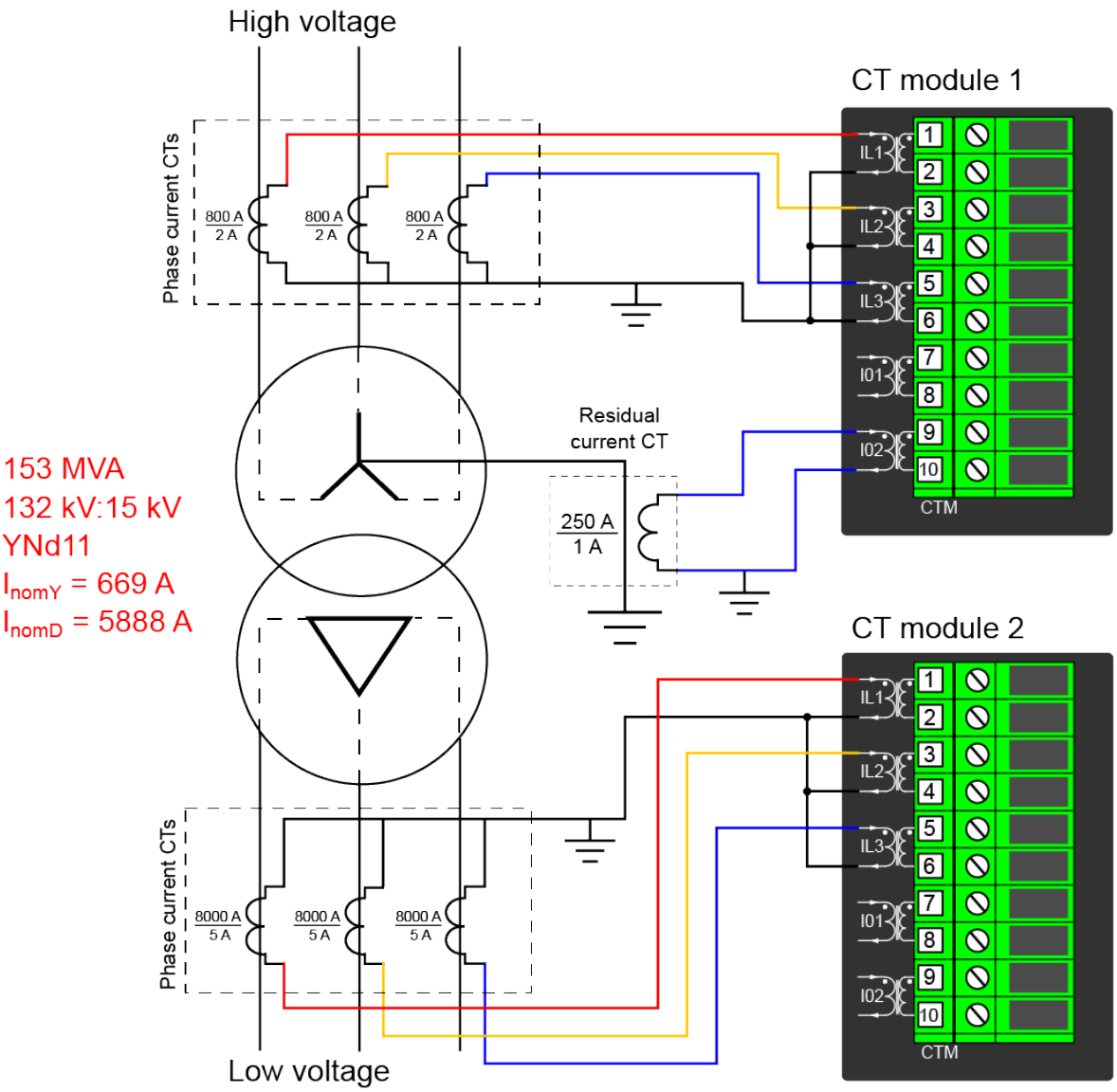

Because of the direction of the CTs and because the CTs' P1/S1 side is always wired to the modules's odd inputs, the "Differential calculation mode" has to be set to "Add" (*Protection → TrafoModule → Idx> [87T,87N] → Settings*). The difference with the first application is that here the CTs point towards the protected object instead of pointing through it.

The following table presents the initial data of the connection as well as the ratings.

Table. 4.2.1 - 7. Initial data.

Machine nominal power: 153 MVA Machine high voltage side nominal amplitude: 132 kV Machine low voltage side nominal amplitude: 15 kV		
High voltage side CT: • CT primary: 800 A • CT secondary: 2 A High-voltage side nominal current: 669 A	Residual current CT in Input I02: • 3I0CT primary: 250 A • 3I0CT secondary: 1 A	Low voltage side CT. • CT primary: 8 000 A • CT secondary: 5 A Low-voltage side nominal current: 5 888 A

- Both CTs are pointing towards the protected object (HV-S2 and LV-S2 are pointing at each other).

The nominal currents on both the HV and the LV sides are the same as in Application 1. However, the CTs' secondary current levels have been changed to 2 A (on the HV side) and to 5 A (on the LV side). The nominal currents are still calculated the same way:

$$\text{HV side nominal current (pri)} = \frac{trafo_{nom}/3}{U_{HV}/\sqrt{3}} = \frac{153\,000\,000/3}{132\,000/\sqrt{3}} \approx 669.201\ \text{A}$$

$$\text{LV side nominal current (pri)} = \frac{trafo_{nom}/3}{U_{LV}/\sqrt{3}} = \frac{153\,000\,000/3}{15\,000/\sqrt{3}} \approx 5888.97\ \text{A}$$

The HV and LV side nominal current can also be calculated in per unit values as follows:

$$\text{HV CT nom to TR nom factor} = \frac{HV\ side\ nominal\ current\ (pri)}{Phase\ CT\ primary} = \frac{669.2\ \text{A}}{800\ \text{A}} \approx 0.84\ \text{p.u.}$$

$$\text{LV CT nom to TR nom factor} = \frac{LV\ side\ nominal\ current\ (pri)}{Phase\ CT\ primary} = \frac{5888.97\ \text{A}}{8000\ \text{A}} \approx 0.74\ \text{p.u.}$$

The secondary nominal current (in amperes) is the result of multiplying the per unit value with the phase CT secondary side current. This current can be used when the unit is commissioned and when the directions of CTs are checked. In Application 2 it is necessary to inject higher amplitudes to the CTs via the secondary injection tool in order to reach the nominal currents. See the example calculation below:

$$\text{HV side nominal current (sec)}$$
$$= HV\ CT\ nom\ to\ TR\ nom\ factor \times Phase\ CT\ secondary = 0.84\ \text{p.u.} \times 2\ \text{A} = 1.68\ \text{A}$$

$$\text{LV side nominal current (sec)}$$
$$= LV\ CT\ nom\ to\ TR\ nom\ factor \times Phase\ CT\ secondary = 0.74\ \text{p.u.} \times 5\ \text{A} = 3.70\ \text{A}$$

Settings

Table. 4.2.1 - 8. Settings of the Phase CT scaling.

Name	Unit	Range	Step	Default	Description
Scale measurement to In	-	• CT nom p.u. • Object In p.u.	-	• CT nom p.u.	The selection of the reference used in the device's per-unit system scaling. Either the set phase current CT primary or the protected object's nominal current. CAUTION! Not applicable in machine protection!
Phase CT primary	A	1…25 000	0.001	100	The rated primary current of the current transformer.

© Arcteq Relays Ltd
IM00021

Name	Unit	Range	Step	Default	Description
Phase CT secondary	A	0.2…10	0.001	5	The rated secondary current of the current transformer.
Nominal current In	A	1…25 000	0.001	100	The nominal current of the protected object. This setting is only visible if the option "Object In p.u." has been selected in the "Scale meas. to In" setting.
IL1 Polarity	-	• - • Invert	-	• -	The selection of the first current measurement channel's (IL1) polarity (direction). The default setting is for the positive current to flow from connector 1 to connector 2, with the secondary currents' starpoint pointing towards the line.
IL2 Polarity	-	• - • Invert	-	• -	The selection of the second current measurement channel's (IL2) polarity (direction). The default setting is for the positive current to flow from connector 3 to connector 4, with the secondary currents' starpoint pointing towards the line.
IL3 Polarity	-	• - • Invert	-	• -	The selection of the third current measurement channel's (IL3) polarity (direction). The default setting is for the positive current to flow from connector 5 to connector 6, with the secondary currents' starpoint pointing towards the line.
CT scaling factor P/S	-	-	-	-	A feedback value; the calculated scaling factor that is the ratio between the primary current and the secondary current.
CT scaling factor NOM	-	-	-	-	A feedback value; the calculated scaling factor that is the ratio between the set primary current and the set nominal current.
Ipu scaling primary	-	-	-	-	A feedback value; the scaling factor for the primary current's per-unit value.
Ipu scaling secondary	-	-	-	-	A feedback value; the scaling factor for the secondary current's per-unit value.

Table. 4.2.1 - 9. Settings of the Residual I01 CT scaling.

Name	Unit	Range	Step	Default	Description
I01 CT primary	A	0.2…25 000	0.000 01	100	The rated primary current of the current transformer.
I01 CT secondary	A	0.1…10	0.000 01	1.0	The rated secondary current of the current transformer.

Name	Unit	Range	Step	Default	Description
I01 Polarity	-	• - • Invert	-	-	The selection of the coarse residual measurement channel's (I01) polarity (direction). The default setting is for the positive current to flow from connector 7 to connector 8.
CT scaling factor P/S	-	-	-	-	A feedback value; the calculated scaling factor that is the ratio between the primary current and the secondary current.

Table. 4.2.1 - 10. Settings of the Residual I02 CT scaling.

Name	Unit	Range	Step	Default	Description
I02 CT primary	A	1…25 000	0.000 01	100	The rated primary current of the current transformer.
I02 CT secondary	A	0.001…10	0.000 01	0.2	The rated secondary current of the current transformer.
I02 Polarity	-	• - • Invert	-	-	The selection of the sensitive residual measurement channel's (I02) polarity (direction). The default setting is for the positive current to flow from connector 9 to connector 10.
CT scaling factor P/S	-	-	-	-	A feedback value; the calculated scaling factor that is the ratio between the primary current and the secondary current.

Measurements

The following measurements are available in the measured current channels.

Table. 4.2.1 - 11. Per-unit phase current measurements.

Name	Unit	Range	Step	Description
Pha.curr.ILx	× In	0.000…1 250.000	0.001	The RMS current measurement (in p.u.) from each of the phase current channels.
Pha.curr.ILx TRMS	× In	0.000…1 250.000	0.001	The TRMS current (inc. harmonics up to 31st) measurement (in p.u.) from each of the phase current channels.
P-P curr.ILx	× In	0.000…500.000	0.001	The peak-to-peak current measurement (in p.u.) from each of the phase current channels.

Table. 4.2.1 - 12. Primary phase current measurements.

Name	Unit	Range	Step	Description
Pri.Pha.curr.ILx	A	0.000…1 000 000.000	0.001	The primary RMS current measurement from each of the phase current channels.
Pha.curr.ILx TRMS Pri	A	0.000…1 000 000.000	0.001	The primary TRMS current (inc. harmonics up to 31st) measurement from each of the phase current channels.

© Arcteq Relays Ltd
IM00021

Table. 4.2.1 - 13. Secondary phase current measurements.

Name	Unit	Range	Step	Description
Sec.Pha.curr.ILx	A	0.000…300.000	0.001	The primary RMS current measurement from each of the phase current channels.
Pha.curr.ILx TRMS Sec	A	0.000…300.000	0.001	The primary TRMS current (inc. harmonics up to 31st) measurement from each of the phase current channels.

Table. 4.2.1 - 14. Phase current angle measurements.

Name	Unit	Range	Step	Description
Pha.angle ILx	deg	0.000…360.000	0.001	The phase angle measurement from each of the three phase current inputs.

Table. 4.2.1 - 15. Per-unit residual current measurements.

Name	Unit	Range	Step	Description
Res.curr.I0x	× In	0.000…1 250.000	0.001	The RMS current measurement (in p.u.) from the residual current channel I01 or I02.
Calculated I0	× In	0.000…1 250.000	0.001	The RMS current measurement (in p.u.) from the calculated I0 current channel.
Res.curr.I0x TRMS	× In	0.000…1 250.000	0.001	The TRMS current (inc. harmonics up to 31st) measurement (in p.u.) from the residual current channel I01 or I02.
P-P curr.I0x	× In	0.000…500.000	0.001	The peak-to-peak current measurement (in p.u.) from the residual current channel I01 or I02.

Table. 4.2.1 - 16. Primary residual current measurements.

Name	Unit	Range	Step	Description
Pri.Res.curr.I0x	A	0.000…1 000 000.000	0.001	The primary RMS current measurement from the residual current channel I01 or I02.
Pri.calc.I0	A	0.000…1 000 000.000	0.001	The primary RMS current measurement from the calculated current channel I0.
Res.curr.I01 TRMS Pri	A	0.000…1 000 000.000	0.001	The TRMS current (inc. harmonics up to 31st) measurement from the primary residual current channel I01 or I02.

Table. 4.2.1 - 17. Secondary residual current measurements.

Name	Unit	Range	Step	Description
Sec.Res.curr.I0x	A	0.000…300.000	0.001	The secondary RMS current measurement from the residual current channel I01 or I02.

Name	Unit	Range	Step	Description
Sec.calc.I0	A	0.000…300.000	0.001	The secondary RMS current measurement from the calculated current channel I0.
Res.curr.I0x TRMS Sec	A	0.000…300.000	0.001	The secondary TRMS current (inc. harmonics up to 31st) measurement from the secondary residual current channel I01 or I02.

Table. 4.2.1 - 18. Residual current phase angle measurements.

Name	Unit	Range	Step	Description
Res.curr.angle I0x	deg	0.000…360.000	0.001	The residual current angle measurement from the I01 or I02 current input.
Calculated I0 angle	deg	0.000…360.000	0.001	The calculated residual current angle measurement.

Table. 4.2.1 - 19. Per-unit sequence current measurements.

Name	Unit	Range	Step	Description
Positive sequence curr.	× In	0.00…1 250.0	0.001	The measurement (in p.u.) from the calculated positive sequence current.
Negative sequence curr.	× In	0.00…1 250.0	0.001	The measurement (in p.u.) from the calculated negative sequence current.
Zero sequence curr.	× In	0.00…1 250.0	0.001	The measurement (in p.u.) from the calculated zero sequence current.

Table. 4.2.1 - 20. Primary sequence current measurements.

Name	Unit	Range	Step	Description
Pri.Positive sequence curr.	A	0.00…1 000 000.0	0.001	The primary measurement from the calculated positive sequence current.
Pri.Negative sequence curr.	A	0.00…1 000 000.0	0.001	The primary measurement from the calculated negative sequence current.
Pri.Zero sequence curr.	A	0.00…1 000 000.0	0.001	The primary measurement from the calculated zero sequence current.

Table. 4.2.1 - 21. Secondary sequence current measurements.

Name	Unit	Range	Step	Description
Sec.Positive sequence curr.	A	0.000…300.000	0.001	The secondary measurement from the calculated positive sequence current.
Sec.Negative sequence curr.	A	0.000…300.000	0.001	The secondary measurement from the calculated negative sequence current.

© Arcteq Relays Ltd
IM00021

Name	Unit	Range	Step	Description
Sec.Zero sequence curr.	A	0.000…300.000	0.001	The secondary measurement from the calculated zero sequence current.

Table. 4.2.1 - 22. Sequence phase angle measurements.

Name	Unit	Range	Step	Description
Positive sequence curr.angle	deg	0.000…360.0	0.001	The calculated positive sequence current angle.
Negative sequence curr.angle	deg	0.000…360.0	0.001	The calculated negative sequence current angle.
Zero sequence curr.angle	deg	0.000…360.0	0.001	The calculated zero sequence current angle.

Table. 4.2.1 - 23. Harmonic current measurements.

Name	Unit	Range	Step	Default	Description
Harm Abs.pr Perc.	-	• Percent • Absolute	-	Percent	Defines whether the harmonics are calculated as percentage or absolute values.
Harmonics display	-	• Per unit • Primary A • Secondary A	-	Per unit	Defines how the harmonics are displayed: in p.u. values, as primary current values, or as secondary current values.
IxxMaximum harmonic	A	0.000…1 000 000.000	0.001	-	Displays the maximum harmonics value of the selected current input ILx or I0x.
Ixx fundamental	A	0.000…1 000 000.000	0.001	-	Displays the current value of the fundamental frequency measurement (RMS) from the selected current input ILx or I0x.
Ixx harmonics (2nd…31st harmonic)	A	0.000…1 000 000.000	0.001	-	Displays the selected harmonic from the current input ILx or I0x.

4.2.2 Voltage measurement and scaling

The voltage measurement module (VT module, or VTM) is used for measuring the voltages from voltage transformers. The voltage measurements are updated every 5 milliseconds. The measured values are processed into the measurement database and they are used by measurement and protection functions. It is essential to understand the concept of voltage measurements to be able to get correct measurements.

Figure. 4.2.2 - 9. Voltage measurement terminology

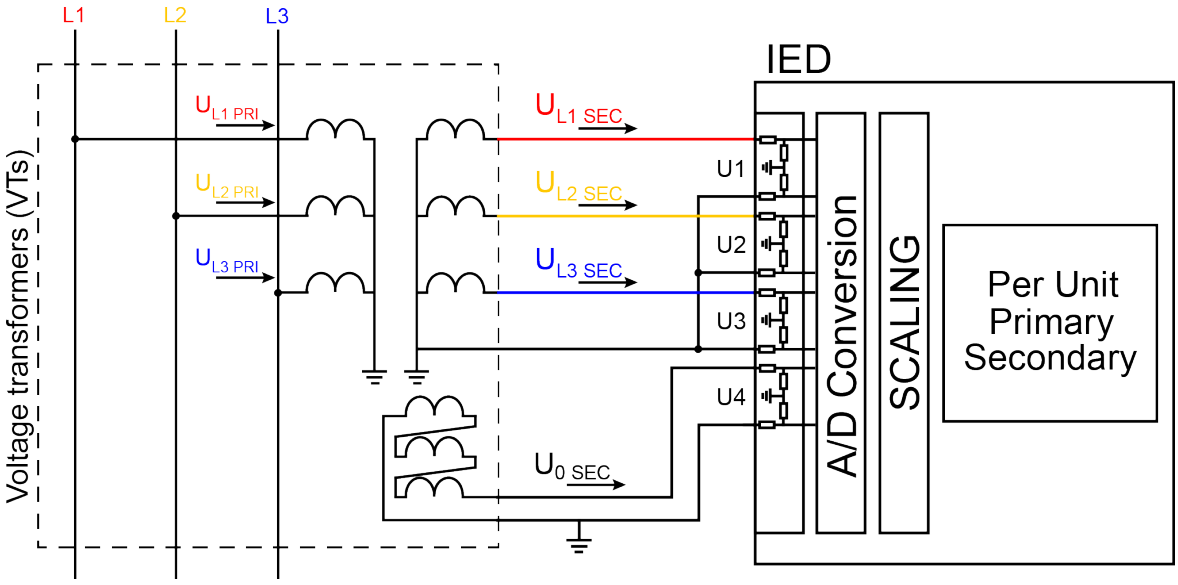

PRI: The primary voltage, i.e. the voltage in the primary circuit which is connected to the primary side of the voltage transformer.

SEC: The secondary voltage, i.e. the voltage which the voltage transformer transforms according to the ratio. This voltage is measured by the device.

For the measurements to be correct the user needs to ensure that the measurement signals are connected to the correct inputs, that the voltage direction correct, and that the scaling is set correctly.

The device calculates the scaling factors based on the set VT primary, and secondary voltage values. The device measures secondary voltages, which are the voltage outputs from the VT installed into the application's primary circuit. The voltage can be measured directly from the system as well (up to 400 V nominal line to neutral voltage). When connecting voltage directly, measuring mode must be set to 3LN+U4 mode. The rated primary and secondary voltages of the VT need to be set for the device to "know" the primary and per-unit values. In modern protection devices this scaling calculation is done internally after the voltage transformer's primary and secondary voltages are set.

Normally, the primary line-to-line voltage rating for VTs is 400 V...60 kV, while the secondary voltage ratings are 100 V...210 V. Non-standard ratings can also be directly connected as the scaling settings are flexible and have large ranges.

Example of VT scaling

The following figure presents how VTs are connected to the device's measurement inputs. It also shows the VT ratings. In the figure below, three line-to-neutral voltages are connected along with the zero sequence voltage; therefore, the 3LN+U4 mode must be selected and the U4 channel must be set as U0. Other possible connections are presented later in this chapter.

© Arcteq Relays Ltd
IM00021

Figure. 4.2.2 - 10. Connections.

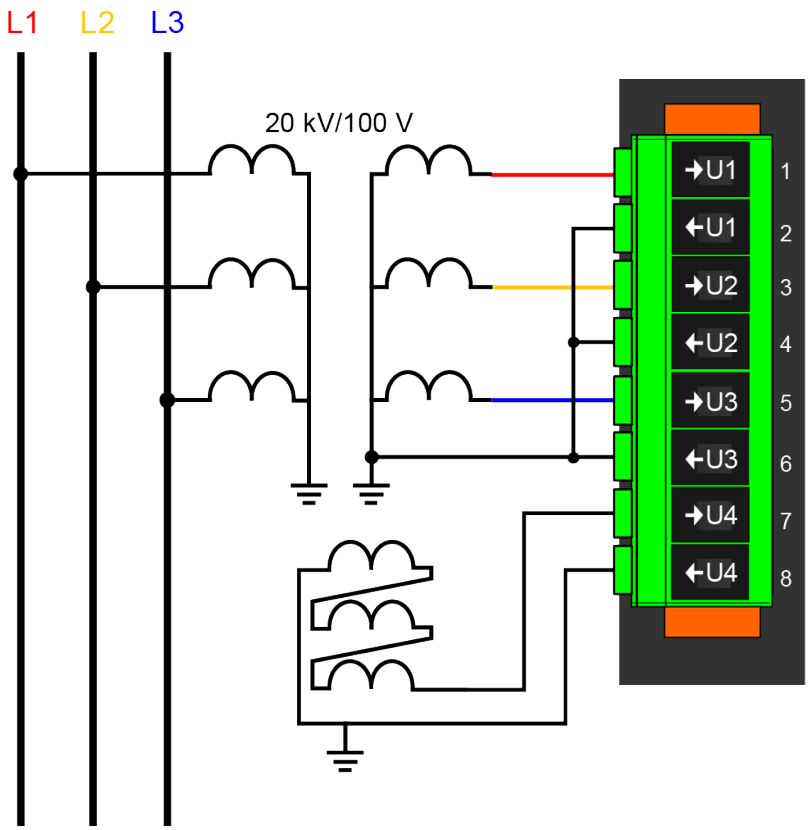

The following table presents the initial data of the connection.

Table. 4.2.2 - 24. Initial data.

Phase voltage VT - VT primary: 20 000 V - VT secondary: 100 V	Zero sequence voltage VT - U4 VT primary: 20 000 V - U4 VT secondary: 100 V
- the zero sequence voltage is connected similarly to line-to-neutral voltages (+U0). - in case wiring is incorrect, all polarities can be individually switched by 180 degrees in the device.	

Once the settings have been sent to the device, device calculates the scaling factors and displays them for the user. The "VT scaling factor P/S" describes the ratio between the primary voltage and the secondary voltage. The per-unit scaling factors ("VT scaling factor p.u.") for both primary and secondary values are also displayed.

There are several different ways to use all four voltage channels. The voltage measurement modes are the following:

- 3LN+U4 (three line-to-neutral voltages and U4 can be used for either zero sequence voltage or synchrochecking)
- 3LL+U4 (three line-to-line voltages and U4 can be used either for zero sequence voltage or synchrochecking)
- 2LL+U3+U4 (two line-to-line voltages and the U3 and the U4 channels can be used for synchrochecking, zero sequence voltage, or for both)

The 3LN+U0 is the most common voltage measurement mode. See below for example connections of voltage line-to-line measurement (3LL on the left, 2LL on the right).

Figure. 4.2.2 - 11. Example connections for voltage line-to-line measurement.

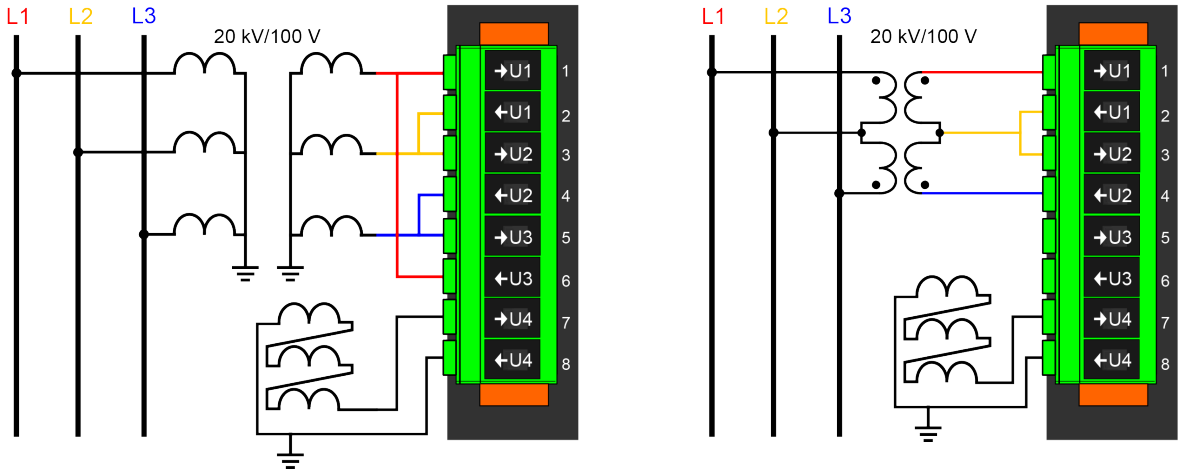

If only two line-to-line voltages are measured, the third one (U_{L31}) is calculated based on the U_{L12} and U_{L23} vectors. When measuring line-to-line voltages, the line-to-neutral voltages can also be calculated as long as the value of U0 is measured.

The voltage measurement channel U4 can be used to measure the zero sequence voltage (U0), the side 2 voltage of the circuit breaker (Synchrocheck), or for automatic voltage regulator function. If the 2LL+U3+U4 mode is selected, the third channel (U3) can be used for this purpose. Please note that U0 can only be measured by using a single channel.

In the image below is an example of 2LL+U0+SS, that is, two line-to-line measurements with the zero sequence voltage and voltage from side 2 for Synchrocheck. Since U0 is available, line-to-neutral voltages can be calculated.

© Arcteq Relays Ltd
IM00021

Figure. 4.2.2 - 12. 2LL+U0+SS settings and connections.

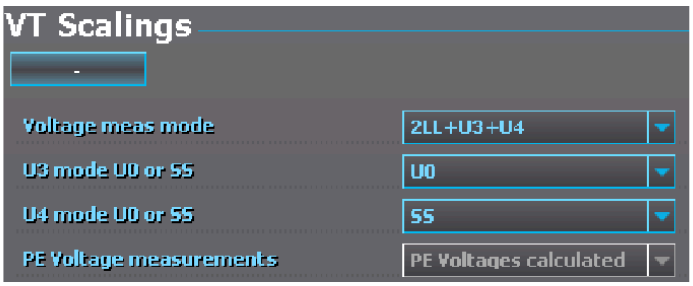

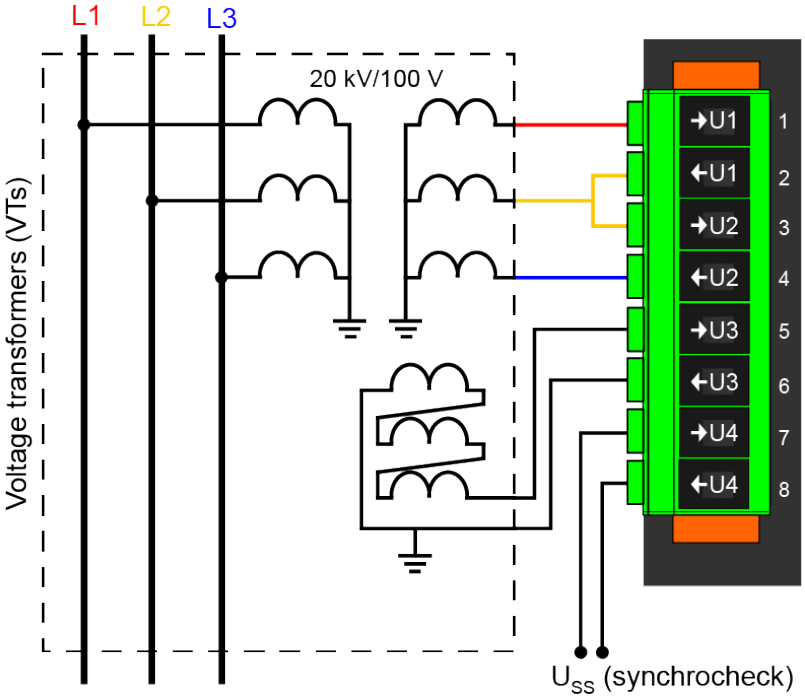

The image collection below presents the device's behavior when nominal voltage is injected into the device via secondary test equipment. The measurement mode is 3LN+U4 which means that the device is measuring line-to-neutral voltages. The VT scaling has been set to 20 000 : 100 V. The U4 channel measures the zero sequence voltage which has the same ratio (20 000 : 100 V).

Figure. 4.2.2 - 13. Measurement behavior when nominal voltage injected.

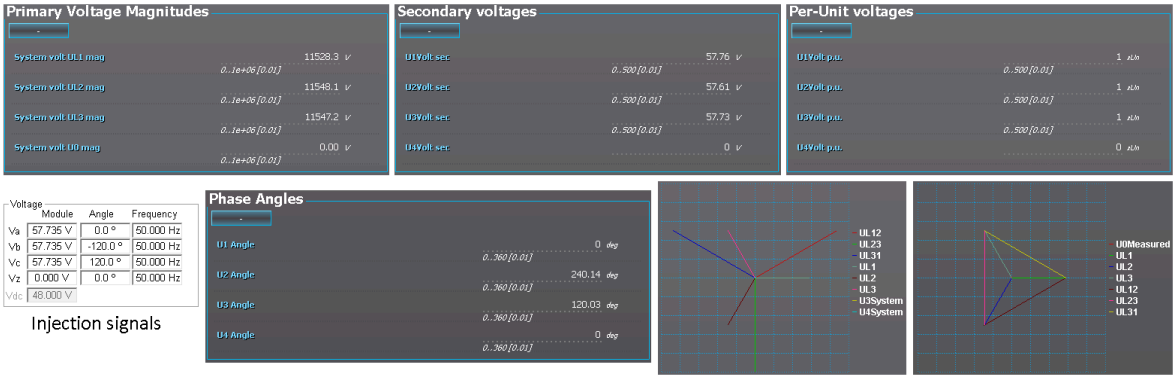

The image collection below presents the device's behavior when voltage is injected into the device via secondary test equipment during an earth fault. The measurement mode is 3LN+U4 which means that the device is measuring line-to-neutral voltages. The VT scaling has been set to 20 000 : 100 V. The U4 channel measures the zero sequence voltage which has the same ratio (20 000 : 100 V).

Figure. 4.2.2 - 14. Device behavior when voltage injected during an earth fault.

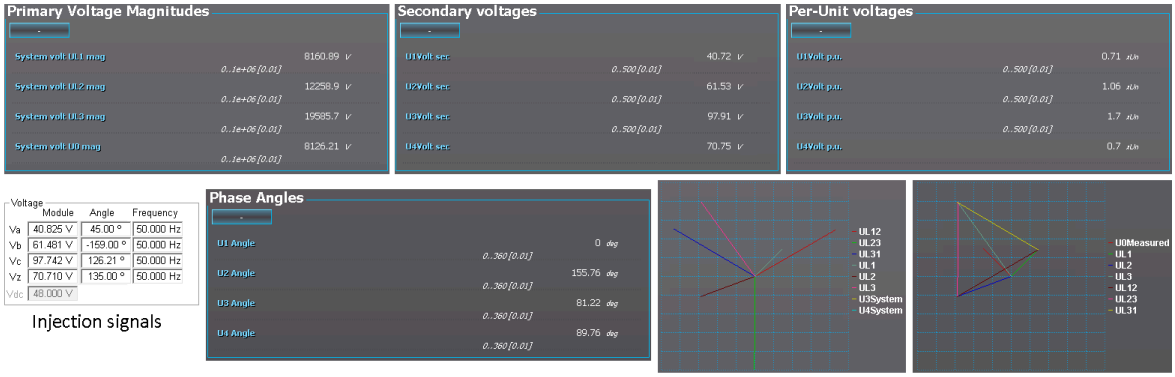

Troubleshooting

When the measured voltage values differ from the expected voltage values, the following table offers possible solutions for the problems.

Problem	Check / Resolution
The measured voltage amplitude in all phases does not match the injected voltage.	The scaling settings or the voltage measurement mode may be wrong, check that the settings match with the connected voltage transformer (*Measurement → Transformers → VT Module*).
The measured voltage amplitude does not match one of the measured phases./ The calculated U0 is measured even though it should not.	Check the wiring connections between the injection device or the VTs and the device.
The measured voltage amplitudes are OK but the angles are strange./ The voltage unbalance protection trips immediately after activation./ The earth fault protection trips immediately after it is activated and voltage calculated.	The voltages are connected to the measurement module but the order or polarity of one or all phases is incorrect. In device settings, go to *Measurement → Phasors* and check the "System voltage vectors" diagram. When all connections are correct, the diagram (symmetric feeding) should look like this: 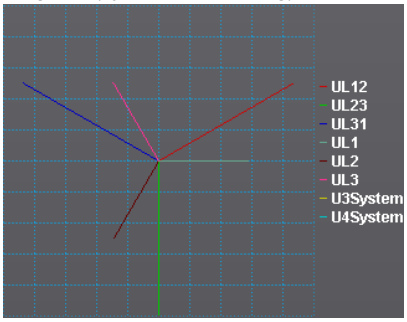

© Arcteq Relays Ltd
IM00021

Alternative

Settings

Table. 4.2.2 - 25. Settings of the VT scaling.

Name	Range	Step	Default	Description
Voltage measurement mode	• 3LN+U4 • 3LL+U4 • 2LL+U3+U4	-	3LN+U4	The device's voltage wiring method. The voltages are scaled according the set voltage measurement mode.
U3 mode U0 or SS	• Not Used • U0 • SS	-	Not Used	The voltage channel U3 can be used to measure zero sequence voltage (U0) or the Synchrocheck voltage (SS). If neither is needed, the (default) option "Not Used" should be active. This setting is only valid if the "2LL+U3+U4" mode is selected.
U4 mode U0 or SS				The voltage channel U4 can be used to measure zero sequence voltage (U0) or the Synchrocheck voltage (SS). If neither is needed, the (default) option "Not Used" should be active.
U0 (U3) Measured from	• Broken Delta • Neutral point • Open delta	-	Broken delta	Defines how the secondary voltage is scaled to the primary. "Broken Delta" is the most common mode. Does not affect how protection operates, it only affects the displayed primary voltages. This parameter is visible when the "U4 mode U0 or SS" has been set to the "U0" mode. Example with scaling 20000/100 for Uo and injection 10V secondary: • Broken delta: 1155V (10%) • Neutral point: 2000 V (17.34%) • Open delta: 667V (5.78%)
U0 (U4) Measured from				Defines how the secondary voltage is scaled to the primary. "Broken Delta" is the most common mode. Does not affect how protection operates, it only affects the displayed primary voltages. This parameter is visible when the "U4 mode U0 or SS" has been set to the "U0" mode. Example with scaling 20000/100 for Uo and injection 10V secondary: • Broken delta: 1155V (10%) • Neutral point: 2000 V (17.34%) • Open delta: 667V (5.78%)
Set input voltage thresholds	• No • Yes	-	Yes	If this parameter is enabled, it is possible to set minimum voltage required for voltage measurement to start.
U1 input threshold	0.10...50.00 V_{sec}	0.01 V_{sec}	1.00 V_{sec}	Sets the lowest voltage the channel is allowed to measure.
U2 input threshold				
U3 input threshold				
U4 input threshold				

Name	Range	Step	Default	Description
Voltage memory	• Disabled • Activated	-	Disabled	Activates the voltage memory. The "Voltage memory" chapter describes the function in more detail.
P-E Voltage measurements	• No P-E voltages available • P-E Voltages calculated • P-E Voltages measured	-	-	Indicates whether or not phase-to-earth voltages are available. Also indicates whether P-E voltages are measured from the voltage channels directly or if they are calculated from measured line-to-line and zero sequence voltages.
VT primary	1.0…1 000 000.0V	0.1V	20 000.0V	The rated primary voltage of the voltage transformer.
VT secondary	0.2…400.0V	0.1V	100.0V	The rated secondary voltage of the voltage transformer.
U3 Res/SS VT primary	1.0…1 000 000V	0.1V	20 000.0V	The primary nominal voltage of the connected U0 or SS VT. This setting is only valid if the "2LL+U3+U4" mode is selected.
U3 Res/SS VT secondary	0.2…400.0V	0.1V	100.0V	The secondary nominal voltage of the connected U0 or SS VT. This setting is only valid if the "2LL+U3+U4" mode is selected.
U4 Res/SS VT primary	1.0…1 000 000.0V	0.1V	20 000.0V	The primary nominal voltage of the connected U0 or SS VT.
U4 Res/SS VT secondary	0.2…400.0V	0.1V	100.0V	The secondary nominal voltage of the connected U0 or SS VT.
U1 Polarity	• - • Invert	-	-	The selection of the first voltage measurement channel's (U1) polarity (direction). The default setting is for the positive voltage to flow from connector 1 to connector 2, with the secondary voltage's starpoint pointing towards the line.
U2 Polarity				The selection of the second voltage measurement channel's (U2) polarity (direction). The default setting is for the positive voltage to flow from connector 3 to connector 4, with the secondary voltage's starpoint pointing towards the line.
U3 Polarity				The selection of the third voltage measurement channel's (U3) polarity (direction). The default setting is for the positive voltage to flow from connector 5 to connector 6, with the secondary voltage's starpoint pointing towards the line.
U4 Polarity				The selection of the fourth voltage measurement channel's (U4) polarity (direction). The default setting is for the positive voltage to flow from connector 7 to connector 8, with the secondary voltage's starpoint pointing towards the line.

© Arcteq Relays Ltd
IM00021

Table. 4.2.2 - 26. Read-only parameters of the VT scaling.

Name	Description
VT scaling factor P/S	The calculated scaling factor that is the ratio between the primary voltage and the secondary voltage.
VT scaling factor p.u. Pri	The scaling factor for the primary voltage's per-unit value.
VT scaling factor p.u. Sec	The scaling factor for the secondary voltage's per-unit value.
U3 VT scaling factor P/S U0/SS	The scaling factor that is the ratio between the U3 channel's primary and secondary voltages. This setting is only valid if the "2LL+U3+U4" mode is selected.
U3 scaling factor p.u. Pri	Scaling factor for the primary voltage's per-unit value. This setting is only valid if the "2LL+U3+U4" mode is selected.
U3 scaling factor p.u. Sec	Scaling factor for the secondary voltage's per-unit value. This setting is only valid if the "2LL+U3+U4" mode is selected.
U4 VT scaling factor P/S U0/SS	Scaling factor that is the ration between the U4 channel's primary and secondary voltages. This setting is only valid is the "2LL+U3+U4" mode is selected.
U4 scaling factor p.u. Pri	Scaling factor for the primary voltage's per-unit value. This setting is only valid if the "2LL+U3+U4" mode is selected.
U4 scaling factor p.u. Sec	Scaling factor for the secondary voltage's per-unit value. This setting is only valid if the "2LL+U3+U4" mode is selected.

Measurements

The following measurements are available in the measured voltage channels.

Table. 4.2.2 - 27. Per-unit voltage measurements.

Name	Range	Step	Description
UxVolt p.u.	0.00…500.00xU_N	0.01xU_N	The voltage measurement fundamental frequency component (in p.u.) from each of the voltage channels.
UxVolt TRMS p.u.	0.00…500.00xU_N	0.01xU_N	The TRMS voltage (inc. harmonics up to 31st) measurement (in p.u.) from each of the voltage channels.

Table. 4.2.2 - 28. Secondary voltage measurements.

Name	Range	Step	Description
Ux Volt sec	0.00…500.00V	0.01V	The secondary voltage measurement fundamental frequency component from each of the voltage channels.
UxVolt TRMS sec	0.00…500.00V	0.01V	The secondary TRMS voltage (inc. harmonics up to 31st) measurement from each of the voltage channels.

Table. 4.2.2 - 29. Voltage phase angle measurements.

Name	Range	Step	Description
Ux Angle	0.00…360.00°	0.01°	The phase angle measurement from each of the four voltage inputs.

Table. 4.2.2 - 30. Per-unit sequence voltage measurements.

Name	Range	Step	Description
Pos.seq.Volt.p.u.	0.00…500.00×U_N	0.01xU_N	The measurement (in p.u.) from the calculated positive sequence voltage.
Neg.seq.Volt.p.u.	0.00…500.00xU_N	0.01xU_N	The measurement (in p.u.) from the calculated negative sequence voltage.
Zero.seq.Volt.p.u.	0.00…500.00xU_N	0.01xU_N	The measurement (in p.u.) from the calculated zero sequence voltage.

Table. 4.2.2 - 31. Primary sequence voltage measurements.

Name	Range	Step	Description
Pos.seq.Volt.pri	0.00…1 000 000.00V	0.01V	The primary measurement from the calculated positive sequence voltage.
Neg.seq.Volt.pri	0.00…1 000 000.00V	0.01V	The primary measurement from the calculated negative sequence voltage.
Zero.seq.Volt.pri	0.00…1 000 000.00V	0.01V	The primary measurement from the calculated zero sequence voltage.

Table. 4.2.2 - 32. Secondary sequence voltage measurements.

Name	Range	Step	Description
Pos.seq.Volt.sec	0.00…4 800.00V	0.01V	The secondary measurement from the calculated positive sequence voltage.
Neg.seq.Volt.sec	0.00…4 800.00V	0.01V	The secondary measurement from the calculated negative sequence voltage.
Zero.seq.Volt.sec	0.00…4 800.00V	0.01V	The secondary measurement from the calculated zero sequence voltage.

Table. 4.2.2 - 33. Sequence voltage angle measurements.

Name	Range	Step	Description
Pos.seq.Volt.Angle	0.00…360.00°	0.01°	The calculated positive sequence voltage angle.
Neg.seq.Volt.Angle	0.00…360.00°	0.01°	The calculated negative sequence voltage angle.
Zero.seq.Volt.Angle	0.00…360.00°	0.01°	The calculated zero sequence voltage angle.

© Arcteq Relays Ltd
IM00021

Table. 4.2.2 - 34. System primary voltage measurements.

Name	Range	Step	Description
System volt UL12 mag	0.00…1 000 000.00V	0.01V	The primary line-to-line UL12 voltage fundamental frequency component (measured or calculated). You can also select the row where the unit for this is kV.
System volt UL23 mag	0.00…1 000 000.00V	0.01V	The primary line-to-line UL23 voltage fundamental frequency component (measured or calculated). You can also select the row where the unit for this is kV.
System volt UL31 mag	0.00…1 000 000.00V	0.01V	The primary line-to-line UL31 voltage fundamental frequency component (measured or calculated). You can also select the row where the unit for this is kV.
System volt UL1 mag	0.00…1 000 000.00V	0.01V	The primary line-to-neutral UL1 voltage fundamental frequency component (measured or calculated). You can also select the row where the unit for this is kV.
System volt UL2 mag	0.00…1 000 000.00V	0.01V	The primary line-to-neutral UL2 voltage fundamental frequency component (measured or calculated). You can also select the row where the unit for this is kV.
System volt UL3 mag	0.00…1 000 000.00V	0.01V	The primary line-to-neutral UL3 voltage fundamental frequency component (measured or calculated). You can also select the row where the unit for this is kV.
System volt U0 mag	0.00…1 000 000.00V	0.01V	The primary zero sequence U0 voltage fundamental frequency component (measured or calculated). You can also select the row where the unit for this is kV. There is also a row where the unit is %.
System volt U3 mag	0.00…1 000 000.00V	0.01V	The primary measured Synchrocheck voltage fundamental frequency component (SS). This magnitude is displayed only when the "2LL+U3+U4" mode is selected and both U3 and U4 are in use. You can also select the row where the unit for this is kV.
System volt U4 mag	0.00…1 000 000.00V	0.01V	The primary measured Synchrocheck voltage fundamental frequency component (SS). This magnitude is displayed only when the "2LL+U3+U4" mode is selected and both U3 and U4 are in use. You can also select the row where the unit for this is kV.

Table. 4.2.2 - 35. Primary system voltage angles.

Name	Range	Step	Description
System volt UL12 ang	0.00…360.00°	0.01°	The primary line-to-line angle UL12 (measured or calculated).
System volt UL23 ang	0.00…360.00°	0.01°	The primary line-to-line angle UL23 (measured or calculated).

Name	Range	Step	Description
System volt UL31 ang	0.00…360.00°	0.01°	The primary line-to-line angle UL23 (measured or calculated).
System volt UL1 ang	0.00…360.00°	0.01°	The primary line-to-neutral angle UL1 (measured or calculated).
System volt UL2 ang	0.00…360.00°	0.01°	The primary line-to-neutral angle UL2 (measured or calculated).
System volt UL3 ang	0.00…360.00°	0.01°	The primary line-to-neutral angle UL3 (measured or calculated).
System volt U0 ang	0.00…360.00°	0.01°	The primary zero sequence angle U0 (measured or calculated).
System volt U3 ang	0.00…360.00°	0.01°	The primary measured Synchrocheck angle SS. This magnitude is only valid when the "2LL+U3+U4" mode is selected and both U3 and U4 are in use.
System volt U4 ang	0.00…360.00°	0.01°	The primary measured Synchrocheck angle SS. This magnitude is displayed only when the "2LL+U3+U4" mode is selected and both U3 and U4 are in use.

Table. 4.2.2 - 36. Harmonic voltage measurements.

Name	Range	Step	Description
Harm Abs.or Perc.	• Percent • Absolute	-	Defines whether the harmonics are calculated as percentages or absolute values.
Harmonics display	• Per unit • Primary V • Secondary V	-	Defines how the harmonics are displayed: in p.u. values, as primary voltage values, or as secondary voltage values.
UxMaxH	0.00…100 000.00V	0.01V	Displays the maximum harmonics value of the selected voltage input Ux.
Ux Fund	0.00…100 000.00V	0.01V	Displays the voltage value of the fundamental frequency component of the selected voltage input Ux.
Ux harmonics (2nd…31st harmonic)	0.00…100 000.00V	0.01V	Displays the selected harmonic from the voltage input Ux.
Ux Amplitude THD	0.000…100.000V	0.001V	Amplitude ratio THD voltage. Recognized by IEC.
Ux Power THD	0.000…100.000V	0.001V	Power ratio THD voltage. Recognized by the IEEE.

© Arcteq Relays Ltd
IM00021

Voltage memory

Some protection functions (such as directional overcurrent) use the device's measured current and voltage to determine whether the electrical network fault appears to be inside the protected area. The determination is made by comparing the angle between the operating quantity (zone/tripping area) and the actual measured quantity. The function then produces an output when the required terms are met.

In close-in faults the system voltage on the secondary side may fall down to a few volts or close to nothing. In such cases, when the measured voltage is absent, the fault direction cannot be solved. As a backup, non-directional protection can be used for tripping, but in such cases the selectivity of the network will be reduced. However, an angle memory for voltage can be used to prevent this from happening. An adjustable voltage level with pre-fault voltage angles can be used as a reference for fault direction and/or distance. The reference can be set manually for duration. Configurable voltage memory enables even time-delayed backup tripping to be initiated.

The user can activate voltage memory (and find all related settings) by following this path in device settings: *Measurement → Transformers → VT Module (3U/4U) 1 → Voltage memory* ("Activated"/"Disabled").

The activation of voltage memory depends of following criteria:

1. Normal voltage levels have been present for longer than 2.5 seconds before voltages have dropped.
2. All used line-to-line or line-to-neutral voltages need to be below the set value for the "VMEM activation voltage" parameter.
3. At least one phase current must be above the set value for the "Measured current condition 3I>" parameter. This setting limit is optional.

Figure. 4.2.2 - 15. Directional overcurrent characteristics.

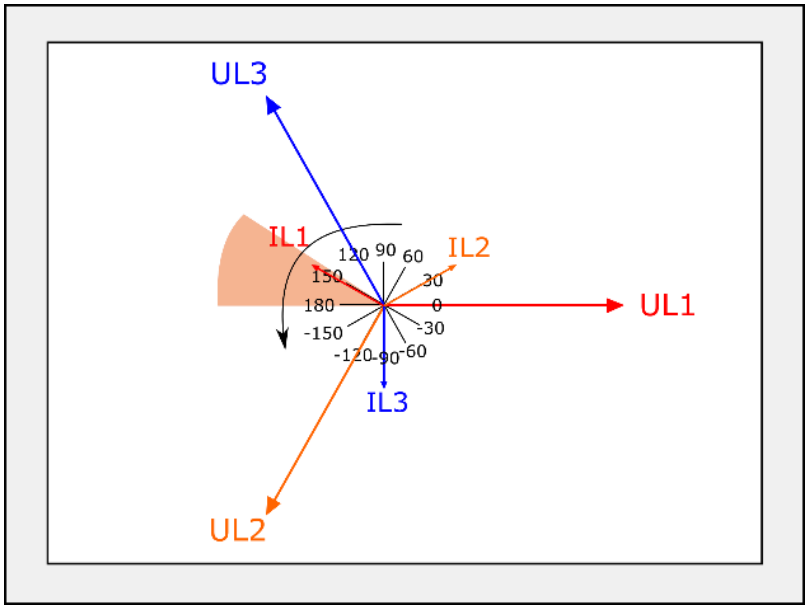

Voltage memory activates when the above-mentioned criteria are met. Voltage memory uses the "VMEM activation voltage" parameter as voltage amplitude even when the actual measured voltage has decreased below it or close to zero. The angle used by this function is the one captured the moment before the fault occurred and voltage memory was activated. When voltage memory is activated, the output "Voltage memory on" signal is activated. This signal can be found in the device's I/O matrix.

While voltage memory is active, voltages are absent and therefore angle measurement is not possible. Healthy state angles (before a fault) are used during a fault. This is why a drift between the assumed voltage angle and the actual measured phase current angle takes place. While voltage memory is used, the angle of phase currents drifts approximately one degree for each passing second (see the graph below).

Figure. 4.2.2 - 16. Voltage angle drift.

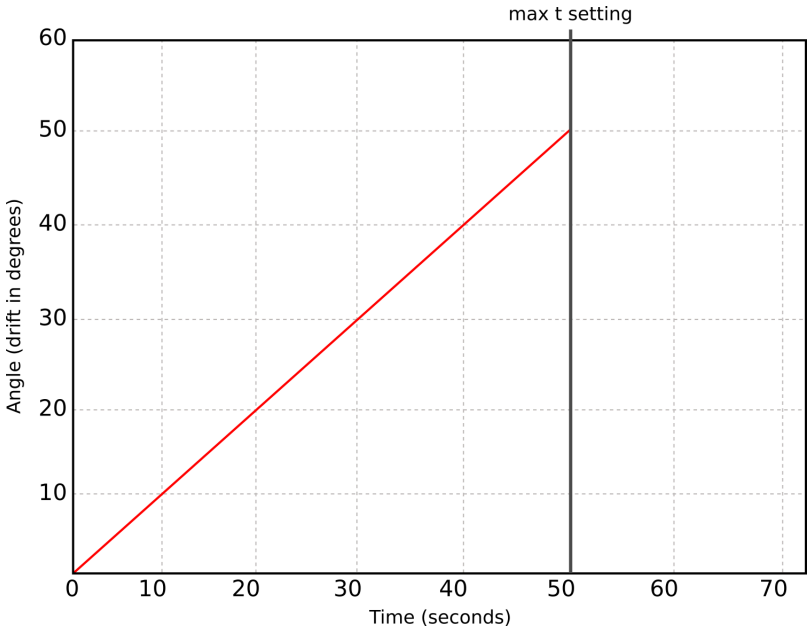

The blocking signal for voltage memory can be found among other stage-related settings in the tab *VT Module (3U/4U) 1*. The blocking signal is checked in the beginning of each program cycle.

VMEM activation voltage and Measured current condition 3I>

When the voltage memory function is enabled, it activates when all line voltages drop below the "VMEM activation voltage" threshold limit. When "Measured current condition 3I>" is used, activation cannot be based on just the voltage. Therefore, at least one of the three-phase currents must also rise above the set current pick-up setting.

VMEM max active time

Voltage memory can be active for a specific period of time, set in "VMAX active time". It can be anything between 0.02...50.00 seconds. The function supports the definite time (DT) delay type. It depends on the application for how long the memory should be used. During massive bolted faults, the fault should be cleared and the breaker opened as soon as possible; therefore, a short operating time for voltage memory is usually applied. A typical delay for voltage memory is between 0.5...1.0 s. When the operating time passes and voltage memory is no longer used, the protection function operation is blocked and possible START or TRIP signals are reset. The memory uses longer operating times when a backup protection is applied.

Forced CT f tracking on VMEM

While fixed frequency tracking is used, all protection stage-based sampling (apart from frequency protection) is based on a set fixed frequency such as 50 Hz or 60 Hz. When the frequency drops massively during a fault while angle memory is in use, it is also possible that the frequency of the system starts to fluctuate. In such cases, if current sampling of used protection stages is based on 50/60 Hz, there could be an error in current magnitude and in angle measurement. To minimize these errors, it is recommended that the frequency is measured and protection-based sampling from the current is performed while voltages are gone.

© Arcteq Relays Ltd
IM00021

When the "Forced CT f tracking" parameter is activated and voltages are gone, the frequency from the selected current-based reference channel 3 (the current from IL3) is used for current sampling. This eliminates any possible measurement errors in the fixed frequency mode.

For example, let us say a 500 A current is measured on the primary side while the fixed frequency is set to 50 Hz. This results in the frequency dropping to 46 Hz, while the actual current measurement would be 460 A. Therefore, the system would have an error of 40 A.

Table. 4.2.2 - 37. Voltage memory parameters.

Name	Range	Step	Default	Description
Voltage memory	• Disabled • Activated	-	Enabled	Enables or activates voltage memory function.
VMEM activation voltage	0.10…50.00 %Un	0.01 %Un	15.00 %Un	Voltage threshold for activating voltage memory. When all voltage measurements are under this setting value, voltage memory is activated.
VMEM max active time	0.020…50.000 s	0.005 s	15.000 s	Maximum duration for voltage memory. After the time set in this parameter has passed, voltage memory is reset.
Enable forced CT f tracting on VMEM	• Disabled • Activated	-	Disabled	When in use, frequency tracking is forced to "reference 3" when no voltage can be measured. If this parameter is used, frequency reference 3 should be set to "IL3".
Forced CT tracking status	• Disabled • Activated	-	-	Displays the current status of the "forced CT tracking".
Measured current condition 3I>	• Disabled • Activated	-	Disabled	Enables or activates current condition monitoring. When in use, at least one of the phase currents must rise above a set value for the voltage memory to activate.
Minimum current for VMEM	0.01…50.00 xIn	0.01 xIn	1.00 xIn	Minimum required current for current condition.
Current condition status	• Disabled • Activated	-	-	Displays the current monitoring status.

Table. 4.2.2 - 38. Voltage memory event messages.

Event block name	Event names
M1VT1	Voltage memory enabled/disabled
M1VT1	Voltage low detected ON/OFF
M1VT1	Current high detected ON/OFF
M1VT1	Frequency tracked from CT ON/OFF
M1VT1	Using Voltage memory ON/OFF
M1VT1	Voltage memory blocked ON/OFF

4.2.3 Power and energy calculation

Power is divided into three magnitudes: apparent power (S), active power (P) and reactive power (Q). Energy measurement calculates magnitudes for active and reactive energy. Energy can flow to the forward direction (exported) or to the reverse direction (imported).

If a unit has more than one CT measurement module, the user can choose which module's current measurement is used by the power calculation. The power and energy measurements are updated every 5 milliseconds.

Line-to-neutral voltages available

Power is calculated from line-to-neutral voltages and phase currents. If line-to-line voltages are connected, the device can calculate line-to-neutral voltages based on the measured zero sequence voltage. The following equations apply for power calculations with the line-to-neutral mode and the line-to-line voltage mode (with U0 connected and measured):

Figure. 4.2.3 - 17. Three-phase power (S) calculation.

$$S_{L1} = U_{L1} \times I_{L1}$$
$$S_{L2} = U_{L2} \times I_{L2}$$
$$S_{L3} = U_{L3} \times I_{L3}$$
$$S = S_{L1} + S_{L2} + S_{L3}$$

Figure. 4.2.3 - 18. Three-phase active power (P) calculation.

$$P_{L1} = U_{L1} \times I_{L1} \cos\varphi$$
$$P_{L2} = U_{L2} \times I_{L2} \cos\varphi$$
$$P_{L3} = U_{L3} \times I_{L3} \cos\varphi$$
$$P = P_{L1} + P_{L2} + P_{L3}$$

In these equations, phi (φ) is the angle difference between voltage and current.

Figure. 4.2.3 - 19. Three-phase reactive power (Q) calculation.

$$Q_{L1} = U_{L1} \times I_{L1} \sin\varphi$$
$$Q_{L2} = U_{L2} \times I_{L2} \sin\varphi$$
$$Q_{L3} = U_{L3} \times I_{L3} \sin\varphi$$
$$Q = Q_{L1} + Q_{L2} + Q_{L3}$$

Active power can be to the forward or the reverse direction. The direction of active power can be indicated with the power factor (Cos (φ), or Cosine phi), which is calculated according the following formula:

© Arcteq Relays Ltd
IM00021

$$3PH\ Cos(phi) = {}^{P}/_{S}$$

$$L1\ Cos(phi) = {}^{P_{L1}}/_{S_{L1}}$$

$$L2\ Cos(phi) = {}^{P_{L2}}/_{S_{L2}}$$

$$L3\ Cos(phi) = {}^{P_{L3}}/_{S_{L3}}$$

The direction of reactive power is divided into four quadrants. Reactive power may be inductive or capacitive on both forward and reverse directions. Reactive power quadrant can be indicated with Tan (φ) (tangent phi), which is calculated according the following formula:

$$3PH\ Tan(phi) = {}^{Q}/_{P}$$

$$L1\ Tan(phi) = {}^{Q_{L1}}/_{P_{L1}}$$

$$L2\ Tan(phi) = {}^{Q_{L2}}/_{P_{L2}}$$

$$L3\ Tan(phi) = {}^{Q_{L3}}/_{P_{L3}}$$

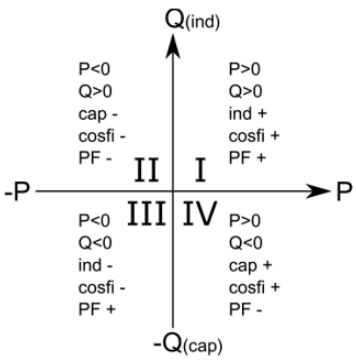

Power factor calculation is done similarly to the Cosine phi calculation but the polarity is defined by the reactive power direction. Therefore, the power factor is calculated with the following formula:

$$3PH\ PF = {}^{P}/_{S} * {}^{Q}/_{|Q|}$$

$$L1\ PF = {}^{P_{L1}}/_{S_{L1}} * {}^{Q_{L1}}/_{|Q_{L1}|}$$

$$L2\ PF = {}^{P_{L2}}/_{S_{L2}} * {}^{Q_{L2}}/_{|Q_{L2}|}$$

$$L3\ PF = {}^{P_{L3}}/_{S_{L3}} * {}^{Q_{L3}}/_{|Q_{L3}|}$$

Only line-to-line voltages available

If the line-to-line voltages are measured but the zero sequence voltage is not measured or is not otherwise known, the three-phase power calculation is based on Aron's theorem:

$$S = U_{23} \times I_{L1} \cos(30) + U_{31} \times I_{L2} \cos(30)$$

$$P = U_{23} \times I_{L1} \cos(30 - \varphi) + U_{31} \times I_{L2} \cos(30 + \varphi)$$

$$Q = U_{23} \times I_{L1} + \sin(30 - \varphi) + U_{31} \times I_{L2} \sin(30 + \varphi)$$

Both cos(φ) and tan(φ) are calculated in the same way as in the line-to-neutral mode.

Troubleshooting

Check the "Troubleshooting" section in chapters "Current measurement and scaling" and "Voltage measurement and scaling" for more information. Most power and energy measurement problems are usually related to the same issues (i.e. wiring errors, wrong measurement modes, faulty frequency settings, etc.).

Settings

Table. 4.2.3 - 39. Power and energy measurement settings

Name	Range	Step	Default	Description
Power measurement currents from	• CT1 • CT2	-	CT1	Defines which current transformer module is used in power and energy calculation.
3ph active energy measurement	• Disabled • Enabled	-	Disabled	Enables/disables the active energy measurement.
3ph reactive energy measurement	• Disabled • Enabled	-	Disabled	Enables/disables the reactive and apparent energy measurement.
3ph energy megas or kilos	• Mega • Kilo	-	Mega	Defines whether energy is measured with the prefix 'kilo' (10^3) or 'mega' (10^6).
Edit energy values	• Disabled • Enabled	-	Disabled	When this parameter is enabled it is possible to manually edit exported and imported active energy values. NOTICE! "E 3ph M or k" parameter has to be set to "kilo" for this feature to function.
Invert imp/ exp energy directions	• Not inverted • Inverted	-	Not inverted	Inverts the direction of imported and exported energy without affecting the direction of power calculation.
Nominal power kVA	0.10...500000.00kVA	0.01kVA	100kVA	Defines the nominal power of the protected object.
PQ Quadrant	• Undefined • Q1 Fwd Ind • Q2 Rev Cap • Q3 Rev Ind • Q4 Fwd Cap	-	Undefined	Indicates what the power PQ quadrant is at that moment.
VA Quadrant	• Undefined • Q1 Fwd Cap AV • Q2 Rev Ind AV • Q3 Rev Cap VA • Q4 Fwd Ind VA	-	Undefined	Indicates what the power VA quadrant is at that moment.
Reset energy calculators ("Reset 3ph Energies")	• - • Reset	-	-	Resets the memory of the three-phase energy calculators. Goes automatically back to the "- " state after the reset is finished.
Phase active energy measurement	• Disabled • Enabled	-	Disabled	Enables/disables the active energy per phase measurement.

© Arcteq Relays Ltd
IM00021

Name	Range	Step	Default	Description
Phase reactive energy measurement	• Disabled • Enabled	-	Disabled	Enables/disables the reactive energy per phase measurement.
Phase energies megas or kilos	• Mega • Kilo	-	Mega	Defines whether energy (per phase) is measured with the prefix 'kilo' (10^3) or 'mega' (10^6).
Reset energy calculators (per phase) ("Reset E per phase")	• - • Reset	-	-	Resets the memory of the indivisual phase energy calculator. Goes automatically back to the "-" state after the reset is finished.

Table. 4.2.3 - 40. Energy Dose Counter 1 settings

Name	Range	Step	Default	Description
Energy dose counter mode	• Disabled • Activated	-	Disabled	Enables/disables energy dose counters generally.
Energy dose counter LN mode	• On • Blocked • Test • Test/Blocked • Off	-	On	Set mode of DOS block. This parameter is visible only when *Allow setting of individual LN mode* is enabled in *General* menu.
Energy does counter LN behaviour	• On • Blocked • Test • Test/Blocked • Off	-	-	Displays the mode of DOS block. This parameter is visible only when *Allow setting of individual LN mode* is enabled in *General* menu.
Clear pulse counter	• - • Clear	-	-	Resets the "DC 1…4 Pulses sent" counters back to zero.
DC 1…4 enable	• Disabled • Enabled	-	Disabled	Enables/disables the energy dose counter 1…4 individually.
DC 1…4 Input signal select	• 3PH.Fwd.Act.EP • 3PH.Rev.Avt.EP • 3PH.Fwd.React.EQ.CAP • 3PH.Fwd.React.EQ.IND • 3PH.Rev.React.EQ.CAP • 3PH.Rev.React.EQ.IND	-	3PH.Fwd.Act.EP	Selects whether the energy is active or reactive, whether the direction of the energy is forward of reverse, and whether reactive energy is inductive or capacitive.
DC 1…4 Input signal	$-1 \times 10^6 \ldots 1 \times 10^6$	0.01	-	The total amount of energy consumed.
DC 1…4 Pulse magnitude	0…1800kW/var	0.005kW/var	1kW/Var	The set pulse size. An energy pulse is given every time the set magnitude is exceeded.

Name	Range	Step	Default	Description
DC 1…4 Pulse length	0…1800s	0.005s	1s	The total length of a control pulse.
DC1…4 Pulses sent	0…4 294 967 295	1	-	Indicates the total number of pulses sent.

Table. 4.2.3 - 41. DC 1…4 Pulse out settings

Name	Range	Step	Default	Description
DC 1…4 Pulse out	OUT1…OUTx	-	None selected	The selection of the controlled physical outputs.

Power measurements

The following power calculations are available when the voltage and the current cards are available.

Table. 4.2.3 - 42. Three-phase power calculations.

Name	Range	Step	Description
3PH Apparent power (S)	$-1x10^6$…$1x10^6$kVA	0.001kVA	The total three-phase apparent power in kilo-volt-ampere
3PH Active power (P)	$-1x10^6$…$1x10^6$kW	0.001kW	The total three-phase active power in kilowatts
3PH Reactive power (Q)	$-1x10^6$…$1x10^6$kVar	0.001kVar	The total three-phase reactive power in kilovars
3PH Apparent power (S MVA)	$-1x10^5$…$1x10^5$MVA	0.001MVA	The total three-phase apparent power in megawatts
3PH Active power (P MW)	$-1x10^5$…$1x10^5$MW	0.001MW	The total three-phase active power in mewatts
3PH Reactive power (QMVar)	$-1x10^5$…$1x10^5$MVar	0.001MVar	The total three-phase active power in megavars
3PH Tan(phi)	$-1x10^6$…$1x10^6$	0.001	The direction of three-phase active power
3PH Cos(phi)	$-1x10^6$…$1x10^6$	0.001	The direction of three-phase reactive power
3PH Power factor	$-1x10^6$…$1x10^6$	0.0001	The three-phase power factor

Table. 4.2.3 - 43. Single-phase power calculations (L1...L3).

Name	Unit	Range	Step	Description
Lx Apparent power (S)	kVA	$-1x10^6$…$1x10^6$	0.001	The apparent power of Phase Lx in kilo-volt-amperes
Lx Active power (P)	kW	$-1x10^6$…$1x10^6$	0.001	The active power of Phase Lx in kilowatts
Lx Reactive power (Q)	kVar	$-1x10^6$…$1x10^6$	0.001	The reactive power of Phase Lx kilovars

© Arcteq Relays Ltd
IM00021

Name	Unit	Range	Step	Description
Lx Tan(phi)	-	$-1x10^6 \ldots 1x10^6$	0.001	The direction of Phase Lx's active power
Lx Cos(phi)	-	$-1x10^6 \ldots 1x10^6$	0.001	The direction of Phase Lx's reactive power
Lx Power factor	-	$-1x10^6 \ldots 1x10^6$	0.0001	The power factor of Phase Lx

Energy measurements

The following energy calculations are available when the voltage and the current cards are available. Please note that the unit prefix is determined by the user's selection between 'kilo' and 'mega' in "Three-phase energy prefix ("E 3ph M or k")" under the general "Power and energy measurement settings".

Table. 4.2.3 - 44. Three-phase energy calculations.

Name	Range	Step	Description
Exported Active Energy (P) (kWh or MWh)	$-1x10^9 \ldots 1x10^9$	1	The total amount of exported active energy.
Imported Active Energy (P) (kWh or MWh)	$-1x10^9 \ldots 1x10^9$	1	The total amount of imported active energy.
Active Energy (P) Export/Import balance (kWh or MWh)	$-1x10^9 \ldots 1x10^9$	1	The sum of imported and exported active energy.
Exported (Q) while Export (P) (kVarh or MVarh)	$-1x10^9 \ldots 1x10^9$	1	The total amount of exported reactive energy while active power is exported.
Imported (Q) while Export (P). (kVarh or MVarh)	$-1x10^9 \ldots 1x10^9$	1	Total amount of imported reactive energy while active energy is exported.
Reactive energy (Q) balance while export (P) (kVarh or MVarh)	$-1x10^9 \ldots 1x10^9$	1	The sum of imported and exported reactive capacitive energy while active power is exported.
Exported (Q) while Import (P) (kVarh or MVarh)	$-1x10^9 \ldots 1x10^9$	1	The total amount of exported reactive energy while active energy is imported.
Imported (Q) while Import (P) (kVarh or MVarh)	$-1x10^9 \ldots 1x10^9$	1	The total amount of imported reactive energy while active energy is imported.
Reactive energy (Q) balance while Import (P) (kVarh or MVarh)	$-1x10^9 \ldots 1x10^9$	1	The sum of imported and exported reactive energy while active energy is imported.
Apparent Energy (S) while Export (P) (kVAh or MVAh)	$-1x10^9 \ldots 1x10^9$	1	The total amount of exported apparent energy while active energy is exported.
Apparent Energy (S) while Import (P) (kVAh or MVAh)	$-1x10^9 \ldots 1x10^9$	1	The total amount of exported apparent energy while active energy is imported.
Apparent Energy (S) Net	$-1x10^9 \ldots 1x10^9$	1	Total amount of apparent energy.
Real Energy (P) Net	$-1x10^9 \ldots 1x10^9$	1	The sum of active energy supply and demand.
Reactive Energy (Q) Net	$-1x10^9 \ldots 1x10^9$	1	The sum of reactive energy supply and demand.
Real Energy (P) Supply	$-1x10^9 \ldots 1x10^9$	1	Total amount of active energy supplied. Default supply direction towards busbar.

Name	Range	Step	Description
Reactive Energy (Q) Supply	$-1x10^9 \ldots 1x10^9$	1	Total reactive energy supplied. Default supply direction towards busbar.
Real Energy (P) Demand	$-1x10^9 \ldots 1x10^9$	1	Total amount of active energy demand. Default demand direction from busbar.
Reactive Energy (Q) Demand	$-1x10^9 \ldots 1x10^9$	1	Total amount of reactive energy demand. Default demand direction from busbar.

Table. 4.2.3 - 45. Single-phase energy calculations (L1...L3).

Name	Range	Step	Description
Export Active Energy Lx (kWh or MWh)	$-1x10^9 \ldots 1x10^9$	1	The exported active energy of the phase.
Import Active Energy (kWh or MWh)	$-1x10^9 \ldots 1x10^9$	1	The imported active energy of the phase.
Active Energy (P) Export/Import balance (kWh or MWh)	$-1x10^9 \ldots 1x10^9$	1	The sum of the phase's imported and exported active energy.
Exported (Q) while Export (P) Lx (kVarh or MVarh)	$-1x10^9 \ldots 1x10^9$	1	The exported reactive energy of the phase while active energy is exported.
Imported (Q) while Export (P) Lx (kVarh or MVarh)	$-1x10^9 \ldots 1x10^9$	1	The imported reactive energy of the phase while active energy is exported.
Reactive Energy (Q) balance while Export (P) Lx (kVarh or MVarh)	$-1x10^9 \ldots 1x10^9$	1	The sum of the phase's imported and exported reactive energy while active energy is exported.
Exported (Q) while Import (P) Lx (kVarh or MVarh)	$-1x10^9 \ldots 1x10^9$	1	The exported reactive energy of the phase while active energy is imported.
Imported (Q) while Import (P) Lx (kVarh or MVarh)	$-1x10^9 \ldots 1x10^9$	1	The imported reactive energy of the phase while active energy is imported.
Reactive energy (Q) balance while Import (P) Lx (kVarh or MVarh)	$-1x10^9 \ldots 1x10^9$	1	The sum of the phase's imported and exported reactive energy while active energy is imported.
Apparent Energy (S) while Export (P) Lx	$-1x10^9 \ldots 1x10^9$	1	The apparent energy of the phase while active energy is exported.
Apparent Energy (S) while Import (P) Lx	$-1x10^9 \ldots 1x10^9$	1	The apparent energy of the phase while active energy is imported.

Calculation examples

Here is an example of power calculation. Both wiring methods (line-to-line and line-to-neutral) are checked with the same signal injection. The voltage scaling is set to 20 000 : 100 V and the current scaling is set to 1000 : 5 A.

Voltages (line-to-neutral):	Currents:
U_{L1} = 40.825 V, 45.00°	I_{L1} = 2.5 A, 0.00°
U_{L2} = 61.481 V, -159.90°	I_{L2} = 2.5 A, -120.00°

© Arcteq Relays Ltd

Voltages (line-to-neutral):	Currents:
U_{L3} = 97.742 V, 126.21°	I_{L3} = 2.5 A, 120.00°

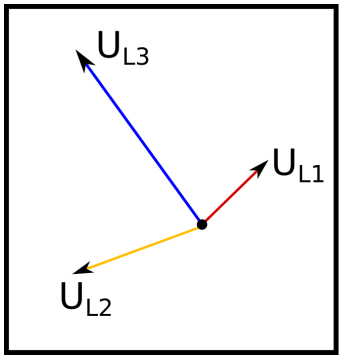

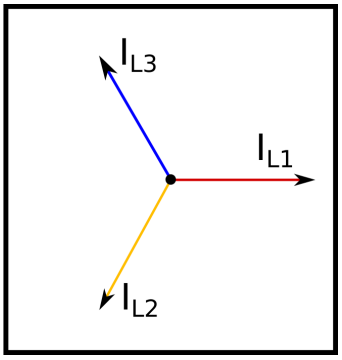

$S_{L1} = U_{L1} \times I_{L1} = 40.825\ \text{V} \times 2.5\ \text{A} = 102\ \text{VA (secondary)}$ 4.08 MVA (primary)

$P_{L1} = U_{L1} \times I_{L1} \cos\varphi = 40.825\ \text{V} \times 2.5\ \text{A} \cos(45° - 0°) = 72.2\ \text{W (secondary)}$ 2.89 MW (primary)

$Q_{L1} = U_{L1} \times I_{L1} \sin\varphi = 40.825\ \text{V} \times 2.5\ \text{A} \sin(45° - 0°) = 72.2\ \text{var (secondary)}$ 2.89 MVar (primary)

$L1\ Tan(phi) = {}^{Q_{L1}}/_{P_{L1}} = {}^{2.89}/_{2.89} = 1.00$ $\qquad$ $L1\ Cos(phi) = {}^{P_{L1}}/_{S_{L1}} = {}^{2.89}/_{4.08} = 0.71$

Name	Value	Name	Value	Name	Value	Name	Value
L1 (S)	4.08 MVA	L2 (S)	6.15 MVA	L3 (S)	9.77 MVA	3PH (S)	20.00 MVA
L1 (P)	2.89 MW	L2 (P)	4.72 MW	L3 (P)	9.71 MW	3PH (P)	17.32 MW
L1 (Q)	2.89 Mvar	L2 (Q)	-3.94 Mvar	L3 (Q)	1.06 Mvar	3PH (Q)	0.01 Mvar
L1 Tan	1.00	L2 Tan	-0.83	L3 Tan	0.11	3PH Tan	0.00
L1 Cos	0.71	L2 Cos	0.77	L3 Cos	0.99	3PH Cos	0.87

Voltages (line-to-line):	Currents:
U_{L12} = 100.00 V, 30.00°	I_{L1} = 2.5 A, 0.00°
U_{L23} = 100.00 V, -90.00°	I_{L2} = 2.5 A, -120.00°
	I_{L3}= 2.5 A, 120.00°

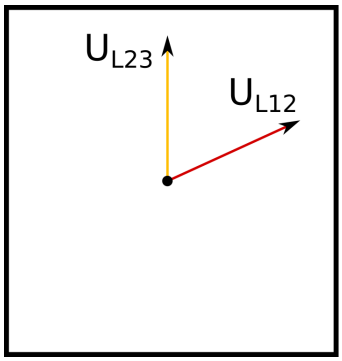

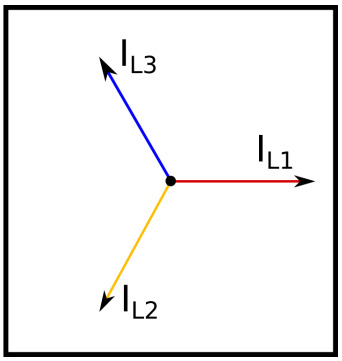

$$S = U_{12} \times I_{L1} + U_{23} \times I_{L2}$$

$$S = 100\ \text{V} \times 2.5\ \text{A} + 100\ \text{V} \times 2.5\ \text{A} = 500\ \text{VA (sec)}\ 20.00\ \text{MVA (pri)}$$

$$P = U_{12} \times I_{L1} \cos(-\varphi) + U_{23} \times I_{L2} \cos(\varphi)$$

$$P = 100\ \text{V} \times 2.5\ \text{A} \cos -(30° - 0°) + 100\ \text{V} \times 2.5\ \text{A} \cos(270° - 240°) = 433\ \text{W}\ (sec)\ 17.32\ \text{MW}\ (pri)$$

$$Q = U_{12} \times I_{L1} + \sin(-\varphi) + U_{23} \times I_{L2} \sin(\varphi)$$

$$Q = 100\ \text{V} \times 2.5\ \text{A} \sin -(30° - 0°) + 100\ \text{V} \times 2.5\ \text{A} \sin(270° - 240°) = 0\ \text{var (sec)}\ 0\ \text{Mvar}\ (pri)$$

$$3PH\ Tan(phi) = {}^{Q}/_{P} = {}^{0.01}/_{17.32} = 0.00 \qquad 3PH\ Cos(phi) = {}^{P}/_{S} = {}^{17.32}/_{20.00} = 0.87$$

Name	Values
3PH (S)	20.00 MVA
3PH (P)	17.32 MW
3PH (Q)	0.00 Mvar
3PH Tan	0.00
3PH Cos	0.87

4.2.4 Frequency tracking and scaling

Measurement sampling can be set to the frequency tracking mode or to the fixed user-defined frequency sampling mode. The benefit of frequency tracking is that the measurements are within a pre-defined accuracy range even when the fundamental frequency of the power system changes.

Table. 4.2.4 - 46. Frequency tracking effect (FF changes from 6 Hz to 75 Hz).

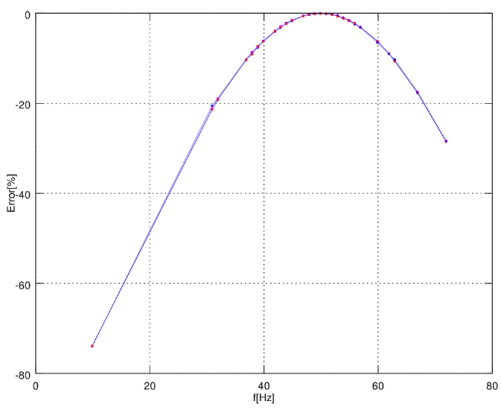	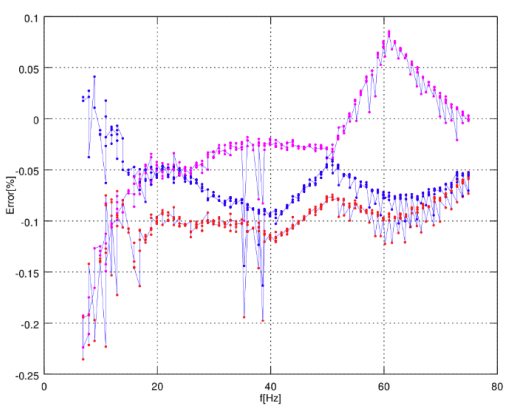
The measurement error with a fixed 50 Hz sampling frequency when the frequency changes. The constant current is 5 A, the frequency sweep is from 6 Hz to 75 Hz.	The measurement error with frequency tracking when the frequency changes. The constant current is 5 A, the frequency sweep is from 6 Hz to 75 Hz.

© Arcteq Relays Ltd
IM00021

As the figures above show, the sampling frequency has a major effect on the device's measurement accuracy. If the sampling is not tracked to the system frequency, for example a 10 Hz difference between the measured and the set system frequency can give a measurement error of over 5 %. The figures also show that when the frequency is tracked and the sampling is adjusted according to the detected system frequency, the measurement accuracy has an approximate error of 0.1...- 0.2 % error in the whole frequency range.

The device has a measurement accuracy that is independent of the system frequency. This has been achieved by adjusting the sample rate of the measurement channels according to the measured system frequency; this way the FFT calculation always has a whole power cycle in the buffer. The measurement accuracy is further improved by Arcteq's patented calibration algorithms that calibrate the analog channels against eight (8) system frequency points for both magnitude and angle. This frequency-dependent correction compensates the frequency dependencies in the used, non-linear measurement hardware and improves the measurement accuracy significantly. Combined, these two methods give an accurate measurement result that is independent of the system frequency.

Troubleshooting

When the measured current, voltage or frequency values differ from the expected values, the following table offers possible solutions for the problems.

Problem	Check / Resolution
The measured current or voltage amplitude is lower than it should be./ The values are "jumping" and are not stable.	The set system frequency may be wrong. Please check that the frequency settings match the local system frequency, or change the measurement mode to "Tracking" (*Measurement* → *Frequency* → "Sampling mode") so the device adjusts the frequency itself.
The frequency readings are wrong.	In Tracking mode the device may interpret the frequency incorrectly if no current is injected into the CT (or voltage into the VT). Please check the frequency measurement settings (*Measurement* → *Frequency*).

Settings

Table. 4.2.4 - 47. Settings of the frequency tracking.

Name	Range	Step	Default	Description
Sampling mode	• Fixed • Tracking	-	Fixed	Defines which measurement sampling mode is in use: the fixed user-defined frequency, or the tracked system frequency.
System nominal frequency	7.000…75.000Hz	0.001Hz	50Hz	The user-defined system nominal frequency that is used when the "Sampling mode" setting has been set to "Fixed".
Tracked system frequency	0.000…75.000Hz	0.001Hz	-	Displays the rough measured system frequency.
Sampling frequency in use	0.000…75.000Hz	0.001Hz	-	Displays the tracking frequency that is in use at that moment.

Name	Range	Step	Default	Description
Frequency reference 1	• None • CT1IL1 • CT2IL1 • VT1U1 • VT2U1	-	CT1IL1	The first reference source for frequency tracking.
Frequency reference 2	• None • CT1IL2 • CT2IL2 • VT1U2 • VT2U2	-	CT1IL2	The second reference source for frequency tracking.
Frequency reference 3	• None • CT1IL3 • CT2IL3 • VT1U3 • VT2U3	-	CT1IL3	The third reference source for frequency tracking.
Frequency tracking quality	• No trackable channels • Reference 1 trackable • Reference 2 trackable • References 1 & 2 trackable • Reference 3 trackable • Reference 1 & 3 trackable • References 2 & 3 trackable • All references trackable	-	-	Defines the frequency tracker quality. If the measured current (or voltage) amplitude is below the threshold, the channel tracking quality is 0 and cannot be used for frequency tracking. If all channels' magnitudes are below the threshold, there are no trackable channels.
Frequency measurement in use	• No track ch • Ref1 • Ref2 • Ref3	-	-	Indicates which reference is used at the moment for frequency tracking.
Start behavior	• Start tracking immediately • First nominal or tracked	-	Start tracking immediately	Defines the how the tracking starts. Tracking can start immediately, or there can be a set delay time between the receiving of the first trackable channel and the start of the tracking.
Start sampling with	• Use track frequency • Use nom frequency	-	Use track frequency	Defines the start of the sampling. Sampling can begin with a previously tracked frequency, or with a user-set nominal frequency.
Use nominal frequency until	0…1800.000s	0.005s	0.100s	Defines how long the nominal frequency is used after the tracking has started. This setting is only valid when the "Sampling mode" setting is set to "Tracking" and when the "Start behavior" is set to "First nominal or tracked".
Tracked f channel A	0.000…75.000Hz	0.001Hz	-	Displays the rough value of the tracked frequency in Channel A.

© Arcteq Relays Ltd
IM00021

Name	Range	Step	Default	Description
Tracked f channel B	0.000…75.000Hz	0.001Hz	-	Displays the rough value of the tracked frequency in Channel B.
Tracked f channel C	0.000…75.000Hz	0.001Hz	-	Displays the rough value of the tracked frequency in Channel C.
System measured frequency	• One f measured • Two f measured • Three f measured	-	-	Displays the amount of frequencies that are measured.
f.atm. Protections	0.000…75.000Hz	0.001Hz	-	Frequency measurement value used by protection functions. When frequency is not measurable this value returns to value set to "System nominal frequency" parameter.
f.atm. Display	0.000…75.000Hz	0.001Hz	-	Frequency measurement value used in display. When frequency is not measurable this value is "0 Hz".
f measurement from	• Not measurable • Avg Ref 1 • Avg Ref 2 • Avg Ref 3 • Track Ref 1 • Track Ref 2 • Track Ref 3 • Fast Ref 1 • Fast Ref 2 • Fast Ref 3	-	-	Displays which reference is used for frequency measurement.
SS1.meas.frqs	0.000…75.000Hz	0.001Hz	-	Displays frequency used by "system set" channel 1 and 2.
SS2.meas.frqs				
SS1f meas.from	• Not measurable • Fast Ref U3 • Fast Ref U4	-	-	Displays which voltage channel frequency reference is used by "system set" voltage channel.
SS2f meas.from	• Not measurable • Fast Ref U4	-	-	Displays if U4 channel frequency reference is measurable or not when the channel has been set to "system set" mode.

4.3 General menu

The *General* menu consists of basic settings and indications of the device. Additionally, the all activated functions and their status are displayed in the *Protection*, *Control* and *Monitor* profiles.

Table. 4.3 - 48. The *General* menu read-only parameters

Name	Description
Serial number	The unique serial number identification of the unit.

Name	Description
Firmware version	The firmware software version of the unit.
Hardware configuration	The order code identification of the unit.
System phase rotating order at the moment	The selected system phase rotating order. Can be changed with parameter "System phase rotating order".
UTC time	The UTC time value which the device's clock uses.

Table. 4.3 - 49. Parameters and indications in the *General* menu.

Name	Range	Default	Description
Device name	-	Unitname	The file name uses these fields when loading the .aqs configuration file from the device.
Device location	-	Unitlocation	
Enable stage forcing	• Disabled • Enabled	Disabled	When this parameter is enabled it is possible for the user to force the protection, control and monitoring functions to different statuses like START and TRIP. This is done in the function's *Info* page with the *Force status to* parameter.
Allow setting of device mode	• Prohibited • From HMI/ setting tool only • Allowed	Prohibited	Allows global mode to be modified from setting tool, HMI and IEC61850. Prohibited: Cannot be changed. From HMI/setting tool only: Can only be changed from the setting tool or HMI Allowed: Can be changed from the setting tool, HMI, and IEC 61850 client.
Allow setting of individual LN mode	• Prohibited • From HMI/ setting tool only • Allowed	Prohibited	Allow local modes to be modified from setting tool, HMI and IEC61850. Prohibited: Cannot be changed. From HMI/setting tool only: Can only be changed from the setting tool or HMI Allowed: Can be changed from the setting tool, HMI, and IEC 61850 client.
System phase rotating order	• A-B-C • A-C-B	A-B-C	Allows the user to switch the expected order in which the phase measurements are wired to the unit.
Language	• User defined • English • Finnish • Chinese • Spanish • French • German • Russian • Ukrainian • Kazakh	English	Changes the language of the parameter descriptions in the HMI. If the language has been set to "Other" in the settings of the AQtivate setting tool, AQtivate follows the value set into this parameter.

© Arcteq Relays Ltd
IM00021

Name	Range	Default	Description
AQtivate ethernet port	• All • COM A • Double Ethernet card	All	If the device has a double Ethernet option card it is possible to choose which ports are available for connecting with AQtivate software.
Clear events	• - • Clear	-	Clears the event history recorded in the device.
Display brightness	0…8	4	Changes the display brightness. Brightness level 0 turns the display off.
Display sleep timeout	0…3600s	0s	If no buttons are pressed after a set time, the display changes the brightness to whatever is set on the "Display sleep brightness" parameter. If set to 0 s, this feature is not in use. When the device is in sleep mode, all button actions are disabled. Pressing any of the buttons on the front panel will wake up the display, which enables the buttons again.
Display sleep brightness	0…8	0	Defines the brightness of the display when the set display sleep timeout has elapsed. The brightness level "0" turns the display off.
Return to default view	0…3600s	0s	If the user navigates to a menu and gives no input after a period of time defined with this parameter, the unit automatically returns to the default view. If set to 0 s, this feature is not in use.
LED test	• - • Activated	-	When activated, all LEDs are lit up. LEDs with multiple possible colors blink each color.
HMI restart	• - • Restart	-	When activated, display restarts.
Display color theme	• Light theme • Dark theme	Light theme	Defines the color theme used in the HMI.
Reset latches	• - • Reset	-	Resets the latched signals in the logic and the matrix. When a reset command is given, the parameter automatically returns back to "-".
Measurement recorder	• Disabled • Enabled	Disabled	Enables the measurement recorder tool, further configured in *Tools → Misc → Measurement recorder.*
I/0 default object selection	• OBJ1 • OBJ2 • OBJ3 • OBJ4 • OBJ5 • OBJ6 • OBJ7 • OBJ8 • OBJ9 • OBJ10	OBJ1	"I" and "0" push buttons on the front panel of the device have an indication LED. This parameter defines which objects' status push buttons follow when lighting up the LEDs.

Name	Range	Default	Description
Device Mode	• On • Blocked • Test • Test/ Blocked • Off	On	Set mode of device block. This parameter is visible only when *Allow setting of device mode* is enabled in *General* menu.
Reconfigure mimic	• - • Reconfigure	-	Reloads the mimic to the unit.

Table. 4.3 - 50. General menu logical inputs.

Name	Description
Reset last fault registers	Signal set to this point can be used for resetting latest recorded fault register.
Reset latches	Signals set to this point can be used for resetting latched signals. An alternative to using the "Back" button on the front panel of the device.
Ph.Rotating Logic control 0=A-B-C, 1=A-C-B	Signals set to this point can be used for switching the expected phase rotating order.

4.4 Protection functions

4.4.1 General properties of a protection function

The following flowchart describes the basic structure of any protection function. The basic structure is composed of analog measurement values being compared to the pick-up values and operating time delay characteristics.

© Arcteq Relays Ltd
IM00021

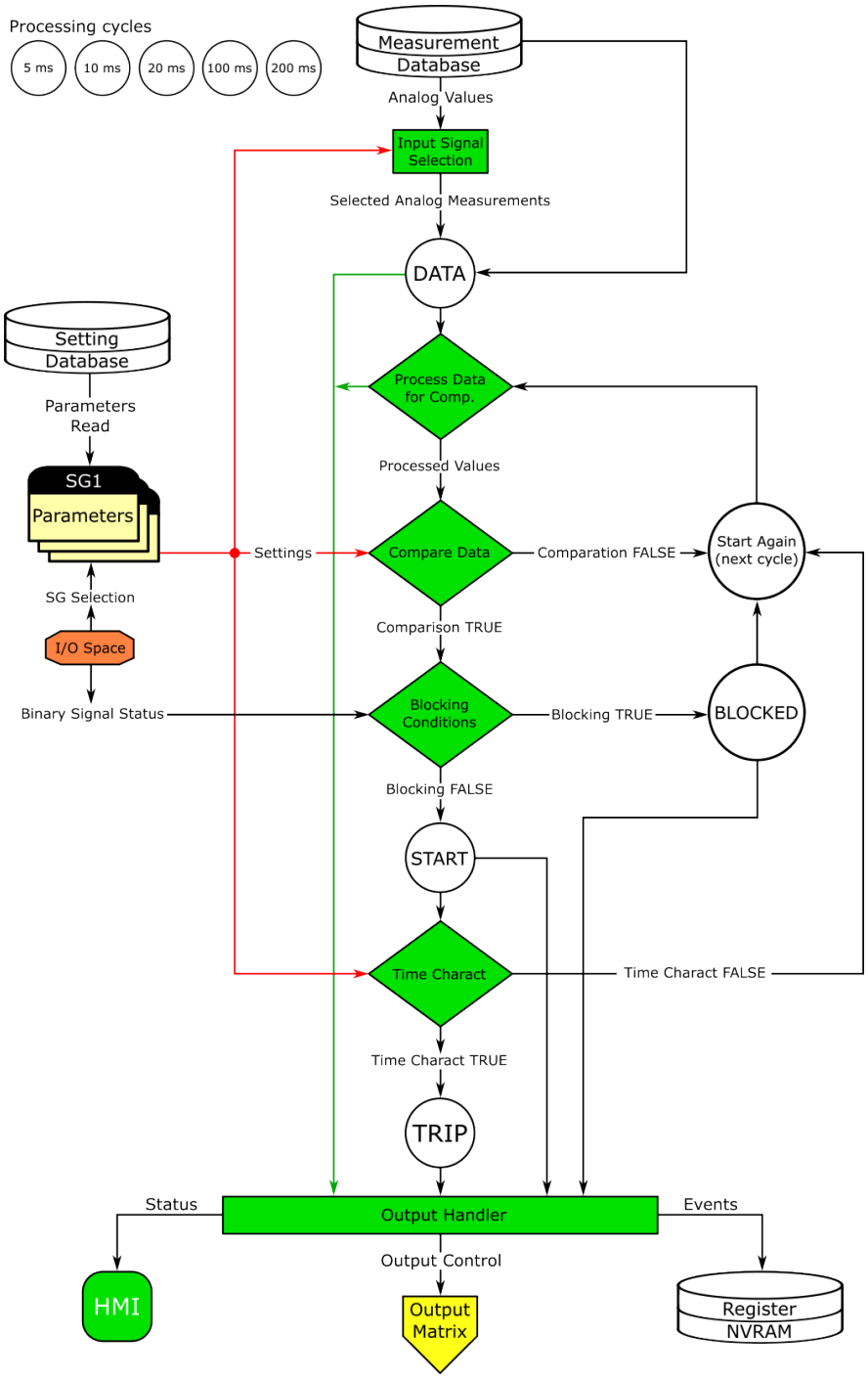

The protection function is run in a completely digital environment with a protection CPU microprocessor which also processes the analog signals transformed into the digital form.

In the following chapters the common functionalities of protection functions are described. If a protection function deviates from this basic structure, the difference is described in the corresponding chapter of the manual.

Pick-up

The X_{set} parameter defines the pick-up level of the function, and this in turn defines the maximum or minimum allowed measured magnitude (in per unit, absolute or percentage value) before the function takes action. The function constantly calculates the ratio between the pick-up parameter set by the user and the measured magnitude (X_m). The reset ratio of 97 % is built into the function and is always relative to the X_{set} value. If a function's pick-up characteristics vary from this description, they are defined in the function section in the manual.

Figure. 4.4.1 - 20. Pick up and reset.

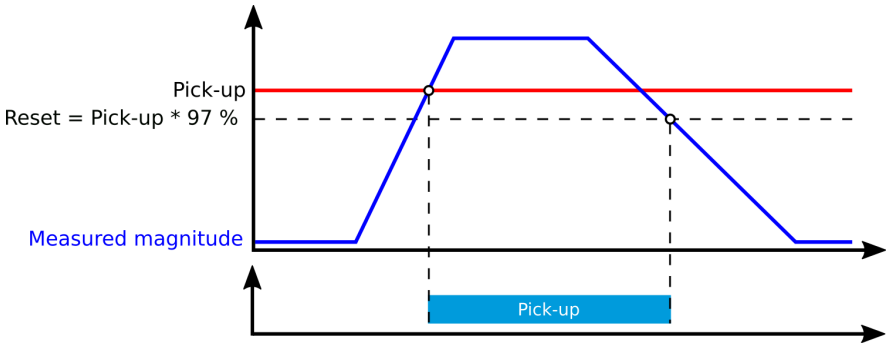

Figure. 4.4.1 - 21. Measurement range in relation to the nominal current.

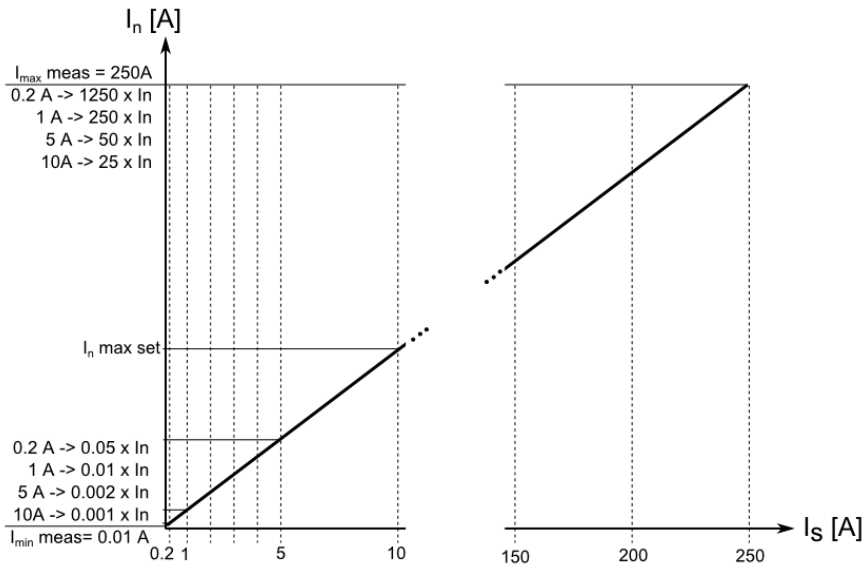

The I_n magnitude refers to the user set nominal current which can range from 0.2…10 A, typically 0.2 A, 1A or 5 A. With its own current measurement card, the device will measure secondary currents from 0.001 A up to 250 A. To this relation the pick-up setting in secondary amperes will vary.

Function blocking

The blocking signal is evaluated at the start of each program cycle. The blocking signals are connected to the function's dedicated input, which can be configured in the *IO → Blocking Input Control* tab of the function.

- When the pick-up element activates and the blocking signal is not active, a START signal is generated, and the function starts or continues with the trip time countdown.
- When the pick-up element activates and the blocking signal is active, a BLOCKED signal is generated, and the function does not process the event further.

© Arcteq Relays Ltd
IM00021

- When a START signal is already active and the blocking input signal becomes active, the START signal is reset and BLOCKED signal is generated. The release time characteristics are then processed in the same way as when the pick-up signal is reset.

The blocking signal needs to reach the device minimum of 5 ms before the set operating delay has passed in order for the blocking to activate in time. Blocking of the function causes a time stamped blocking event with information of the startup current values and its fault type to be issued.

Some functions also offer an optional internal inrush harmonic blocking feature. If the inrush harmonic pick-up is active at the same time as the protection function pick-up element, the trip delay timer continues counting down as normal. Once the countdown reaches zero, if the pick-up element remains active and the second harmonic value has dropped, the function issues a trip.

Table. 4.4.1 - 51. Internal inrush harmonic blocking settings.

Name	Range	Step	Default	Description
Inrush harmonic blocking (internal-only trip)	• No • Yes	-	• No	Enables and disables the 2nd harmonic blocking.
2nd harmonic blocking limit (Iharm/Ifund)	0.10…50.00%I_{fund}	0.01%I_{fund}	0.01%I_{fund}	Defines the limit of the 2nd harmonic blocking.

Operating time characteristics

Three basic modes are available for delaying function operation:

- Instant operation: activates the trip signal simultaneously with the start signal with no additional time delay.
- Definite time operation (DT): activates the trip signal after a user-defined time delay regardless of themagnitude of the measured value(s) as long as the pick-up element is active.
- Inverse definite minimum time (IDMT): activates the trip signal after a time which is in relation to the set pick-up value and the measured value.

Both IEC and IEEE/ANSI standard characteristics as well as user settable parameters are available for the IDMT operation. Please note that in the IDMT mode *Definite (minimum)operating time delay* also determines the minimum time for protection tripping (see the figure below). If this function is not desired the parameter should be set to 0 seconds.

Figure. 4.4.1 - 22. Operating time delay: *Definite (minimum) operating time delay* and the minimum for tripping.

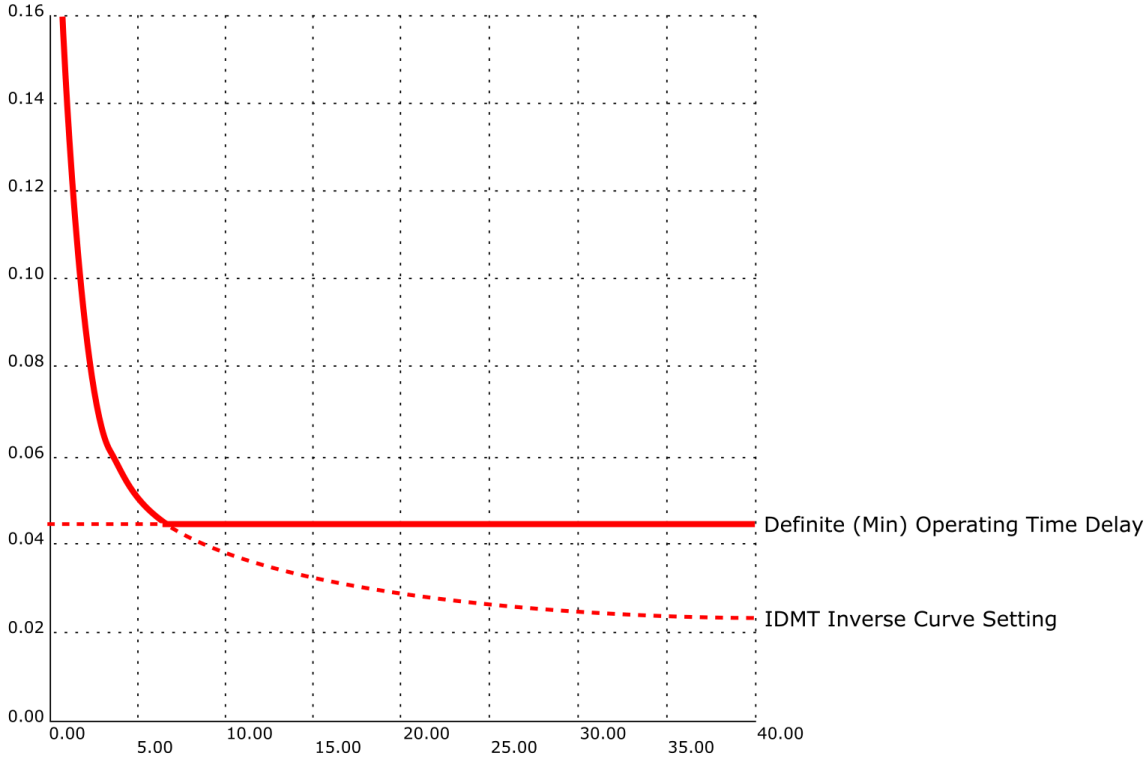

Table. 4.4.1 - 52. Operating time characteristics setting parameters (general).

Name	Range	Step	Default	Description
Delay type	• DT • IDMT	-	DT	Selects the delay type for the time counter. The selection is made between "Inverse definite minimum time" (IDMT) and "Definite time operation" (DT) characteristics.
Definite (minimum) operating time delay	0.000…1800.000s	0.005s	0.040s	When the "Delay type" parameter is set to "DT", this parameter acts as the expected operating time for the protection function. When set to 0 s, the stage operates instantaneously without any additional delay. When the parameter is set to 0.005...1800 s, the stage operates as independent delayed. When the "Delay type" parameter has been set to "IDMT", this parameter can be used to determine the minimum operating time for the protection function. Example of this is presented in the figure above.
Delay curve series	• IEC • IEEE	-	IEC	Selects whether the delay curve series for an IDMT operation follows either IEC or IEEE/ANSI standard defined characteristics. This setting is active and visible when the "Delay type" parameter is set to "IDMT".

© Arcteq Relays Ltd
IM00021

Name	Range	Step	Default	Description
Delay characteristics IEC	• NI • EI • VI • LTI • Param	-	NI	Selects the IEC standard delay characteristics. The options include the following: Normally Inverse ("NI"), Extremely Inverse ("EI"), Very Inverse ("VI") and Long Time Inverse ("LTI") characteristics. Additionally, the "Param" option allows the tuning of the constants A and B which then allows the setting of characteristics following the same formula as the IEC curves mentioned here. This setting is active and visible when the "Delay type" parameter is set to "IDMT" and the "Delay curve series" parameter is set to "IEC".
Delay characteristics IEEE	• ANSI NI • ANSI VI • ANSI EI • ANSI LTI • IEEE MI • IEEE VI • IEEE EI • Param	-	ANSI NI	Selects the IEEE and ANSI standard delay characteristics. The options for ANSI include the following: Normal Inverse ("ANSI NI"), Very Inverse ("ANSI VI"), Extremely inverse ("ANSI EI"), Long time inverse ("ANSI LTI") characteristics. IEEE: Moderately Inverse ("IEEE MI"), Very Inverse ("IEEE VI"), Extremely Inverse ("IEEE EI") characteristics. Additionally, the "Param" option allows the tuning of the constants A, B and C which then allows the setting of characteristics following the same formula as the IEEE curves mentioned here. This setting is active and visible when the "Delay type" parameter is set to "IDMT" and the "Delay curve series" parameter is set to "IEEE".
Time dial setting k	0.01…25.00s	0.01s	0.05s	Defines the time dial/multiplier setting for IDMT characteristics. This setting is active and visible when the "Delay type" parameter is set to "IDMT".
A	0.0000…250.0000	0.0001	0.0860	Defines the Constant A for IEC/IEEE characteristics. This setting is active and visible when the "Delay type" parameter is set to "IDMT" and the "Delay characteristic" parameter is set to "Param".
B	0.0000…250.0000	0.0001	0.1850	Defines the Constant B for IEC/IEEE characteristics. This setting is active and visible when the "Delay type" parameter is set to "IDMT" and the "Delay characteristic" parameter is set to "Param".
C	0.0000…250.0000	0.0001	0.0200	Defines the Constant C for IEEE characteristics. This setting is active and visible when the "Delay type" parameter is set to "IDMT" and the "Delay characteristic" parameter is set to "Param".

Figure. 4.4.1 - 23. Inverse definite minimum time formulas for IEC and IEEE standards.

<table>
<tr><th>IEC</th><th>IEEE/ANSI</th></tr>
<tr><td>$$t = \frac{kA}{\left(\frac{I_m}{I_{set}}\right)^B - 1}$$</td><td>$$t = k\left(\frac{A}{\left(\frac{I_m}{I_{set}}\right)^C - 1} + B\right)$$</td></tr>
<tr><td>t = Operating delay (s)
k = Time dial setting
I_m = Measured maximum current
I_{set} = Pick-up setting
A = Operating characteristics constant
B = Operating characteristics constant</td><td>t = Operating delay (s)
k = Time dial setting
I_m = Measured maximum current
I_{set} = Pick-up setting
A = Operating characteristics constant
B = Operating characteristics constant
C = Operating characteristics constant</td></tr>
<tr><td>Standard delays IEC constants
<table>
<tr><th>Type</th><th>A</th><th>B</th></tr>
<tr><td>Normally Inverse (NI)</td><td>0,14</td><td>0,02</td></tr>
<tr><td>Extremely Inverse (EI)</td><td>80</td><td>2</td></tr>
<tr><td>Very Inverse (VI)</td><td>13,5</td><td>1</td></tr>
<tr><td>Long Time Inverse (LTI)</td><td>120</td><td>1</td></tr>
</table></td><td>Standard delays ANSI constants
<table>
<tr><th>Type</th><th>A</th><th>B</th><th>C</th></tr>
<tr><td>Normally Inverse (NI)</td><td>8,934</td><td>0,1797</td><td>2,094</td></tr>
<tr><td>Very Inverse (VI)</td><td>3,922</td><td>0,0982</td><td>2</td></tr>
<tr><td>Extremely Inverse (EI)</td><td>5,64</td><td>0,02434</td><td>2</td></tr>
<tr><td>Long Time Inverse (LTI)</td><td>5,614</td><td>2,186</td><td>1</td></tr>
</table>
Standard delays IEEE constants
<table>
<tr><th>Type</th><th>A</th><th>B</th><th>C</th></tr>
<tr><td>Moderately Inverse (MI)</td><td>0,0515</td><td>0,114</td><td>0,02</td></tr>
<tr><td>Very Inverse (VI)</td><td>19,61</td><td>0,491</td><td>2</td></tr>
<tr><td>Extremely Inverse (EI)</td><td>28,2</td><td>0,1217</td><td>2</td></tr>
</table></td></tr>
</table>

Non-standard delay characteristics

In addition to the previously mentioned delay characteristics, some functions also have delay characteristics that deviate from the IEC or IEEE standards. These functions are the following:

- non-directional overcurrent stages
- non-directional earth fault stages
- directional overcurrent stages
- directional earth fault stages.

The setting parameters and their ranges are documented in the chapters of the respective function blocks.

Table. 4.4.1 - 53. Inverse definite minimum time formulas for nonstandard characteristics.

RI-type	RD-type
Used for getting the time grading with mechanical relays.	Mostly used in earth fault protection which grants selective tripping even in non-directional protection.
$$t = \frac{k}{0.339 - 0.236 * \frac{I_{set}}{I_m}}$$	$$t = 5.8 - 1.35 * \ln\left(\frac{I_m}{k * I_{set}}\right)$$
t = Operation delay (s) k = Time dial setting I_m = Measured maximum current I_{set} = Pick-up setting	t = Operation delay (s) k = Time dial setting I_m = Measured maximum current I_{set} = Pick-up setting

© Arcteq Relays Ltd
IM00021

NOTICE!
When using RD-type and "k" has been set lower than 0.3 calculated operation time can be lower than 0 seconds with some measurement values. In these cases operation time will be instant.

When using the release delay option where the operating time counter is calculating the operating time during the release time, the function will not trip if the input signal is not activated again during the release time counting.

The behavior of the stages with different release time configurations are presented in the figures below.

Table. 4.4.1 - 54. Setting parameters for reset time characteristics.

Name	Range	Step	Default	Description
Delayed pick-up release	• No • Yes	-	Yes	Resetting characteristics selection (either time-delayed or instant) after the pick-up element is released. If set to "Yes", the START signal is reset after a set release time delay.
Release time delay	0.000…150.000s	0.005s	0.06s	Resetting time. The time allowed between pick-ups if the pick-up has not led into a trip operation. If the "Delayed pick-up release" setting is set to "Yes", the START signal is held on for the duration of the timer.
Op.Time calculation reset after release time	• No • Yes	-	Yes	Operating timer resetting characteristics selection. When set to "Yes", the operating time counter is reset after a set release time if the pick-up element is not activated during this time. When set to "No", the operating time counter is reset directly after the pick-up element is reset.
Continue time calculation during release time	• No • Yes	-	No	Time calculation characteristics selection. If set to "Yes", the operating time counter continues until a set release time even if the pick-up element is reset.

Figure. 4.4.1 - 24. No delayed pick-up release.

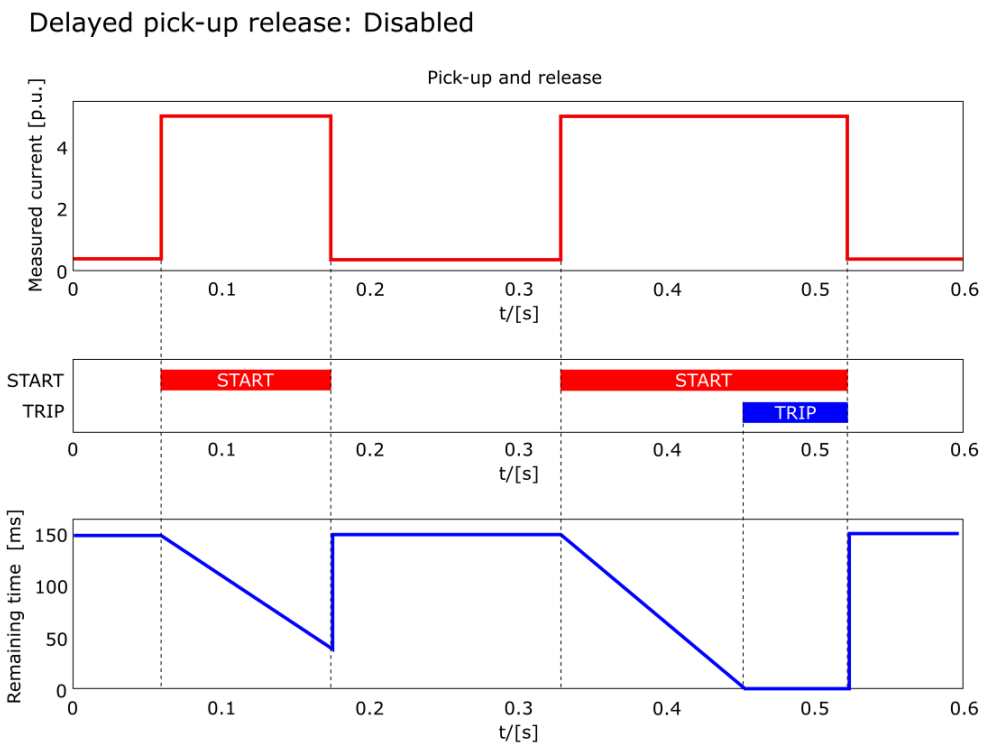

Figure. 4.4.1 - 25. Delayed pick-up release, delay counter is reset at signal drop-off.

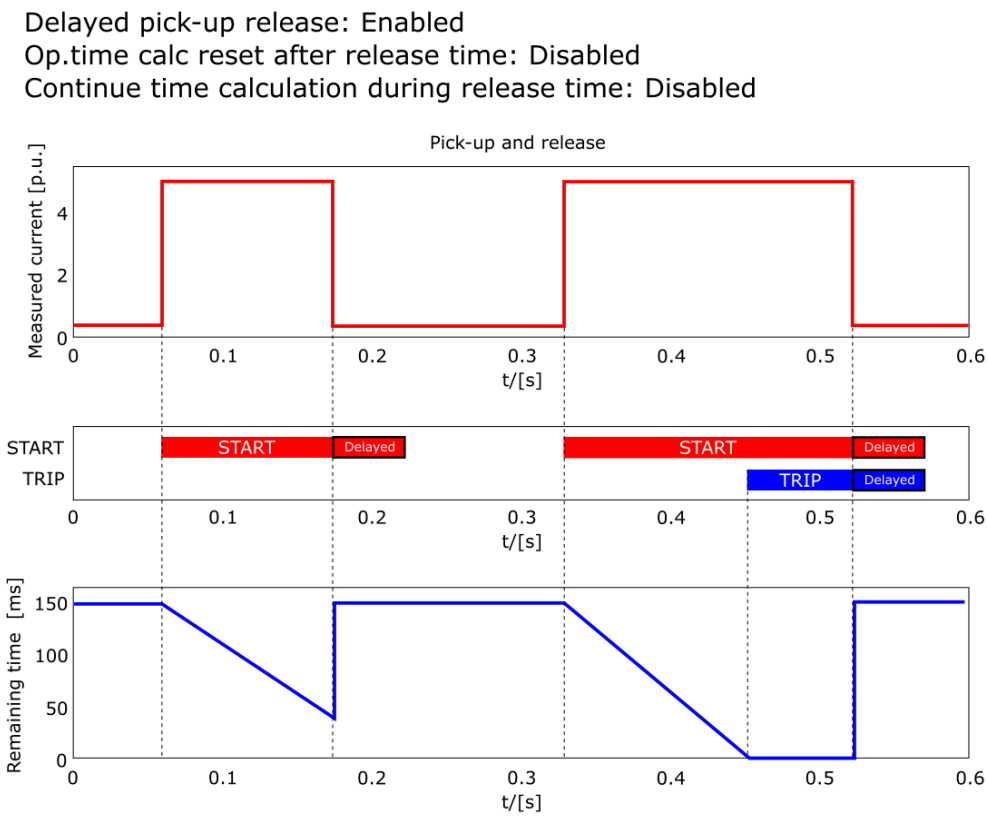

© Arcteq Relays Ltd
IM00021

Figure. 4.4.1 - 26. Delayed pick-up release, delay counter value is held during the release time.

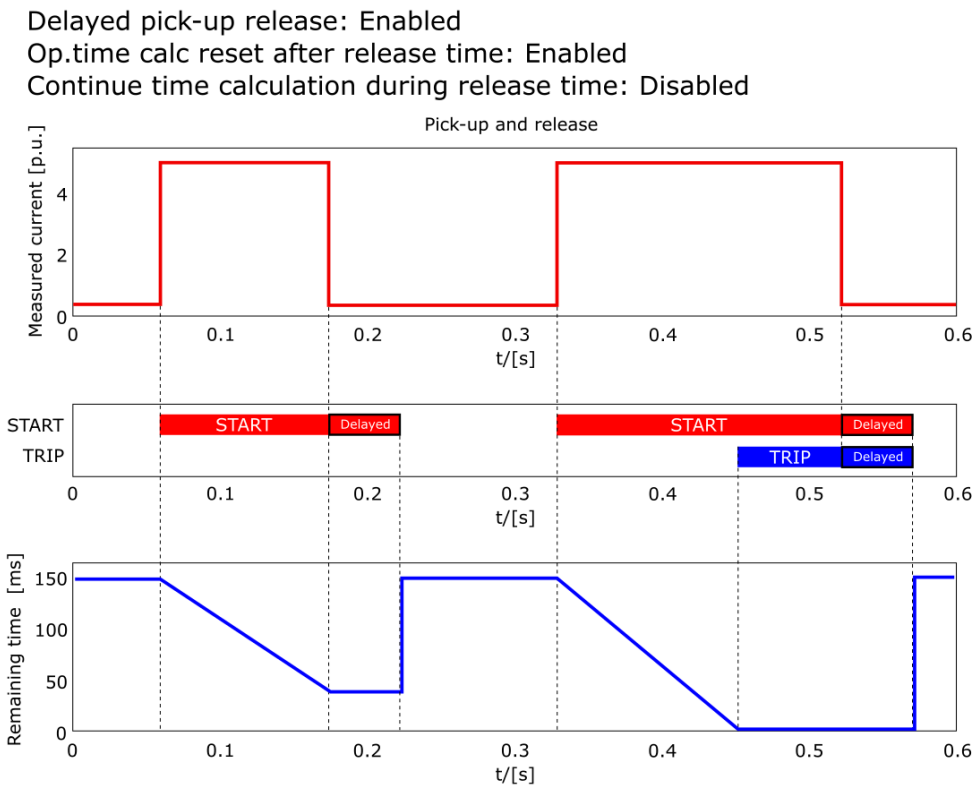

Figure. 4.4.1 - 27. Delayed pick-up release, delay counter value is decreasing during the release time.

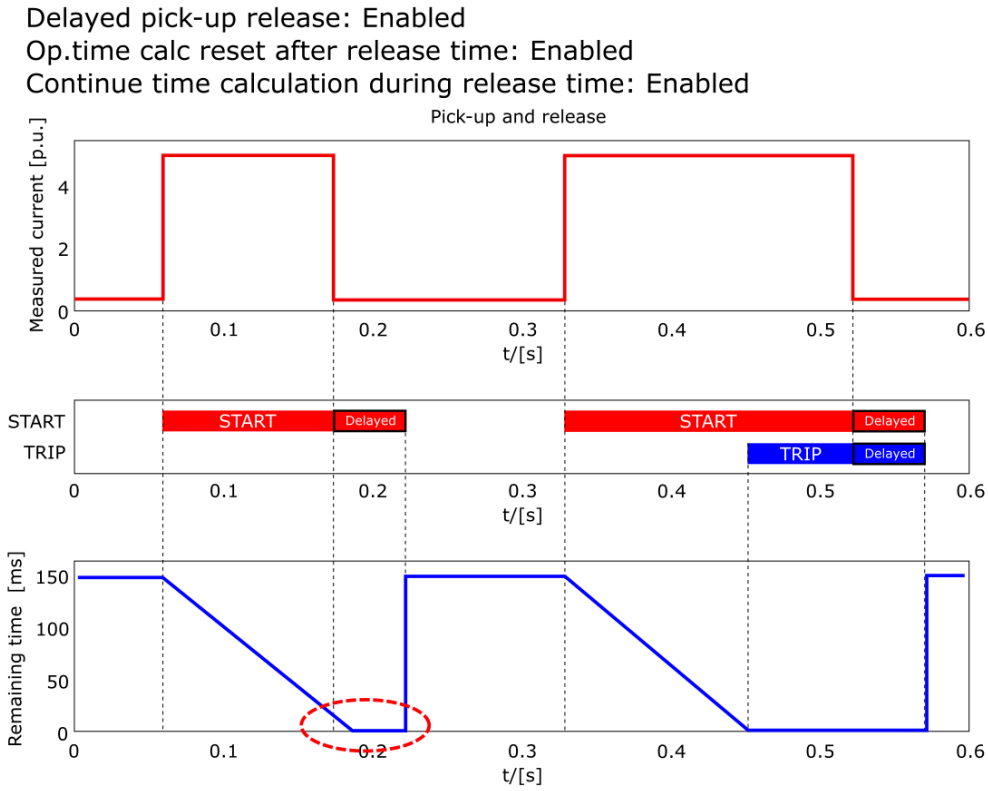

Stage forcing

It is possible to test the logic, event processing and the operation of the device's logic by controlling the state of the protection functions manually without injecting any current into the device with stage forcing. To enable *Stage forcing* set the *Enable stage forcing* to ENABLED in the *General* menu. After this it is possible to control the status of a protection function (Normal, Start, Trip, Blocked etc.) in the *Info* page of the function.

> NOTICE!
> When *Stage forcing* is enabled protection functions will also change state through user input. Injected currents/voltages also affect the behavior of the device. Regardless, it is recommended to disable *Stage Forcing* after testing has ended.

4.4.2 Non-directional overcurrent protection (I>; 50/51)

The non-directional overcurrent function is used for instant and time-delayed overcurrent and short-circuit protection. The function is used for one-phase, two-phase or three-phase overcurrent and short circuit protection. The function offers four (4) independent stages. The operating decisions are based on phase current magnitude, constantly measured by the function.

Figure. 4.4.2 - 28. Simplified function block diagram of the I> function.

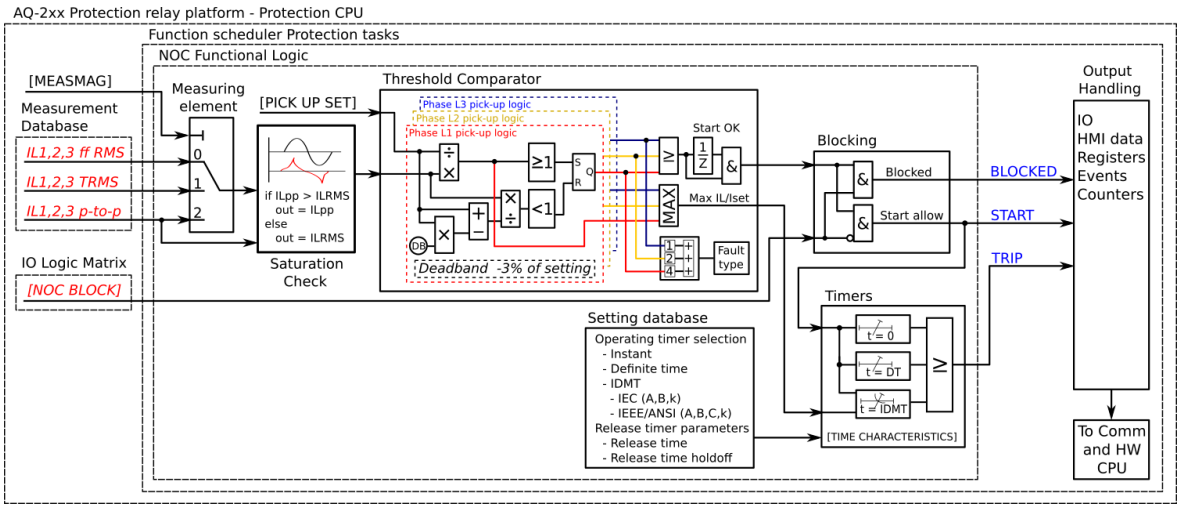

Measured input

The function block uses phase current measurement values. The user can select the monitored magnitude to be equal either to RMS values (fundamental frequency component), to TRMS values from the whole harmonic specter of 32 components, or to peak-to-peak values.

Table. 4.4.2 - 55. Measurement inputs of the I> function.

Signal	Description
I_{L1}RMS	Fundamental frequency component of phase L1 (A) current measurement
I_{L2}RMS	Fundamental frequency component of phase L2 (B) current measurement
I_{L3}RMS	Fundamental frequency component of phase L3 (C) current measurement
I_{L1}TRMS	TRMS measurement of phase L1 (A) current

© Arcteq Relays Ltd
IM00021

Signal	Description
I_{L2}TRMS	TRMS measurement of phase L2 (B) current
I_{L3}TRMS	TRMS measurement of phase L3 (C) current
I_{L1}PP	Peak-to-peak measurement of phase L1 (A) current
I_{L2}PP	Peak-to-peak measurement of phase L2 (B) current
I_{L3}PP	Peak-to-peak measurement of phase L3 (C) current

General settings

The following general settings define the general behavior of the function. These settings are static i.e. it is not possible to change them by editing the setting group.

Table. 4.4.2 - 56. General settings of the function.

Name	Range	Default	Description
Setting control from comm bus	• Disabled • Allowed	• Disabled	Activating this parameter allows changing the pick-up level of the protection stage via SCADA.
I> LN mode	• On • Blocked • Test • Test/ Blocked • Off	• On	Set mode of NOC block. This parameter is visible only when *Allow setting of individual LN mode* is enabled in *General* menu.
I> Number of phases to trip	• 1 of 3 • 2 of 3 • 3 of 3	• 1 of 3	Defines how many phases must detect overcurrent before the function issues a trip command.
I> force status to	• Normal • Start • Trip • Blocked • Start A • Start B • Start C • Trip A • Trip B • Trip C • Start AB • Start BC • Start CA • Start ABC • Trip AB • Trip BC • Trip CA • Trip ABC	• Normal	Force the status of the function. Visible only when *Enable stage forcing* parameter is enabled in *General* menu.

Name	Range	Default	Description
Measured magnitude	• RMS • TRMS • Peak-to-peak	• RMS	Defines which available measured magnitude is used by the function.
Measurement side	• Side 1 • Side 2	• Side 1	Defines which current measurement module is used by the function.

Pick-up settings

The I_{set} setting parameter controls the pick-up of the I> function. This defines the maximum allowed measured current before action from the function. The function constantly calculates the ratio between the I_{set} and the measured magnitude (I_m) for each of the three phases. The reset ratio of 97 % is built into the function and is always relative to the I_{set} value. The setting value is common for all measured phases, and when the I_m exceeds the I_{set} value (in single, dual or all phases) it triggers the pick-up operation of the function.

Setting group selection controls the operating characteristics of the function, i.e. the user or user-defined logic can change function parameters while the function is running.

Table. 4.4.2 - 57. Pick-up settings.

Name	Range	Step	Default	Description
I_{set}	0.10…50.00×I_n	0.01×I_n	1.20×I_n	Pick-up setting

Read-only parameters

The function's *Info* page displays useful, real-time information on the state of the protection function. It is accessed either through the device's HMI display, or through the setting tool software when it is connected to the device and its Live Edit mode is active.

Table. 4.4.2 - 58. Information displayed by the function.

Name	Range	Step	Description
I> LN behaviour	• On • Blocked • Test • Test/Blocked • Off	-	Displays the mode of NOC block. This parameter is visible only when *Allow setting of individual LN mode* is enabled in *General* menu.
I> condition	• Normal • Start • Trip • Blocked	-	Displays status of the protection function.

© Arcteq Relays Ltd
IM00021

Name	Range	Step	Description
I> phases condition	• Normal • Start A • Start B • Start C • Trip A • Trip B • Trip C • Start AB • Start BC • Start CA • Start ABC • Trip AB • Trip BC • Trip CA • Trip ABC	-	Displays the status of phases individually.
Expected operating time	0.000...1800.000s	0.005s	Displays the expected operating time when a fault occurs. When IDMT mode is used, the expected operating time depends on the measured highest phase current value. If the measured current changes during a fault, the expected operating time changes accordingly.
Time remaining to trip	-1800.000...1800.000s	0.005s	When the function has detected a fault and counts down time towards a trip, this displays how much time is left before tripping occurs.
I_{meas}/I_{set} at the moment	0.00...1250.00	0.01	The ratio between the highest measured phase current and the pick-up value.

Function blocking

The blocking signal is evaluated at the start of each program cycle. The blocking signals are connected to the function's dedicated input, which can be configured in the *IO → Blocking Input Control* tab of the function.

- When the pick-up element activates and the blocking signal is not active, a START signal is generated and the function starts or continues the trip-time countdown.
- When the pick-up element activates while the blocking signal is active, START and BLOCKED signals are generated, but no further processing is performed.
- If a START signal is already active when the blocking input signal becomes active, the release-time characteristics are processed as if the fault condition had been cleared.

The blocking signal needs to reach the device minimum of 5 ms before the set operating delay has passed in order for the blocking to activate in time.

The function also offers an optional internal inrush harmonic blocking feature. If the inrush harmonic pick-up is active at the same time as the protection function pick-up element, the trip delay timer continues counting down as normal. Once the countdown reaches zero, if the pick-up element remains active and the second harmonic value has dropped, the function issues a trip.

Table. 4.4.2 - 59. Internal inrush harmonic blocking settings.

Name	Range	Step	Default	Description
Inrush harmonic blocking (internal-only trip)	• No • Yes	-	• No	Enables and disables the 2nd harmonic blocking.

Name	Range	Step	Default	Description
2nd harmonic blocking limit (Iharm/Ifund)	0.10…50.00%I_{fund}	0.01%I_{fund}	0.01%I_{fund}	Defines the limit of the 2nd harmonic blocking.

Operating time characteristics for trip and reset

This function supports definite time delay (DT) and inverse definite minimum time delay (IDMT). For detailed information on these delay types please refer to the chapter "General properties of a protection function" and its section "Operating time characteristics".

Figure. 4.4.2 - 29. Typical operation time delays with different current to setting ratios in instant operation mode.

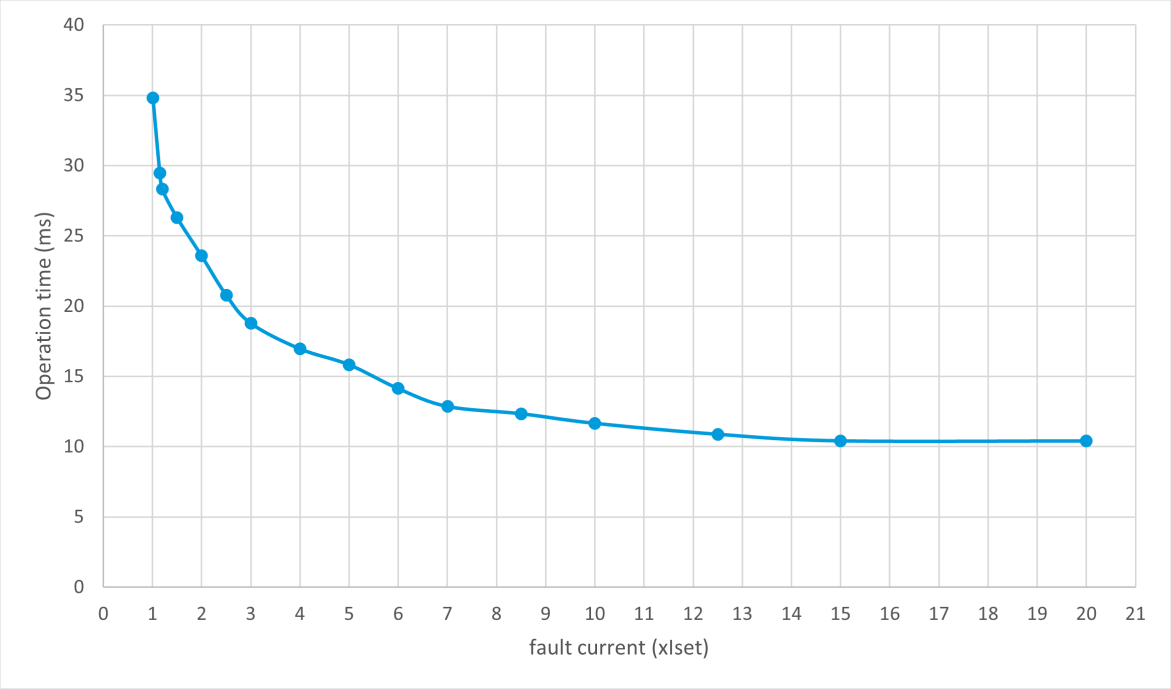

Events and registers

The non-directional overcurrent function (abbreviated "NOC" in event block names) generates events and registers from the status changes in the events listed below. The user can select which event messages are stored in the main event buffer: ON, OFF, or both. The events triggered by the function are recorded with a time stamp.

The function's output can be used for direct I/O controlling and user logic programming. The function also provides a resettable cumulative counter for the START, TRIP and BLOCKED events.

Table. 4.4.2 - 60. Event messages.

Event block name	Event names
NOC1...NOC4	Start ON/OFF
NOC1...NOC4	Trip ON/OFF
NOC1...NOC4	Block ON/OFF
NOC1...NOC4	Phase A Start ON/OFF

© Arcteq Relays Ltd
IM00021

Event block name	Event names
NOC1...NOC4	Phase B Start ON/OFF
NOC1...NOC4	Phase C Start ON/OFF
NOC1...NOC4	Phase A Trip ON/OFF
NOC1...NOC4	Phase B Trip ON/OFF
NOC1...NOC4	Phase C Trip ON/OFF

The function registers its operation into the last twelve (12) time-stamped registers; this information is available for all provided instances separately. The register of the function records the ON event process data for START, TRIP or BLOCKED. The table below presents the structure of the function's register content.

Table. 4.4.2 - 61. Register content.

Name	Description
Date and time	dd.mm.yyyy hh:mm:ss.mss
Event	Event name
Fault type	L1-E…L1-L2-L3
Pre-trigger current	Start/Trip -20ms current
Fault current	Start/Trip current
Pre-fault current	Start -200ms current
Trip time remaining	0 ms...1800s
Setting group in use	Setting group 1...8 active.

4.4.3 Non-directional earth fault protection (I0>; 50N/51N)

The non-directional earth fault function is used for instant and time-delayed earth fault protection. The number of stages in the function depend on the device model. The operating characteristics are based on the selected neutral current magnitude which the function measures constantly.

Figure. 4.4.3 - 30. Simplified function block diagram of the I0> fucntion.

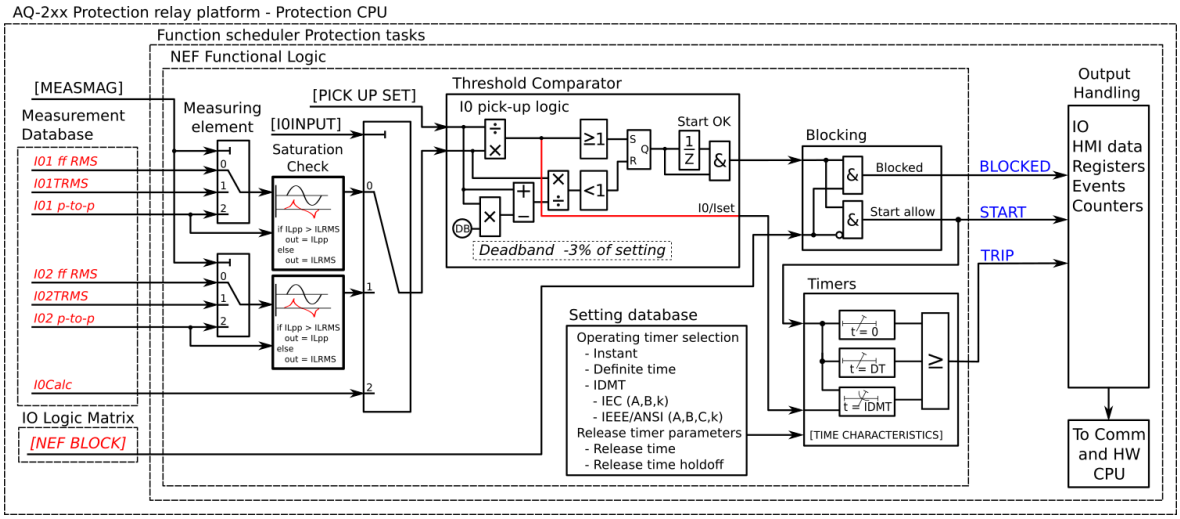

Measured input

The function block uses residual current measurement values. The available analog measurement channels are I_{01} and I_{02} (residual current measurement) and I_{0Calc} (residual current calculated from phase current). The user can select the monitored magnitude to be equal either to RMS values (fundamental frequency component), to TRMS values from the whole harmonic specter of 32 components, or to peak-to-peak values.

Table. 4.4.3 - 62. Measurement inputs of the I0> function.

Signal	Description
I_{01}RMS	Fundamental frequency component of coarse residual current measurement input I01
I_{01}TRMS	TRMS measurement of coarse residual current measurement input I01
I_{01}PP	Peak-to-peak measurement of coarse residual current measurement input I01
I_{02}RMS	Fundamental frequency component of sensitive residual current measurement input I02
I_{02}TRMS	TRMS measurement of coarse sensitive current measurement input I02
I_{02}PP	Peak-to-peak measurement of sensitive residual current measurement input I02
I_{0Calc}	Fundamental frequency component of the calculated zero sequence current calculated from the three phase currents

General settings

The following general settings define the general behavior of the function. These settings are static i.e. it is not possible to change them by editing the setting group.

© Arcteq Relays Ltd
IM00021

Table. 4.4.3 - 63. General settings of the function.

Name	Range	Default	Description
Setting control from comm bus	• Disabled • Allowed	Disabled	Activating this parameter permits changing the pick-up level of the protection stage via SCADA.
I0> LN mode	• On • Blocked • Test • Test/ Blocked • Off	On	Set mode of NEF block. This parameter is visible only when Allow setting of individual LN mode is enabled in General menu.
I0> force status to	• Normal • Start • Trip • Blocked	Normal	Force the status of the function. Visible only when *Enable stage forcing* parameter is enabled in *General* menu.
Measured magnitude	• RMS • TRMS • Peak-to-peak	RMS	Defines which available measured magnitude is used by the function. This parameter is available when "Input selection" has been set to "I01" or "I02".
Measurement side	• Side 1 • Side 2	Side 1	Defines which current measurement module is used by the function.
Input selection	• I01 • I02 • I0Calc	I01	Defines which measured residual current is used by the function.

Pick-up settings

The $I0_{set}$ setting parameter controls the the pick-up of the I0> function. This defines the maximum allowed measured current before action from the function. The function constantly calculates the ratio between the $I0_{set}$ and the measured magnitude (I_m) for each of the three phases. The reset ratio of 97 % is built into the function and is always relative to the $I0_{set}$ value. The setting value is common for all measured phases. When the I_m exceeds the $I0_{set}$ value (in single, dual or all phases) it triggers the pick-up operation of the function.

Setting group selection controls the operating characteristics of the function, i.e. the user or user-defined logic can change function parameters while the function is running.

Table. 4.4.3 - 64. Pick-up settings.

Name	Range	Step	Default	Description
$I0_{set}$	0.0001…40.00 × I_n	0.0001 × I_n	1.20 × I_n	Pick-up setting

Read-only parameters

The function's *Info* page displays useful, real-time information on the state of the protection function. It is accessed either through the device's HMI display, or through the setting tool software when it is connected to the device and its Live Edit mode is active.

Table. 4.4.3 - 65. Information displayed by the function.

Name	Range	Step	Description
I0> LN behaviour	• On • Blocked • Test • Test/Blocked • Off	-	Displays the mode of NEF block. This parameter is visible only when *Allow setting of individual LN mode* is enabled in *General* menu.
I0> condition	• Normal • Start • Trip • Blocked	-	Displays status of the protection function.
Detected I0 angle	-360.00...360.00 deg	0.01 deg	Angle of I0 against reference. If phase voltages are available, positive sequence voltage angle is used as reference. If voltages are not available, positive sequence current angle is used as reference.
Detected fault type	• - • A-G-R • B-G-F • C-G-R • A-G-F • B-G-R • C-G-F	-	Displays the detected fault type and direction of previous fault. "A/B/C" stand for one of the three phases. "G" stands for "ground". "F" stands for "forward" direction and "R" stands for "reverse" direction.
Expected operating time	-1800.000...1800.000 s	0.005 s	Displays the expected operating time when a fault occurs. When IDMT mode is used, the expected operating time depends on the measured current value. If the measured current changes during a fault, the expected operating time changes accordingly.
Time remaining to trip	0.000...1800.000 s	0.005 s	When the function has detected a fault and counts down time towards a trip, this displays how much time is left before tripping occurs.
I_{meas}/I_{set} at the moment	0.00...1250.00	0.01	The ratio between the measured current and the pick-up value.

Function blocking

The blocking signal is evaluated at the start of each program cycle. The blocking signals are connected to the function's dedicated input, which can be configured in the *IO → Blocking Input Control* tab of the function.

- When the pick-up element activates and the blocking signal is not active, a START signal is generated and the function starts or continues the trip-time countdown.
- When the pick-up element activates while the blocking signal is active, START and BLOCKED signals are generated, but no further processing is performed.
- If a START signal is already active when the blocking input signal becomes active, the release-time characteristics are processed as if the fault condition had been cleared.

The blocking signal needs to reach the device minimum of 5 ms before the set operating delay has passed in order for the blocking to activate in time.

© Arcteq Relays Ltd
IM00021

The function also offers an optional internal inrush harmonic blocking feature. If the inrush harmonic pick-up is active at the same time as the protection function pick-up element, the trip delay timer continues counting down as normal. Once the countdown reaches zero, if the pick-up element remains active and the second harmonic value has dropped, the function issues a trip.

Table. 4.4.3 - 66. Internal inrush harmonic blocking settings.

Name	Range	Step	Default	Description
Inrush harmonic blocking (internal-only trip)	• No • Yes	-	• No	Enables and disables the 2nd harmonic blocking.
2nd harmonic blocking limit (Iharm/Ifund)	0.10…50.00%I_{fund}	0.01%I_{fund}	0.01%I_{fund}	Defines the limit of the 2nd harmonic blocking.

Operating time characteristics for trip and reset

This function supports definite time delay (DT) and inverse definite minimum time delay (IDMT). For detailed information on these delay types please refer to the chapter "General properties of a protection function" and its section "Operating time characteristics".

Events and registers

The non-directional earth fault function (abbreviated "NEF" in event block names) generates events and registers from the status changes in the events listed below. The user can select which event messages are stored in the main event buffer: ON, OFF, or both. The events triggered by the function are recorded with a time stamp.

The function's outputs can be used for direct I/O controlling and user logic programming. The function also provides a resettable cumulative counter for the START, TRIP and BLOCKED events.

The function offers four (4) independent stages; the events are segregated for each stage operation.

Table. 4.4.3 - 67. Event messages.

Event block name	Event names
NEF1...NEF4	Start ON/OFF
NEF1...NEF4	Trip ON/OFF
NEF1...NEF4	Block ON/OFF

The function registers its operation into the last twelve (12) time-stamped registers. The register of the function records the ON event process data for START, TRIP or BLOCKED. The table below presents the structure of the function's register content.

Table. 4.4.3 - 68. Register content.

Name	Description
Date and time	dd.mm.yyyy hh:mm:ss.mss
Event	Event name
Fault type	A-G-R…C-G-F

Name	Description
Pre-trigger current	Start/Trip -20ms current
Fault current	Start/Trip current
Pre-fault current	Start -200ms current
Trip time remaining	0 ms...1800s
Setting group in use	Setting group 1...8 active.

4.4.4 Directional overcurrent protection (Idir>; 67)

The directional overcurrent function is used for instant and time-delayed overcurrent and short-circuits. A device with both voltage and current protection modules can have four (4) available stages of the function (Idir>, Idir>>, Idir>>>, Idir>>>>). The operating decisions are based on phase current magnitudes which the function constantly measures.

Figure. 4.4.4 - 31. Simplified function block diagram of the Idir> function.

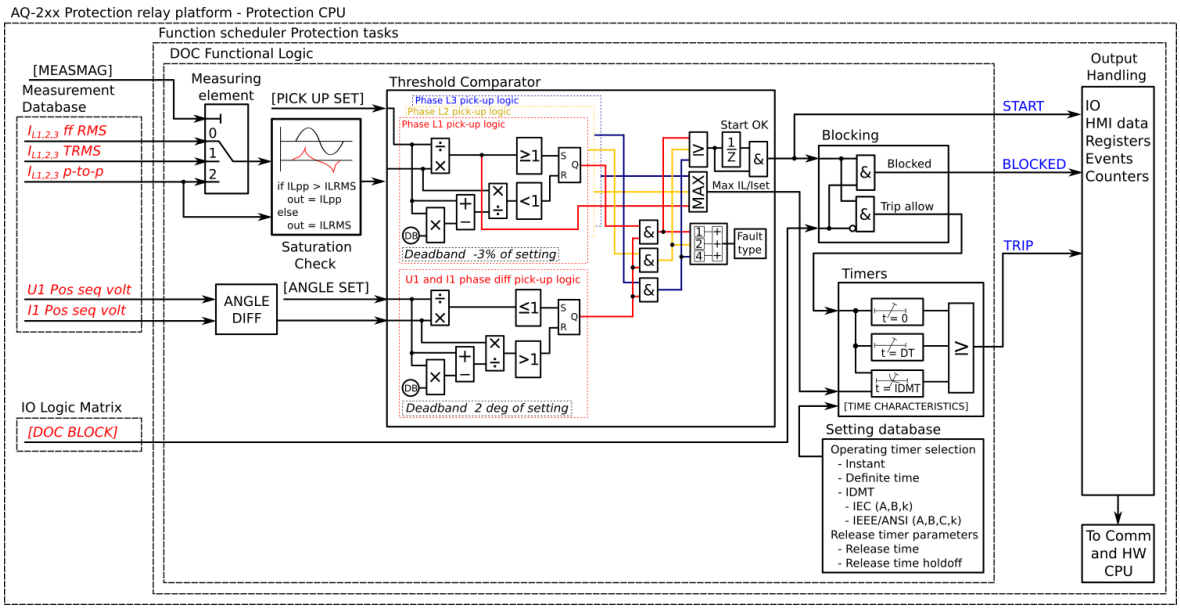

Measured input

The function block uses phase current and voltage measurement values. The user can select the monitored current magnitude to be equal either to RMS values (fundamental frequency component), to TRMS values from the whole harmonic specter of 32 components, or to peak-to-peak values.

The fault current angle is based on the comparison between the positive sequence voltage U_1 and the positive sequence current I_1. If the positive sequence voltage is not available (three line-to-line voltages but no U_0), the voltage angle is based on a faulty phase line-to-line voltage. If the voltage drops below 1 V in the secondary side during a fault, the voltage memory is used for 0.5 seconds. After that the reference angle of voltage is forced to 0°.

© Arcteq Relays Ltd
IM00021

Table. 4.4.4 - 69. Measurement inputs of the Idir> function.

Signal	Description
I_{L1}RMS	Fundamental frequency component of phase L1 (A) current measurement
I_{L2}RMS	Fundamental frequency component of phase L2 (B) current measurement
I_{L3}RMS	Fundamental frequency component of phase L3 (C) current measurement
I_{L1}TRMS	TRMS measurement of phase L1 (A) current
I_{L2}TRMS	TRMS measurement of phase L2 (B) current
I_{L3}TRMS	TRMS measurement of phase L3 (C) current
I_{L1}PP	Peak-to-peak measurement of phase L1 (A) current
I_{L2}PP	Peak-to-peak measurement of phase L2 (B) current
I_{L3}PP	Peak-to-peak measurement of phase L3 (C) current
U_1RMS	Fundamental frequency component of U_1/V voltage measurement
U_2RMS	Fundamental frequency component of U_2/V voltage measurement
U_3RMS	Fundamental frequency component of U_3/V voltage measurement
U_4RMS	Fundamental frequency component of U_4/V voltage measurement

General settings

The following general settings define the general behavior of the function. These settings are static i.e. it is not possible to change them by editing the setting group.

Table. 4.4.4 - 70. General settings of the function.

Name	Range	Default	Description
Idir> LN mode	• On • Blocked • Test • Test/ Blocked • Off	On	Set mode of DOC block. This parameter is visible only when *Allow setting of individual LN mode* is enabled in *General* menu.
Idir> force status to	• Normal • Start • Trip • Blocked	Normal	Force the status of the function. Visible only when *Enable stage forcing* parameter is enabled in *General* menu.
Measured magnitude	• RMS • TRMS • Peak-to-peak	RMS	Defines which available measured magnitude is used by the function.
Measurement side	• Side 1 • Side 2	Side 1	Defines which current measurement module is used by the function. Visible if the unit has more than one current measurement module.

Pick-up settings

The I_{set} setting parameter controls the pick-up of the I> function. This defines the maximum allowed measured current before action from the function. The function constantly calculates the ratio between the I_{set} and the measured magnitude (I_m) for each of the three phases. The reset ratio of 97 % is built into the function and is always relative to the I_{set} value. The setting value is common for all measured phases, and when the I_m exceeds the I_{set} value (in single, dual or all phases) it triggers the pick-up operation of the function.

The trip characteristic can be set to directional or non-directional. In the non-directional mode only the pick-up value of the positive sequence current magnitude must be fulfilled in order for the function to trip. In the directional mode the fault must also be in the monitored direction to fulfill the terms to trip. By default, the tripping area is ±88° (176°). The reference angle is based on the calculated positive sequence voltage U_1 angle. If the U_1voltage is not available and only line-to-line voltages are measured, the reference angle is based on a healthy line-to-line voltage. During a short-circuit the reference angle is based on impedance calculation.

If the voltage drops below 1 V in the secondary side, the angle memory is used for 0.5 seconds. The angle memory forces the reference angle to be equal to the value measured or calculated before the fault. The angle memory captures the measured voltage angle 100 ms before the fault starts. After 0.5 seconds the angle memory is no longer used, and the reference angle is forced to 0°. The inbuilt reset ratio for the tripping area angle is 2°.

Setting group selection controls the operating characteristics of the function, i.e. the user or user-defined logic can change function parameters while the function is running.

Table. 4.4.4 - 71. Pick-up settings.

Name	Range	Step	Default	Description
Characteristic direction	• Directional • Non-directional	-	Directional	Switches between directional and non-directional overcurrent mode.
Operating sector size (+ / -)	±1.0…170.0°	0.1°	±88°	Pick-up area size in degrees.
Operating sector center	-180.0…180.0°	0.1°	0°	Turns the operating sector
Pick-up setting I_{set}	0.10…40.00×I_n	0.01×I_n	1.20×I_n	Pick-up setting

© Arcteq Relays Ltd
IM00021

Figure. 4.4.4 - 32. Angle tracking of the Idir> function (3LN/3LL + U_0 mode).

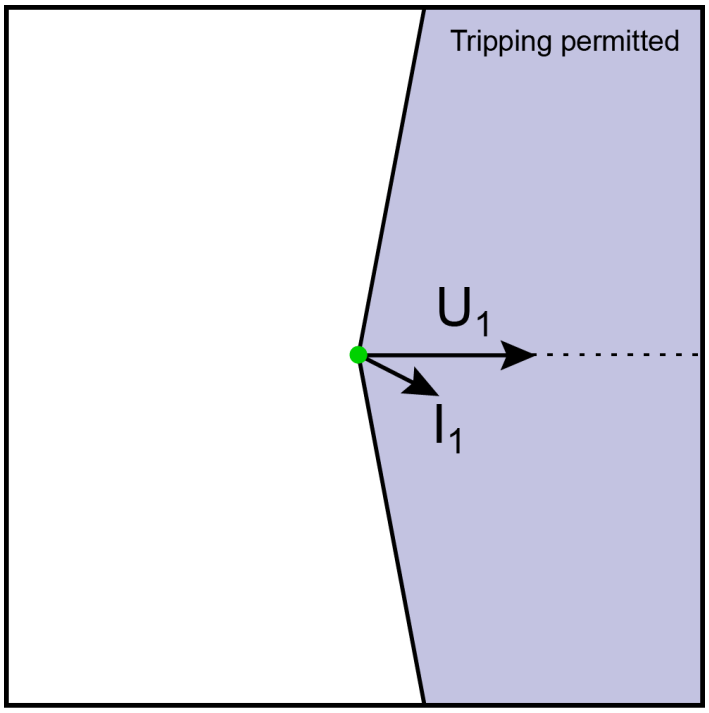

Please note in the picture above that the tripping area is linked to the angle of the positive sequence voltage U_1. The angle of the positive sequence current I_1 is compared to U_1 angle, and if the fault is in the correct direction, it is possible to perform a trip when the amplitude of I_{L1}, I_{L2} or I_{L3} increases above the pick-up limit.

If the 3LL mode is used without the U_0 measurement in a single-phase fault situation, the voltage reference comes from the healthy phase and the current reference from the faulty phase. In a short-circuit the angle comes from impedance calculation.

Figure. 4.4.4 - 33. Operation sector area when the sector center has been set to -45 degrees.

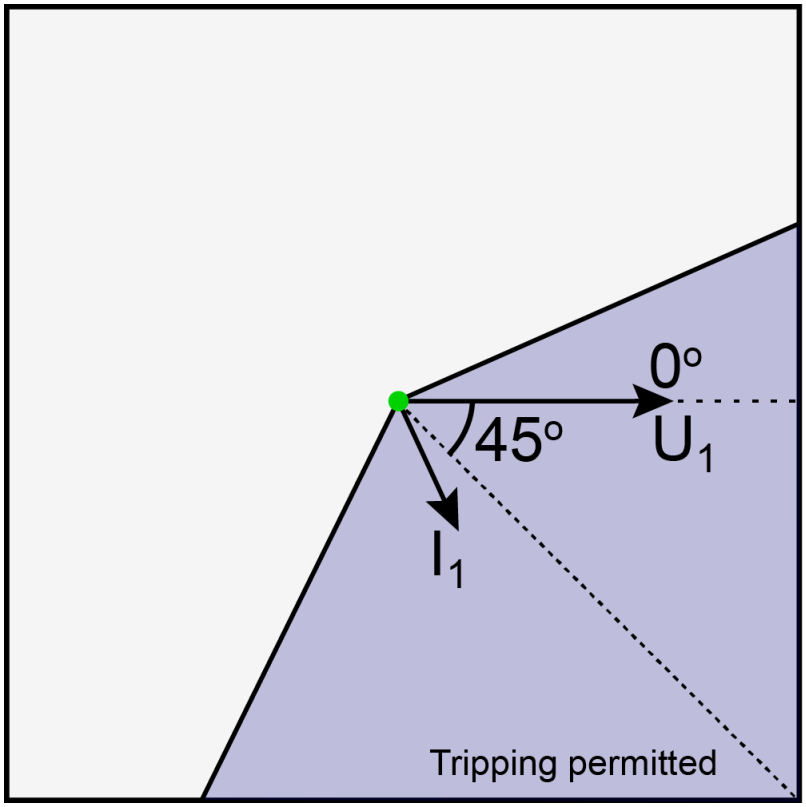

Figure. 4.4.4 - 34. When Idir> function has been set to "Non-directional" the function works basically just like a traditional non-directional overcurrent protection function.

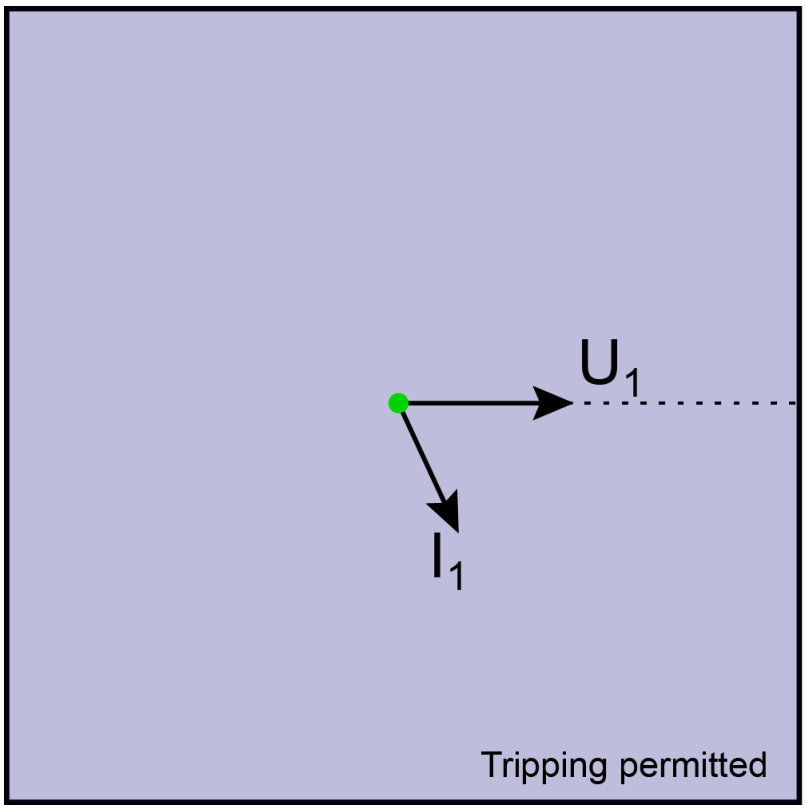

© Arcteq Relays Ltd
IM00021

Read-only parameters

The function's *Info* page displays useful, real-time information on the state of the protection function. It is accessed either through the device's HMI display, or through the setting tool software when it is connected to the device and its Live Edit mode is active.

Table. 4.4.4 - 72. Information displayed by the function.

Name	Range	Step	Description
Idir> LN behaviour	• On • Blocked • Test • Test/Blocked • Off	-	Displays the mode of DOC block. This parameter is visible only when *Allow setting of individual LN mode* is enabled in *General* menu.
Operating angle now	-360.00...360.00deg	0.01deg	The positive sequence current angle in relation to the positive sequence voltage.
Expected operating time	0.000...1800.00s	0.005s	Displays the expected operating time when a fault occurs. When IDMT mode is used, the expected operating time depends on the highest measured phase current value. If the measured current changes during a fault, the expected operating time changes accordingly.
Time remaining to trip	-1800.000...1800.00s	0.005s	When the function has detected a fault and counts down time towards a trip, this displays how much time is left before tripping occurs.
I_{meas}/I_{set} at the moment	0.00...1250.00I_m/I_{set}	0.01I_m/I_{set}	The ratio between the highest measured phase current and the pick-up value.

Function blocking

The blocking signal is evaluated at the start of each program cycle. The blocking signals are connected to the function's dedicated input, which can be configured in the *IO → Blocking Input Control* tab of the function.

- When the pick-up element activates and the blocking signal is not active, a START signal is generated and the function starts or continues the trip-time countdown.
- When the pick-up element activates while the blocking signal is active, START and BLOCKED signals are generated, but no further processing is performed.
- If a START signal is already active when the blocking input signal becomes active, the release-time characteristics are processed as if the fault condition had been cleared.

The blocking signal needs to reach the device minimum of 5 ms before the set operating delay has passed in order for the blocking to activate in time.

The function also offers an optional internal inrush harmonic blocking feature. If the inrush harmonic pick-up is active at the same time as the protection function pick-up element, the trip delay timer continues counting down as normal. Once the countdown reaches zero, if the pick-up element remains active and the second harmonic value has dropped, the function issues a trip.

Table. 4.4.4 - 73. Internal inrush harmonic blocking settings.

Name	Range	Step	Default	Description
Inrush harmonic blocking (internal-only trip)	• No • Yes	-	• No	Enables and disables the 2nd harmonic blocking.
2nd harmonic blocking limit (Iharm/Ifund)	0.10…50.00%I_{fund}	0.01%I_{fund}	0.01%I_{fund}	Defines the limit of the 2nd harmonic blocking.

Operating time characteristics for trip and reset

This function supports definite time delay (DT) and inverse definite minimum time delay (IDMT). For detailed information on these delay types please refer to the chapter "General properties of a protection function" and its section "Operating time characteristics".

Events and registers

The directional overcurrent function (abbreviated "DOC" in event block names) generates events and registers from the status changes in the events listed below. The user can select which event messages are stored in the main event buffer: ON, OFF, or both. The events triggered by the function are recorded with a time stamp.

The function's outputs can be used for direct I/O controlling and user logic programming. The function also provides a resettable cumulative counter for the START, TRIP and BLOCKED events.

The function offers four (4) independent stages; the events are segregated for each stage operation.

Table. 4.4.4 - 74. Event messages.

Event block name	Event names
DOC1...DOC4	Start ON/OFF
DOC1...DOC4	Trip ON/OFF
DOC1...DOC4	Block ON/OFF
DOC1...DOC4	No voltage, Blocking ON/OFF
DOC1...DOC4	Measuring live angle ON/OFF
DOC1...DOC4	Using voltmem ON/OFF

The function registers its operation into the last twelve (12) time-stamped registers; this information is available for all provided instances separately. The register of the function records the ON event process data for START, TRIP or BLOCKED. The table below presents the structure of the function's register content.

Table. 4.4.4 - 75. Register content.

Register name	Description
Date and time	dd.mm.yyyy hh:mm:ss.mss
Event	Event name

© Arcteq Relays Ltd
IM00021

Register name	Description
Fault type	L1-E...L1-L2-L3
Pre-trigger current	Start/Trip -20ms current
Fault current	Start/Trip current
Pre-fault current	Start -200ms averages
Trip time remaining	0s...1800s
Setting group in use	Setting group 1...8 active
Operating angle	0...250°

4.4.5 Directional earth fault protection (I0dir>; 67N/32N)

The directional earth fault function is used for instant and time-delayed earth fault protection. A device with both voltage and current protection modules can have four (4) stages in the function (I0dir>, I0dir>>, I0dir>>>, I0dir>>>>). The operating decisions are based on selected neutral current and voltage magnitudes which the function constantly measures.

Figure. 4.4.5 - 35. Simplified function block diagram of the I0dir> function.

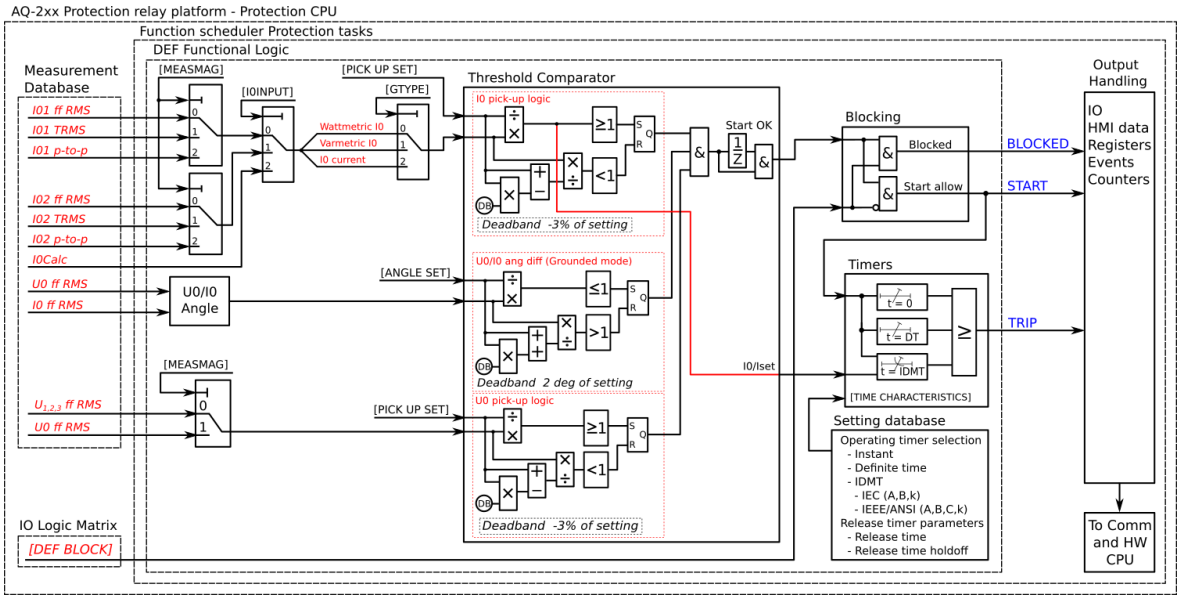

Measured input

The function block uses residual current measurement values and neutral voltage measurement values. The available residual current measurement channels are I_{01} and I_{02} (residual current measurement) and I0Calc (residual current calculated from phase current).The user can select the monitored current magnitude to be equal either to RMS values (fundamental frequency component), to TRMS values from the whole harmonic specter of 32 components, or to peak-to-peak values.

The fault current angle is based on comparing the neutral voltage U_0 angle to the residual current I_0 angle. Both I_0 and U_0 must be above the squelch limit to be able to detect the angle. The squelch limit for the I_0 current is 0.01 x I_n and for the U_0 voltage 0.01 x U_n.

Table. 4.4.5 - 76. Measurement inputs of the I0dir> function.

Signal	Description
I_{01}RMS	Fundamental frequency component of coarse residual current measurement input I01
I_{01}TRMS	TRMS measurement of coarse residual current measurement input I01
I_{01}PP	Peak-to-peak measurement of coarse residual current measurement input I01
I_{02}RMS	Fundamental frequency component of sensitive residual current measurement input I02
I_{02}TRMS	TRMS measurement of coarse sensitive current measurement input I02
I_{02}PP	Peak-to-peak measurement of sensitive residual current measurement input I02
I_{0Calc}	Fundamental frequency component of residual current calculated from the three phase currents
U_0RMS	Fundamental frequency component of zero sequence voltage measurement input U0
U_{0Calc}	Fundamental frequency component of of the zero sequence voltage calculated from the three phase voltages

General settings

The following general settings define the general behavior of the function. These settings are static i.e. it is not possible to change them by editing the setting group.

Table. 4.4.5 - 77. General settings of the function.

Name	Range	Default	Description
I0dir> LN mode	On Blocked Test Test/Blocked Off	On	Set mode of DEF block. This parameter is visible only when *Allow setting of individual LN mode* is enabled in *General* menu.
I0dir> force status to	• Normal • Start • Trip • Blocked • Unearthed Start • Unearthed Trip • Compensated Start • Compensated Trip	Normal	Force the status of the function. Visible only when *Enable stage forcing* parameter is enabled in *General* menu.
U0 directional reference	• U0 • -U0	U0	If the connected neutral voltage polarity is opposite to the connected residual current, this parameter can swap the angle reference.
U0> Meas input select	• Select • U0 Calculated • U3 Input • U4 Input	Select	Defines which available neutral voltage measurement is used. Available neutral voltages depend on measurement settings (*Measurements → Transformers → VT module*).

© Arcteq Relays Ltd
IM00021

Name	Range	Default	Description
Measured magnitude	• RMS • TRMS • Peak-to-peak	RMS	Defines which available measured magnitude is used by the function. This parameter is available when "Input selection" has been set to "I01" or "I02".
Measurement side	• Side 1 • Side 2	Side 1	Defines which current measurement module is used by the function.
Input selection	• I01 • I02 • I0Calc	I01	Defines which measured residual current is used by the function.

Pick-up settings

The the pick-up of the I0dir> function is controlled by the $I0_{set}$ setting parameter and the $U0_{set}$ setting parameter. The former defines the maximum allowed measured current, while the latter defines the maximum allowed measured voltage and checks the angle difference before action from the function. The function constantly calculates the ratio between the $I0_{set}$ and the $U0_{set}$ and the measured magnitudes ($I_m$and U_m). The reset ratio of 97 % is built into the function and is always relative to the $I0_{set}$ (or $U0_{set}$) value. When the I_m exceeds the $I0_{set}$ value it triggers the pick-up operation of the function.

Setting group selection controls the operating characteristics of the function, i.e. the user or user-defined logic can change function parameters while the function is running.

Table. 4.4.5 - 78. Pick-up settings.

Name	Range	Step	Default	Description
Grounding type	• Unearthed [32N Var] • Petersen coil GND [32N Watt] • Grounded [67N] • $I0_{Cos}$ & $I0_{Sin}$ broad range with MCD [32N Var/ Watt]	-	Unearthed	Network grounding method
Pick-up setting $I0_{set}$>	0.005…40.00×I_n	0.001×I_n	1.20×I_n	Current pick-up setting. If broadrange mode is selected, unearthed and compensated networks have separate pick-up settings.
Comp. pick-up setting $I0_{set}$ (I0Cosfi)>				
Unearth. pick-up setting $I0_{set}$ (I0Sinfi)>				
Pick-up setting $U0_{set}$>	1…75%U_n	0.01%U_n	20%U_n	Voltage pick-up setting. If broadrange mode is selected, unearthed and compensated networks have separate pick-up settings.

Name	Range	Step	Default	Description
Comp. pick-up setting $U0_{set}$ (I0Cosfi)>				
Unearth. pick-up setting $U0_{set}$ (I0Sinfi)>				
Multi-criteria detection	• Not used • Used	-	Not used	Activation of detecting healthy or unhealthy feeder by analyzing symmetrical components of currents and voltages. Visible when broadrange mode is used.
Unearthed/ Compensated border angle	-45.0…90°	0.1°	45°	Dividing the angle between unearthed and compensated tripping (see description later in this document). Visible when earthing type is set to $I0_{Cos}$ & $I0_{Sin}$ broad range mode.
Resistive (I0Cosfi) mode I0 angle blinder.	-90.0…0.0°	0.1°	-90°	I0 angle blinder. Used in broadrange and Petersen coil grounded mode. Not in use when set to zero.
Tripping area size (+ / -)	±45.0…135.0°	0.1°	±88°	Defines the tripping area sector size in grounded network mode.
Tripping area center	-360.00…360.00	0.1°	0.0°	Turns the tripping area in grounded network mode.

© Arcteq Relays Ltd
IM00021

Unearthed network

Figure. 4.4.5 - 36. Angle tracking of I0dir> function (unearthed network model) (32N)

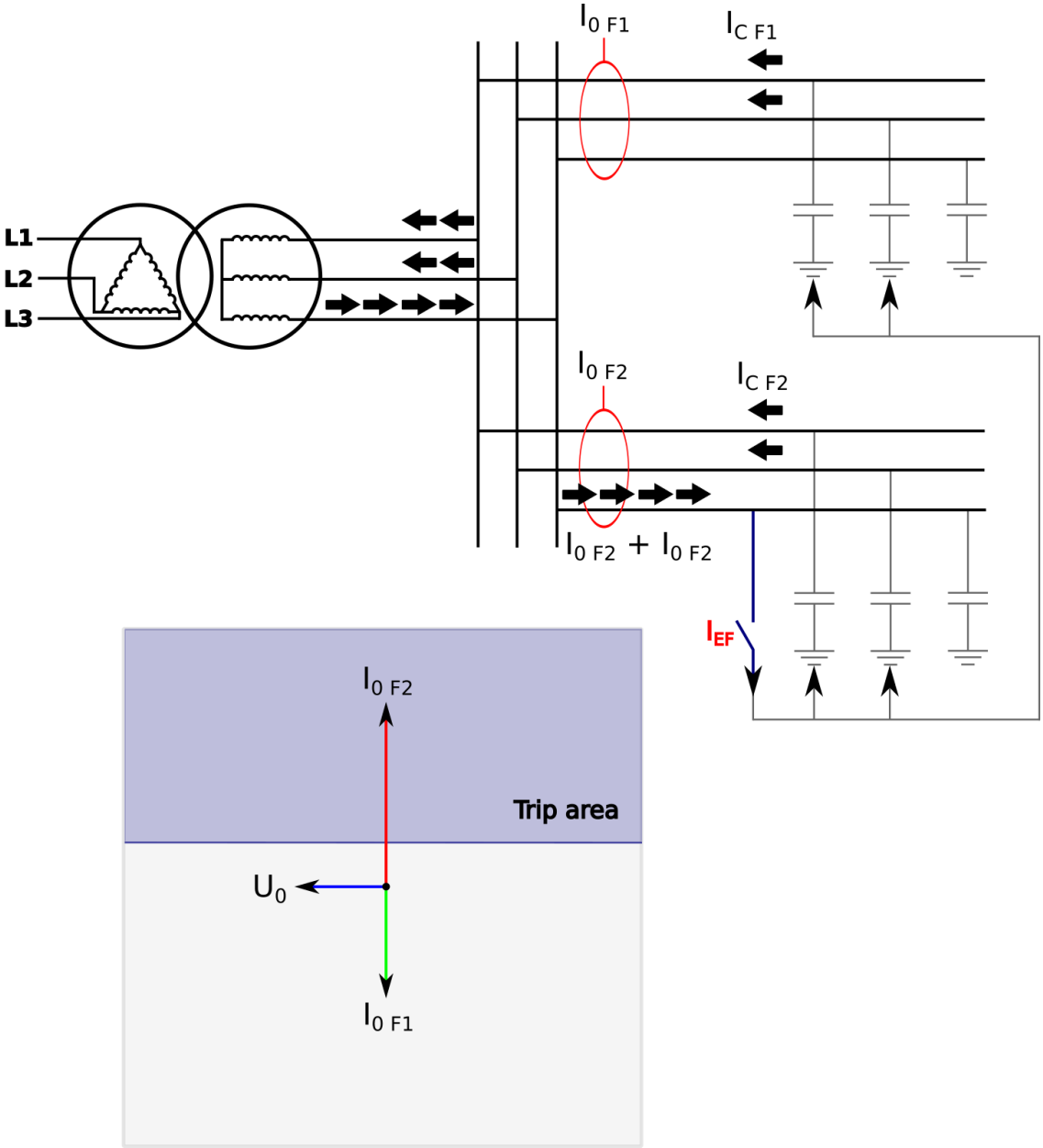

When the unearthed (capacitive) network mode is chosen, the function expects the fault current to be lagging zero sequence voltage by 90 degrees. Healthy phases of healthy feeders produce capacitive current during earth fault just like a faulty feeder but the current is floating towards the busbar and through an incoming feeder transformer or a earthing transformer and into a faulty feeder. Healthy feeders do not trip since capacitive current is floating to the opposite direction and selective tripping can be ensured.

The amplitude of the fault current depends on the capacitance of the network. The outgoing feeders are the sources for capacitive currents. The bigger the network the greater the capacitive current during a fault. Each outgoing feeder produces capacitance according to the zero sequence capacitive reactance of the line (ohms per kilometer). It is normal that in cable networks fault currents are higher than in overhead lines.

The resistance of the fault affects the size of the voltage drop during a fault. In direct earth fault the zero sequence voltage amplitude is equal to the system's line-to-earth voltage. In direct earth fault the voltage of a faulty phase drops close to zero and healthy phase voltages increase to the amplitude of line-to-line voltages.

Petersen coil earthed (Compensated) network (32N)

There are many benefits to a Petersen coil earthed network. The amount of automatic reclosing is highly decreased and the maintenance of the breakers is therefore diminished. Arc faults die on their own, and cables and equipment suffer less damage. In emergency situations a line with an earth fault can be used for a specific time.

Figure. 4.4.5 - 37. Angle tracking of I0dir> function (Petersen coil earthed network model).

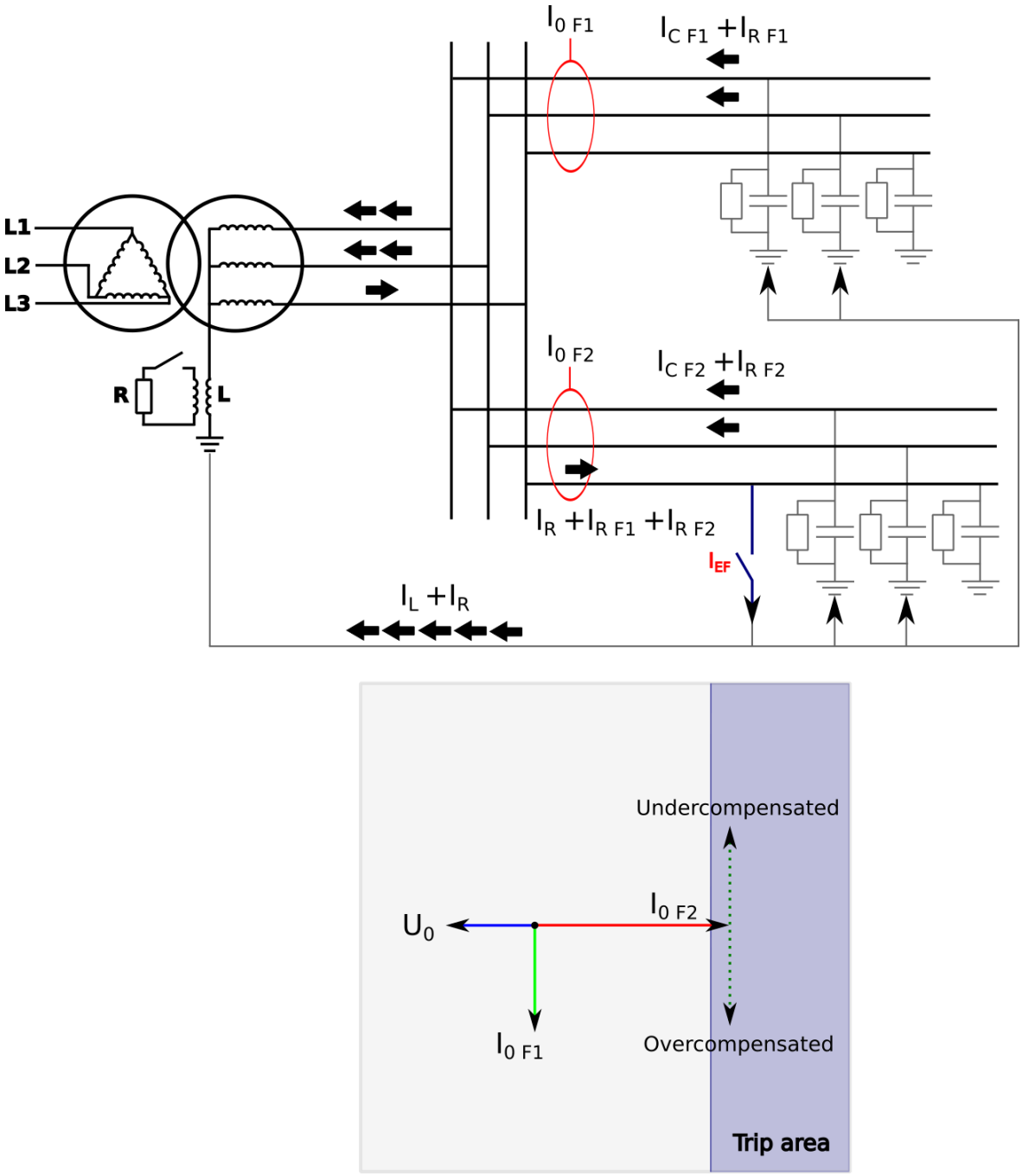

© Arcteq Relays Ltd
IM00021

When the Petersen coil earthed (compensated) network mode is chosen, the function expects the fault current to be in the opposite direction to the zero sequence voltage. Healthy phases of both healthy and faulty feeders produce a capacitive current similar to the unearthed network. The inductance of the Petersen coil compensates the capacitive current and therefore the residual current in a fault location is close to zero. The size of the inductance is chosen according to the prospective earth fault current of the network. The desired compensation grade is achieved when the K factor is close to 1.0 and the network is fully compensated. The network is overcompensated when the K factor is greater than 1.0, and undercompensated when the K factor is smaller than 1.0.

The inductance connected to the star point of an incoming feeder transformer or -as in most cases- to a earthing transformer compensates the capacitance of the network; however, this prevents the capacitive fault current to be measured. The fault detection is handled by connecting the resistance in parallel with the inductance. This resistance includes the amplitude of the fault current. In undercompensated or overcompensated situations the resistive component does not change during the fault; therefore, selective tripping is ensured even when the network is slightly undercompensated or overcompensated.

Directly earthed or small impedance network (67N)

Figure. 4.4.5 - 38. Angle tracking of I0dir> function (directly earthed or small impedance network).

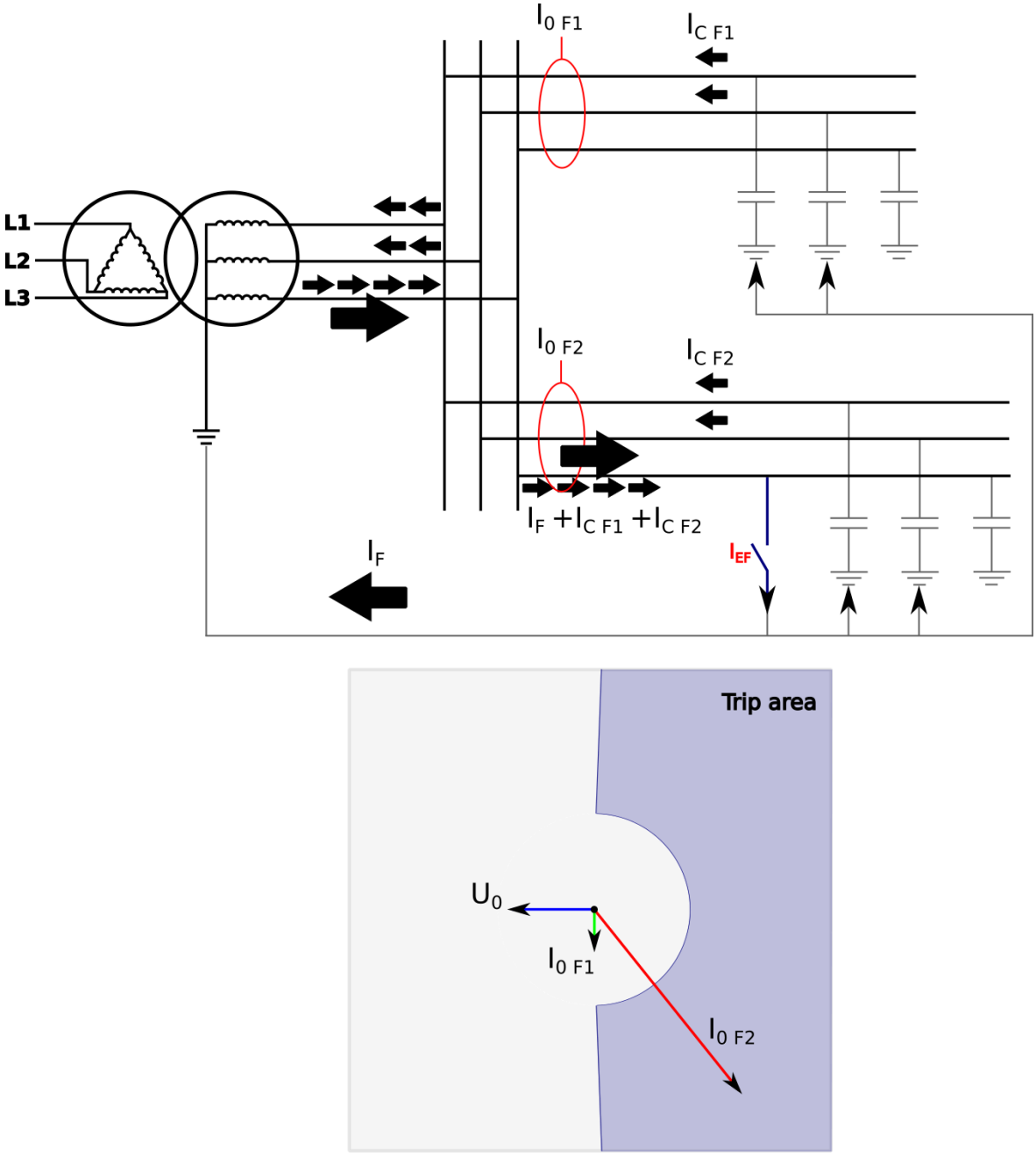

In a directly earthed network the amplitude of a single-phase fault current is similar to the amplitude of a short-circuit current. Directly earthed or small impedance network schemes are normal in transmission, distribution and industry.

The phase angle setting of the tripping area is adjustable as is the base direction of the area (angle offset).

© Arcteq Relays Ltd
IM00021

Broad range mode with multi-criteria detection for unearthed and compensated networks

When detecting earth faults in compensated long-distance cables and overhead lines, it is in some cases difficult to distinguish between a healthy and a faulty feeder. Merely measuring the angle and the magnitude of residual voltage and currents is not always enough, as changes in symmetrical components of phase currents and voltages are also needed. Additionally, when protecting feeders from earth faults, two modes are used depending on the network status (unearthed or compensated). When changing between these two statuses the setting group must be changed, and especially with distributed compensation the change may be difficult or impossible to arrange. Finally, in a compensated network protection relays with traditional algorithms may sporadically detect an earth fault in a long healthy feeder due to CT errors. For all these reasons, Arcteq has developed an improved alternative to these traditional directional earth fault protections.

Figure. 4.4.5 - 39. Angle tracking of the I0dir> function (broad range mode).

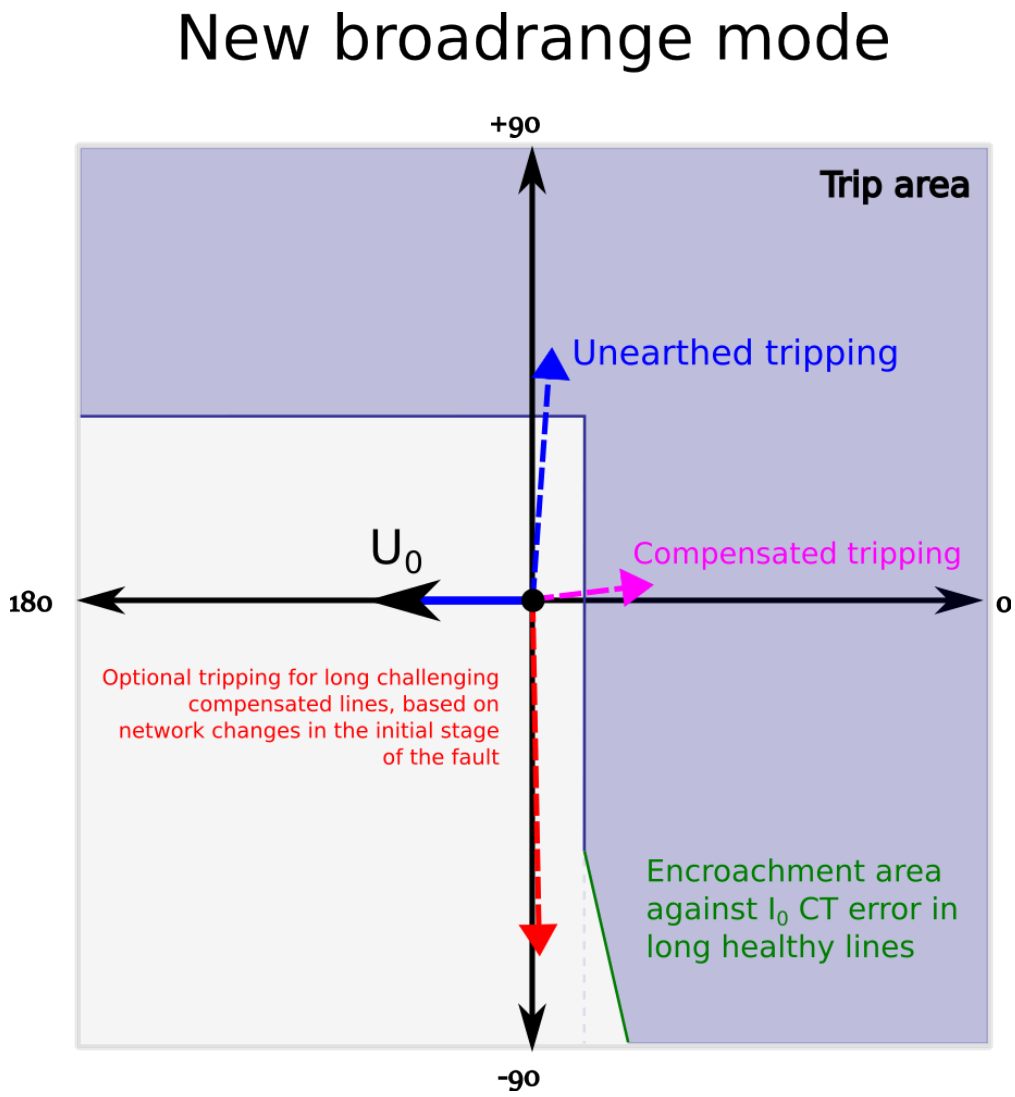

The new broad range mode is capable of detecting an earth fault directionally in both unearthed and compensated networks not only by combining the two stages together but by using a new multi-criteria detection. This optional additional tripping condition for compensated networks uses Arcteq's patented, high-resolution intermittent earth fault algorithm with added symmetrical component calculation of phase currents and voltages. If this mode is activated, the alarming criteria is comprised of a measured residual current in the fourth quadrant and the symmetrical components of voltages and currents detecting a fault. No extra parameterization is required compared to the traditional method. The multi-criteria algorithm can be tested with COMTRADE files supplied by Arcteq. The function requires a connection of three-phase currents, residual current and residual voltage to operate correctly.

To avoid unnecessary alarms the user can add an encroachment area against I0 CT errors in compensated long healthy lines.

Figure. 4.4.5 - 40. Effect of angle divider when in use and when disabled.

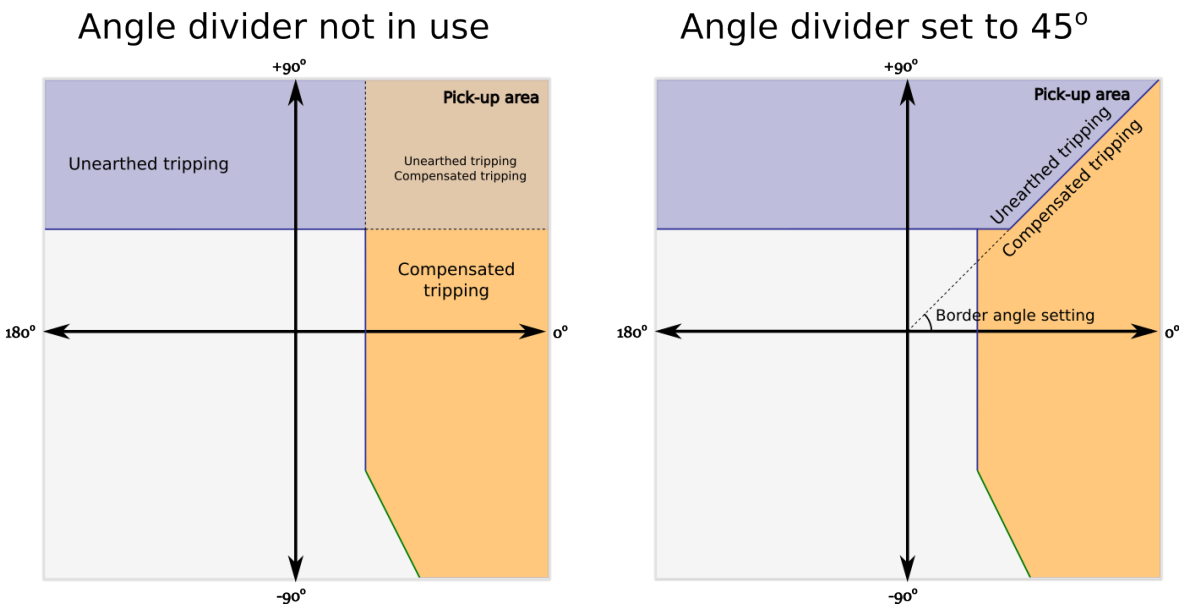

To receive a more accurate indication as to whether the fault was in a compensated or an unearthed network the angle divider can divide the area which would otherwise be overlapped between the two network models. By default the setting is 45 degrees. When the divider is disabled the angle is set to zero degrees.

Read-only parameters

The function's *Info* page displays useful, real-time information on the state of the protection function. It is accessed either through the device's HMI display, or through the setting tool software when it is connected to the device and its Live Edit mode is active.

Table. 4.4.5 - 79. Information displayed by the function.

Name	Range	Step	Description
I0dir> LN behaviour	• On • Blocked • Test • Test/Blocked • Off	On	Set mode of NOC block. This parameter is visible only when *Allow setting of individual LN mode* is enabled in *General* menu.

© Arcteq Relays Ltd
IM00021

Name	Range	Step	Description
I0dir> condition	• Normal • Start • Trip • Blocked	-	Displays the status of the protection function.
U0> Measuring now	• No U0 avail! • U0Calc • U3 Input • U4 Input	-	Displays which voltage channel is used by the function. If no voltage channel has been selected the function defaults to calculated residual voltage if line-to-neutral voltages have been connected to device. If no channel is set to "U0" mode and line-to-line voltages are connected, no residual voltage is available and "No U0 avail!" will be displayed.
U0> Pick-up setting	0.0...1 000 000V	0.1V	The required residual voltage on the primary side for the function to trip.
Detected U0/ I0 angle (fi)	-360.00...360.00deg	0.01deg	The angle in degrees between the monitored residual voltage and the current.
I0 Magnitude	0.000...250.000×$I0_n$	0.001×$I0_n$	The per-unit-value of the monitored residual current.
I0 Wattmetric I0xCos(fi)	-250.000...250.000×$I0_n$	0.001×$I0_n$	The wattmetric per-unit-value of the monitored residual current.
I0 Varmetric I0xSin(fi)	-250.000...250.000×$I0_n$	0.001×$I0_n$	The varmetric per-unit-value of the monitored residual current.
I0 direction now	• Undefined • Forward • Reverse	-	The detected direction of the residual current.
I0 meas/ I0 set now	-250.000...250.000×$I0_n$	0.001×$I0_n$	The ratio between the monitored residual current and the pick-up value.
U0 measurement now	0.000...500.000%$U0_n$	0.001%$U0_n$	The measured voltage in the chosen voltage channel.
Expected operating time	0.000...1800.000s	0.005s	Displays the expected operating time when a fault occurs. When IDMT mode is used, the expected operating time depends on the measured current value. If the measured current changes during a fault, the expected operating time changes accordingly.
Time remaining to trip	-1800.000...1800.000s	0.005s	When the function has detected a fault and counts down time towards a trip, this displays how much time is left before tripping occurs.

Function blocking

The blocking signal is evaluated at the start of each program cycle. The blocking signals are connected to the function's dedicated input, which can be configured in the *IO → Blocking Input Control* tab of the function.

- When the pick-up element activates and the blocking signal is not active, a START signal is generated and the function starts or continues the trip-time countdown.
- When the pick-up element activates while the blocking signal is active, START and BLOCKED signals are generated, but no further processing is performed.

- If a START signal is already active when the blocking input signal becomes active, the release-time characteristics are processed as if the fault condition had been cleared.

The blocking signal needs to reach the device minimum of 5 ms before the set operating delay has passed in order for the blocking to activate in time.

The function also offers an optional internal inrush harmonic blocking feature. If the inrush harmonic pick-up is active at the same time as the protection function pick-up element, the trip delay timer continues counting down as normal. Once the countdown reaches zero, if the pick-up element remains active and the second harmonic value has dropped, the function issues a trip.

Table. 4.4.5 - 80. Internal inrush harmonic blocking settings.

Name	Range	Step	Default	Description
Inrush harmonic blocking (internal-only trip)	• No • Yes	-	• No	Enables and disables the 2nd harmonic blocking.
2nd harmonic blocking limit (Iharm/Ifund)	0.10…50.00%I_{fund}	0.01%I_{fund}	0.01%I_{fund}	Defines the limit of the 2nd harmonic blocking.

Operating time characteristics for trip and reset

This function supports definite time delay (DT) and inverse definite minimum time delay (IDMT). For detailed information on these delay types please refer to the chapter "General properties of a protection function" and its section "Operating time characteristics".

NOTICE!
IDMT settings are not available in broadrange mode.

Table. 4.4.5 - 81. Time delay settings specific to the directional earth fault function.

Name	Range	Step	Default	Description
Delay type of broad range characteristics	• Common time • Separate time for I0Cosfi and I0Sinfi	-	Common time	If broadrange mode is selected, it is possible to set separate time delay for earth faults in grounded networks and Petersen coil compensated networks.
Definite operating time delay (Compensated)	0.000…1800.000 s	0.005 s	0.040 s	Time delays for compensated and unearthed earth faults when "Delay type of broad range characteristics" has been set to "Separate".
Definite operating time delay (Unearthed)				

© Arcteq Relays Ltd
IM00021

Events and registers

The directional overcurrent function (abbreviated "DEF" in event block names) generates events and registers from the status changes in the events listed below. The user can select which event messages are stored in the main event buffer: ON, OFF, or both. The events triggered by the function are recorded with a time stamp.

The function's outputs can be used for direct I/O controlling and user logic programming. The function also provides a cumulative counter for the START, TRIP and BLOCKED events.

The function offers four (4) independent stages; the events are segregated for each stage operation.

Table. 4.4.5 - 82. Event messages.

Event block name	Event name
DEF1...DEF4	Start ON/OFF
DEF1...DEF4	Trip ON/OFF
DEF1...DEF4	Block ON/OFF
DEF1...DEF4	I0Cosfi Start ON/OFF
DEF1...DEF4	I0Sinfi Start ON/OFF
DEF1...DEF4	I0Cosfi Trip ON/OFF
DEF1...DEF4	I0Sinfi Trip ON/OFF

The function registers its operation into the last twelve (12) time-stamped registers; this information is available for all provided instances separately. The register of the function records the ON event process data for START, TRIP or BLOCKED. The table below presents the structure of the function's register content.

Table. 4.4.5 - 83. Register content.

Register	Description
Event	Event name
Date and time	dd.mm.yyyy hh:mm:ss.mss
I_0 pre-triggering current	Start/Trip -20ms current
I_0 fault current	Start/Trip current
Fault capacitive I_0	Start/Trip capacitive current
Fault resistive I_0	Start/Trip resistive current
Fault U_0 (%)	Start/Trip voltage (percentage of nominal)
Fault U_0 (V)	Start/Trip voltage (in Volts)
I_0 fault angle	0...360°
Trip time remaining	0 ms...1800s

Register	Description
Setting group in use	Setting group 1...8 active
Network GND	Unearthed, Petersen coil earthed, Earthed network
I_0 pre-fault current	Start -200ms current

4.4.6 Negative sequence overcurrent/ phase current reversal/ current unbalance protection (I2>; 46/46R/46L)

The current unbalance function is used for instant and time-delayed unbalanced network protection and for detecting broken conductors. The number of stages in the function depends on the device model. The operating decisions are based on negative and positive sequence current magnitudes which the function constantly measures. In the broken conductor mode (I2/I1) the minimum allowed loading current is also monitored in the phase current magnitudes.

There are two possible operating modes available: the I2 mode monitors the negative sequence current, while the I2/I1 mode monitors the ratio between the negative sequence current and the positive sequence current. The device calculates the symmetrical component magnitudes in use from the phase current inputs I_{L1}, I_{L2} and I_{L3}. The zero sequence current is also recorded into the registers as well as the angles of the positive, negative and zero sequence currents in order to better verify any fault cases.

Figure. 4.4.6 - 41. Simplified function block diagram of the I2> function.

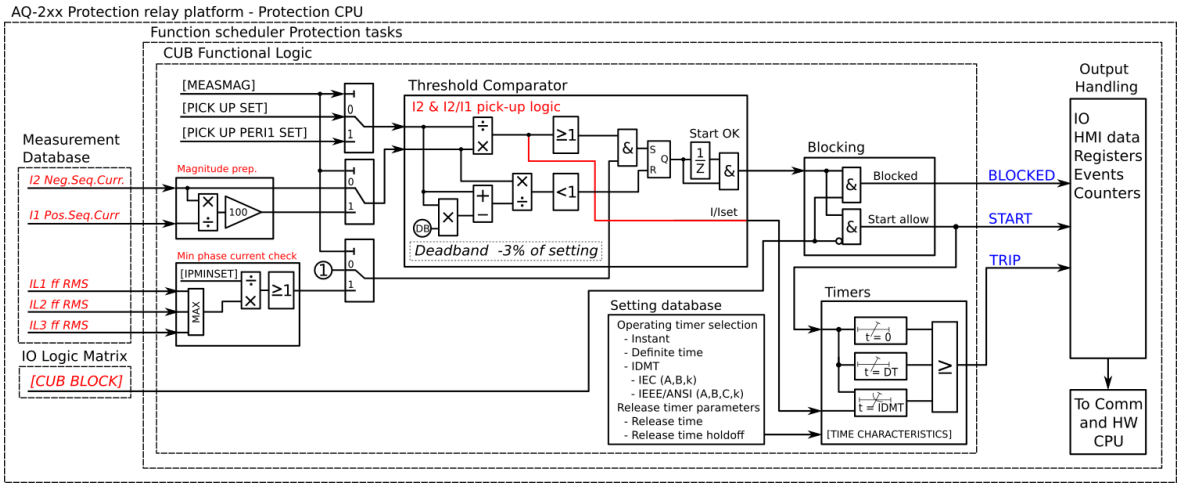

Measured input

The function block uses positive and negative sequence currents calculated from the phase current measurement channels. In the broken conductor mode (I2/I1) the function also uses fundamental frequency component of all phase currents to check the minimum current. Zero sequence and component sequence angles are used for fault registering and for fault analysis processing.

Table. 4.4.6 - 84. Measurement inputs of the I2> function.

Signal	Description
I1	Positive sequence current magnitude
I2	Negative sequence current magnitude

© Arcteq Relays Ltd
IM00021

Signal	Description
IZ	Zero sequence current magnitude
I1 ANG	Positive sequence current angle
I2 ANG	Negative sequence current angle
IZ ANG	Zero sequence current angle
I_{L1}RMS	Fundamental frequency component of phase L1 (A) current measurement
I_{L2}RMS	Fundamental frequency component of phase L2 (B) current measurement
I_{L3}RMS	Fundamental frequency component of phase L3 (C) current measurement

General settings

The following general settings define the general behavior of the function. These settings are static i.e. it is not possible to change them by editing the setting group.

Table. 4.4.6 - 85. General settings of the function.

Name	Range	Default	Description
I2> LN mode	• On • Blocked • Test • Test/ Blocked • Off	On	Set mode of CUB block. This parameter is visible only when *Allow setting of individual LN mode* is enabled in *General* menu.
I2> force status to	• Normal • Start • Trip • Blocked	Normal	Force the status of the function. Visible only when *Enable stage forcing* parameter is enabled in *General* menu.
Measurement side	• Side 1 • Side 2	Side 1	Defines which current measurement module is used by the function. Visible if the unit has more than one current measurement module.
Measured magnitude	• I2pu • I2/I1	I2pu	Defines whether the ratio between the positive and the negative sequence currents are supervised or whether only the negative sequence is used in detecting unbalance.

Pick-up settings

The setting parameters $I2_{set}$ *and* $I2/I1_{set}$ control the the pick-up of the I2> function. They define the maximum allowed measured negative sequence current or the negative/positive sequence current ratio before action from the function. The function constantly calculates the ratio between the I_{set} and the measured magnitude (I_m). The reset ratio of 97 % is built into the function and is always relative to the I_{xset} value. The reset ratio is the same for both modes.

Setting group selection controls the operating characteristics of the function, i.e. the user or user-defined logic can change function parameters while the function is running.

Table. 4.4.6 - 86. Pick-up settings.

Name	Range	Step	Default	Description
I2set	0.01…40.00×I_n	0.01×I_n	0.2×I_n	Pick-up setting for I2 mode
I2/I1set	1…200%	0.01%	20%	Pick-up setting for I2/I1 mode

Read-only parameters

The function's *Info* page displays useful, real-time information on the state of the protection function. It is accessed either through the device's HMI display, or through the setting tool software when it is connected to the device and its Live Edit mode is active.

Table. 4.4.6 - 87. Information displayed by the function.

Name	Range	Description
I2> LN behaviour	On Blocked Test Test/ Blocked Off	Displays the mode of CUB block. This parameter is visible only when *Allow setting of individual LN mode* is enabled in *General* menu.
I2> condition	Normal Start Trip Blocked	Displays the status of the protection function.

Function blocking

The blocking signal is evaluated at the start of each program cycle. The blocking signals are connected to the function's dedicated input, which can be configured in the *IO → Blocking Input Control* tab of the function.

- When the pick-up element activates and the blocking signal is not active, a START signal is generated and the function starts or continues the trip-time countdown.
- When the pick-up element activates and the blocking input signal is active, a BLOCKED signal is generated, and the function does not process the event further.
- When START signal is already active and the blocking input signal becomes active, the START signal is reset and BLOCKED signal is generated. The release-time characteristics are processed as if the fault condition had been cleared.

The blocking signal needs to reach the device minimum of 5 ms before the set operating delay has passed in order for the blocking to activate in time.

Operating time characteristics for trip and reset

The operating timers' behavior during a function can be set for TRIP signal and also for the release of the function in case the pick-up element is reset before the trip time has been reached. There are three basic operating modes available for the function:

- Instant operation: gives the TRIP signal with no additional time delay simultaneously with the start signal.
- Definite time operation (DT): gives the TRIP signal after a user-defined time delay regardless of the measured current as long as the current is above or below the i_{set} value and thus the pick-up element is active (independent time characteristics).

© Arcteq Relays Ltd
IM00021

- Inverse definite minimum time (IDMT): gives the TRIP signal after a time which is in relation to the set pick-up value I_{set} and the measured current I_m (dependent time characteristics).

Both IEC and IEEE/ANSI standard characteristics as well as user settable parameters are available for the IDMT operation.

Unique to the current unbalance protection is the availability of the “Curve2” delay which follows the formula below:

$$t = \frac{k}{{I_{2meas}}^2 - {I_{set}}^2}$$

- t = Operating time
- I_{2meas} = Calculated negative sequence
- k = Constant k value (user settable delay multiplier)
- I_{set}= Pick-up setting of the function

Figure. 4.4.6 - 42. Operation characteristics curve for I2> Curve2.

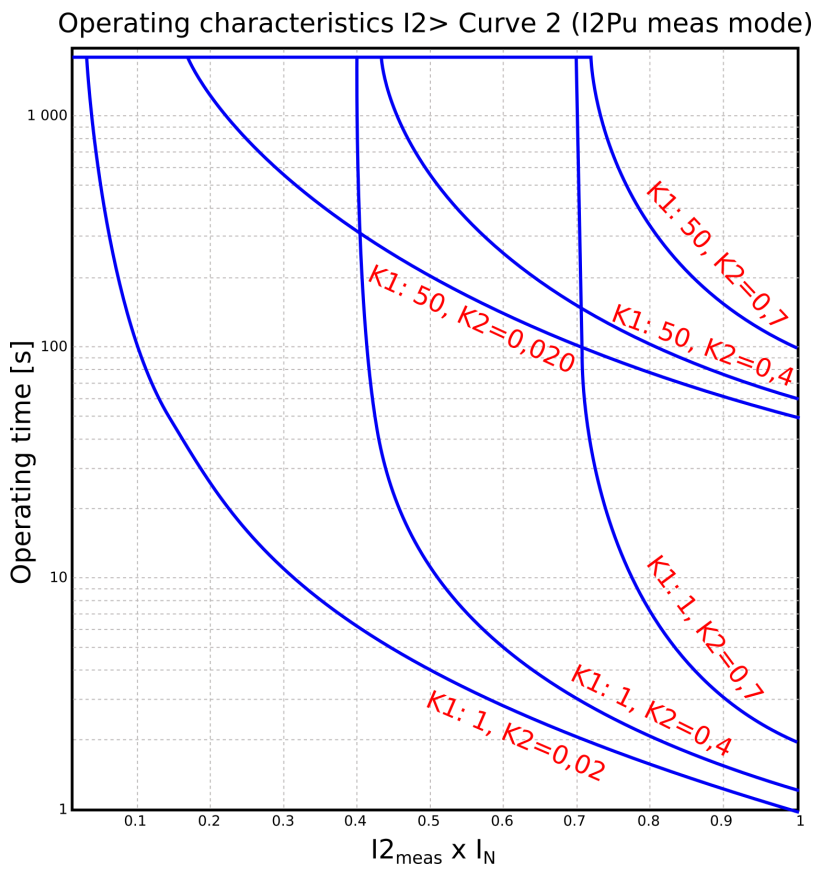

For a more detailed description on the time characteristics and their setting parameters, please refer to the "General properties of a protection function" chapter and its "Operating time characteristics" section.

Events and registers

The current unbalance function (abbreviated "CUB" in event block names) generates events and registers from the status changes in the events listed below. The user can select which event messages are stored in the main event buffer: ON, OFF, or both. The events triggered by the function are recorded with a time stamp.

The function's outputs can be used for direct I/O controlling and user logic programming. The function also provides a resettable cumulative counter for the START, TRIP and BLOCKED events.

The function offers four (4) independent stages; the events are segregated for each stage operation.

Table. 4.4.6 - 88. Event messages.

Event block name	Event names
CUB1...CUB4	Start ON/OFF
CUB1...CUB4	Trip ON/OFF
CUB1...CUB4	Block ON/OFF

The function registers its operation into the last twelve (12) time-stamped registers. The register of the function records the ON event process data for START, TRIP or BLOCKED. The table below presents the structure of the function's register content.

Table. 4.4.6 - 89. Register content.

Register	Description
Event	Event name
Date and time	dd.mm.yyyy hh:mm:ss.mss
Pre-trigger current	Start/Trip -20ms current
Fault current	Start/Trip current
Pre-fault current	Start -200ms current
Fault currents	I1, I2, IZ mag. and ang.
Trip time remaining	0 ms...1800s
Setting group in use	Setting group 1...8 active

4.4.7 Harmonic overcurrent protection (Ih>; 50H/51H/68H)

The harmonic overcurrent function is used for non-directional instant and time-delayed overcurrent detection and clearing. The number of stages in the function depends on the device model. The function constantly measures the selected harmonic component of the selected measurement channels, the value being either absolute value or relative to the RMS value.

© Arcteq Relays Ltd
IM00021

Figure. 4.4.7 - 43. Simplified function block diagram of the Ih> function.

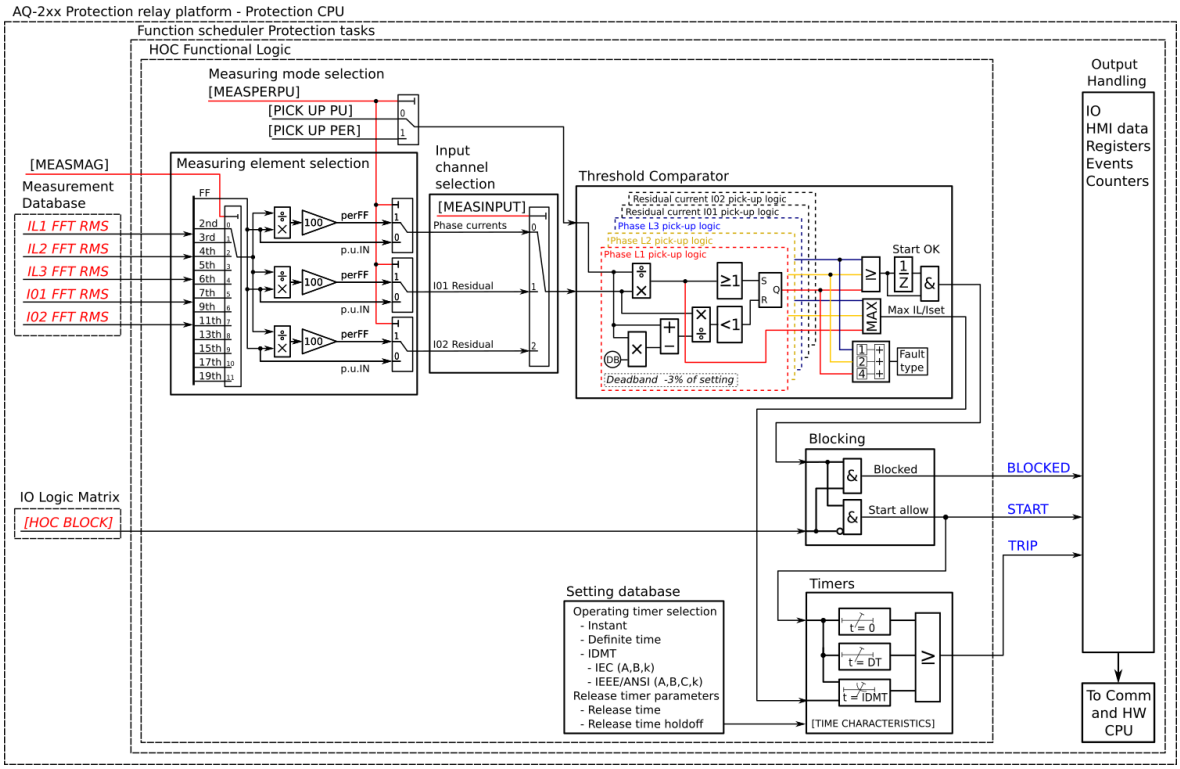

Measured input

The function block uses analog current measurement values from phase or residual currents. Each measurement input of the function block uses RMS (fundamental frequency component) values and harmonic components of the selected current input. The user can select the monitored magnitude to be equal to the per-unit RMS values of the harmonic component, or to the harmonic component percentage content compared to the RMS values.

Table. 4.4.7 - 90. Measurement inputs of the Ih> function.

Signal	Description
I_{L1}FFT	The magnitudes (RMS) of phase L1 (A) current components: - Fundamental - 2nd harmonic - 3rd harmonic - 4th harmonic - 5th harmonic - 6th harmonic - 7th harmonic - 9th harmonic - 11th harmonic - 13th harmonic - 15th harmonic - 17th harmonic - 19th harmonic.

Signal	Description
I_{L2}FFT	The magnitudes (RMS) of phase L2 (B) current components: - Fundamental - 2nd harmonic - 3rd harmonic - 4th harmonic - 5th harmonic - 6th harmonic - 7th harmonic - 9th harmonic - 11th harmonic - 13th harmonic - 15th harmonic - 17th harmonic - 19th harmonic.
I_{L3}FFT	The magnitudes (RMS) of phase L3 (C) current components: - Fundamental - 2nd harmonic - 3rd harmonic - 4th harmonic - 5th harmonic - 6th harmonic - 7th harmonic - 9th harmonic - 11th harmonic - 13th harmonic - 15th harmonic - 17th harmonic - 19th harmonic.
I_{01}FFT	The magnitudes (RMS) of residual $I0_1$ current components: - Fundamental - 2nd harmonic - 3rd harmonic - 4th harmonic - 5th harmonic - 6th harmonic - 7th harmonic - 9th harmonic - 11th harmonic - 13th harmonic - 15th harmonic - 17th harmonic - 19th harmonic.

© Arcteq Relays Ltd
IM00021

Signal	Description
I_{02}FFT	The magnitudes (RMS) of residual $I0_2$ current components: - Fundamental - 2nd harmonic - 3rd harmonic - 4th harmonic - 5th harmonic - 6th harmonic - 7th harmonic - 9th harmonic - 11th harmonic - 13th harmonic - 15th harmonic - 17th harmonic - 19th harmonic.

General settings

The function can be set to monitor the ratio between the measured harmonic and either the measured fundamental component or the per unit value of the harmonic current. The user must select the correct measurement input.

Table. 4.4.7 - 91. Operating mode selection settings.

Name	Range	Default	Description
Ih> LN mode	• On • Blocked • Test • Test/ Blocked • Off	On	Set mode of HOC block. This parameter is visible only when *Allow setting of individual LN mode* is enabled in *General* menu.
Ih> force status to	• Normal • Start • Trip • Blocked	Normal	Force the status of the function. Visible only when *Enable stage forcing* parameter is enabled in *General* menu.
Ih> measurement side	• Side 1 • Side 2	Side 1	Defines which current measurement module is used by the function. Visible if the unit has more than one current measurement module.

Name	Range	Default	Description
Harmonic selection	• 2nd harmonic • 3rd harmonic • 4th harmonic • 5th harmonic • 6th harmonic • 7th harmonic • 9th harmonic • 11th harmonic • 13th harmonic • 15th harmonic • 17th harmonic • 19th harmonic	2nd harmonic	Selection of the monitored harmonic component.
Per unit or relative	• × I_n • Ih/IL	× I_n	Selection of the monitored harmonic mode. Either directly per unit x I_n or in relation to the fundamental frequency magnitude.
Measurement input	• IL1/IL2/IL3 • I01 • I02	IL1/IL2/IL3	Selection of the measurement input (either phase current or residual current).

Pick-up settings

The setting parameter Ih_{set} per unit or *Ih/IL* (depending on the selected operating mode) controls the pick-up of the Ih> function. This defines the maximum allowed measured current before action from the function. The function constantly calculates the ratio between the Ih_{set} per unitor *Ih/IL* and the measured magnitude (I_m) for each of the three phases. The reset ratio of 97 % is built into the function and is always relative to the Ih_{set} per unit or *Ih/IL*value. The setting value is common for all measured phases, and when the I_m exceeds the I_{set} value (in single, dual or all phases) it triggers the pick-up operation of the function.

Setting group selection controls the operating characteristics of the function, i.e. the user or user-defined logic can change function parameters while the function is running.

Table. 4.4.7 - 92. Pick-up settings.

Name	Range	Step	Default	Description
Ih_{set} pu	0.05…2.00×I_n	0.01×I_n	0.20×I_n	Pick-up setting (per unit monitoring)

© Arcteq Relays Ltd
IM00021

Name	Range	Step	Default	Description
Ih/IL	5.00…200.00%	0.01%	20.00%	Pick-up setting (percentage monitoring)

Read-only parameters

The function's *Info* page displays useful, real-time information on the state of the protection function. It is accessed either through the device's HMI display, or through the setting tool software when it is connected to the device and its Live Edit mode is active.

Table. 4.4.7 - 93. Information displayed by the function.

Name	Range	Step	Description
Ih> behaviour	• On • Blocked • Test • Test/Blocked • Off	-	Displays the mode of HOC block. This parameter is visible only when *Allow setting of individual LN mode* is enabled in *General* menu.
Ih> condition	• Normal • Start • Trip • Blocked	-	Displays the status of the protection function.
Ih meas/ Ih set now	0.00...100000.00I_m/I_{set}	0.01I_m/I_{set}	The ratio between the monitored residual current and the pick-up value.
Expected operating time	0.000...1800.000s	0.005s	Displays the expected operating time when a fault occurs. When IDMT mode is used, the expected operating time depends on the measured voltage value. If the measured voltage changes during a fault, the expected operating time changes accordingly.
Time remaining to trip	-1800.000...1800.000s	0.005s	When the function has detected a fault and counts down time towards a trip, this displays how much time is left before tripping occurs.

Function blocking

The blocking signal is evaluated at the start of each program cycle. The blocking signals are connected to the function's dedicated input, which can be configured in the *IO → Blocking Input Control* tab of the function.

- When the pick-up element activates and the blocking signal is not active, a START signal is generated and the function starts or continues the trip-time countdown.
- When the pick-up element activates and the blocking input signal is active, a BLOCKED signal is generated, and the function does not process the event further.
- When START signal is already active and the blocking input signal becomes active, the START signal is reset and BLOCKED signal is generated. The release-time characteristics are processed as if the fault condition had been cleared.

The blocking signal needs to reach the device minimum of 5 ms before the set operating delay has passed in order for the blocking to activate in time.

Operating time characteristics for trip and reset

This function supports definite time delay (DT) and inverse definite minimum time delay (IDMT). For detailed information on these delay types please refer to the chapter "General properties of a protection function" and its section "Operating time characteristics".

Events and registers

The harmonic overcurrent function (abbreviated "HOC" in event block names) generates events and registers from the status changes in the events listed below. The user can select which event messages are stored in the main event buffer: ON, OFF, or both. The events triggered by the function are recorded with a time stamp.

The function's outputs can be used for direct I/O controlling and user logic programming. The START signal can be used to block other stages; if the situation lasts longer, the TRIP signal can be used on other actions as time-delayed. The function also provides a resettable cumulative counter for the START, TRIP and BLOCKED events.

The function offers four (4) independent stages; the events are segregated for each stage operation.

Table. 4.4.7 - 94. Event description.

Event block name	Event names
HOC1...HOC4	Start ON/OFF
HOC1...HOC4	Trip ON/OFF
HOC1...HOC4	Block ON/OFF

The function registers its operation into the last twelve (12) time-stamped registers. The register of the function records the ON event process data for START, TRIP or BLOCKED. The table below presents the structure of the function's register content.

Table. 4.4.7 - 95. Register content.

Register	Description
Date and time	dd.mm.yyyy hh:mm:ss.mss
Event	Event name
Fault type	L1-G…L1-L2-L3
Pre-trigger current	Start/Trip -20ms current
Fault current	Start/Trip current
Pre-fault current	Start -200ms current
Trip time remaining	0 ms...1800s
Setting group in use	Setting group 1...8 active

© Arcteq Relays Ltd
IM00021

4.4.8 Circuit breaker failure protection (CBFP; 50BF/52BF)

The circuit breaker failure protection function is used for monitoring the circuit breaker operation after it has received a TRIP signal. The function can also be used to retrip a failing breaker; if the retrip fails, an incoming feeder circuit breaker can be tripped by using the function's CBFP output. The retrip functionality can be disabled if the breaker does not have two trip coils.

The function can be triggered by the following:

- overcurrent (phase and residual)
- digital output monitor
- digital signal
- any combination of the above-mentioned triggers.

In the current-dependent mode the function constantly measures phase current magnitudes and the selected residual current. In the signal-dependent mode any of the device's binary signals (trips, starts, logical signals etc.) can be used to trigger the function. In the digital output-dependent mode the function monitors the status of the selected output relay control signal.

Figure. 4.4.8 - 44. Simplified function block diagram of the CBFP function.

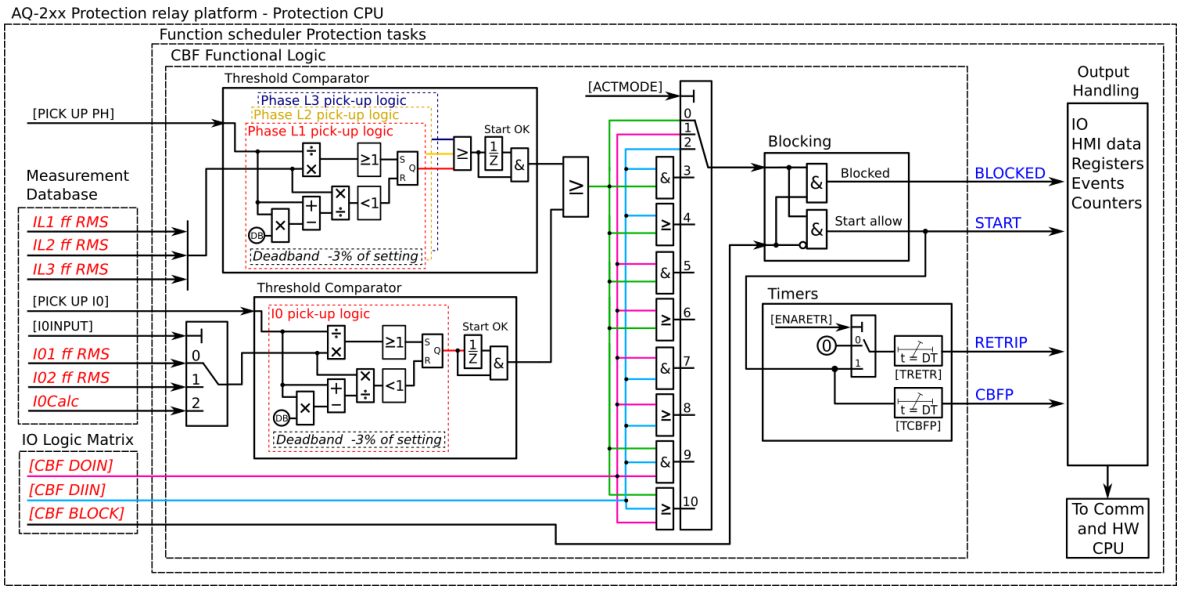

Measured input

The function block uses fundamental frequency component of phase current and residual current measurement values. The user can select I01, I02 or the calculated I0 for the residual current measurement.

Table. 4.4.8 - 96. Measurement inputs of the CBFP function.

Signal	Description
I_{L1}RMS	Fundamental frequency component of phase L1 (A) current measurement
I_{L2}RMS	Fundamental frequency component of phase L2 (B) current measurement
I_{L3}RMS	Fundamental frequency component of phase L3 (C) current measurement
I_{01}RMS	Fundamental frequency component of residual input I_{01} measurement

Signal	Description
I_{02}RMS	Fundamental frequency component of residual input I_{02} measurement
I_{0Calc}	Calculated residual current from the phase current inputs

General settings

The following general settings define the general behavior of the function. These settings are static i.e. it is not possible to change them by editing the setting group.

Table. 4.4.8 - 97. CBFP monitoring signal definitions.

Name	Description
Signal in monitor	Defines which TRIP events of the used protection functions trigger the CBFP countdown. For the CBFP function to monitor the signals selected here, the "Operation mode selection" parameter must be set to a mode that includes signals (e.g. "Signals only", "Signals or DO", "Current and signals and DO").
Trip monitor	Defines which output relay of the used protection functions trigger the CBFP countdown. For the CBFP function to monitor the output relays selected here, the "Operation mode selection" parameter must be set to a mode that includes digital outputs (e.g. "DO only", "Current and DO", "Current or signals or DO").

Table. 4.4.8 - 98. General settings of the function.

Name	Range	Default	Description
CBFP LN mode	• On • Blocked • Test • Test/ Blocked • Off	On	Set mode of CBF block. This parameter is visible only when *Allow setting of individual LN mode* is enabled in *General* menu.
CBFP force status to	• Normal • Start • ReTrip • CBFP • Blocked	Normal	Force the status of the function. Visible only when *Enable stage forcing* parameter is enabled in *General* menu.
Measurement side	• Side 1 • Side 2	Side 1	Defines which current measurement module is used by the function.

Pick-up settings

The setting parameters I_{set} and $I0_{set}$ control the pick-up and the activation of the current-dependent CBFP function. They define the minimum allowed measured current before action from the function. The function constantly calculates the ratio between the I_{set} or the $I0_{set}$ and the measured magnitude (I_m) for each of the three phases and the selected residual current input. The reset ratio of 97 % is built into the function and is always relative to the I_{set} value. The setting value is common for all measured phases. When the I_m exceeds the I_{set} value (in single, dual or all phases) it triggers the pick-up operation of the function.

© Arcteq Relays Ltd
IM00021

Setting group selection controls the operating characteristics of the function, i.e. the user or user-defined logic can change function parameters while the function is running.

Table. 4.4.8 - 99. Operating mode and input signals selection.

Name	Range	Step	Default	Description
I0Input	• Not in use • I01 • I02 • I0Calc	-	Not in use	Selects the residual current monitoring source, which can be either from the two separate residual measurements (I01 and I02) or from the phase current's calculated residual current.
Actmode	• Current only • DO only • Signals only • Current and DO • Current or DO • Current and signals • Current or signals • Signals and DO • Signals or DO • Current or DO or signals • Current and DO and Signals	-	Current only	Selects the operating mode. The mode can be dependent on current measurement, binary signal status, output relay status ("DO"), or a combination of the three.

Table. 4.4.8 - 100. Pick-up settings.

Name	Range	Step	Default	Description
I_{set}	0.01…40.00×I_n	0.01×I_n	0.20×I_n	The pick-up threshold for the phase current measurement. This setting limit defines the upper limit for the phase current pick-up element.
$I0_{set}$	0.005...40.000×I_n	0.001×I_n	1.200×I_n	The pick-up threshold for the residual current measurement. This setting limit defines the upper limit for the phase current pick-up element.

Read-only parameters

The function's *Info* page displays useful, real-time information on the state of the protection function. It is accessed either through the device's HMI display, or through the setting tool software when it is connected to the device and its Live Edit mode is active.

Table. 4.4.8 - 101. Information displayed by the function.

Name	Range	Description
CBFP LN behaviour	• On • Blocked • Test • Test/ Blocked • Off	Displays the mode of CBF block. This parameter is visible only when *Allow setting of individual LN mode* is enabled in *General* menu.
CBFP condition	• Normal • Start • ReTrip • CBFP On • Blocked	Displays status of the protection function.

Function blocking

The blocking signal is evaluated at the start of each program cycle. The blocking signals are connected to the function's dedicated input, which can be configured in the *IO → Blocking Input Control* tab of the function.

- When the pick-up element activates and the blocking signal is not active, a START signal is generated and the function starts or continues the trip-time countdown.
- When the pick-up element activates and the blocking input signal is active, a BLOCKED signal is generated, and the function does not process the event further.
- When START signal is already active and the blocking input signal becomes active, the START signal is reset and BLOCKED signal is generated. The release-time characteristics are processed as if the fault condition had been cleared.

The blocking signal needs to reach the device minimum of 5 ms before the set operating delay has passed in order for the blocking to activate in time.

Operating time characteristics

The operating timers' behavior during a function can be set depending on the application. The same pick-up signal starts both timers. When retrip is used the time grading should be set as follows: the sum of specific times (i.e. the retrip time, the expected operating time, and the pick-up conditions' release time) is shorter the set CBFP time. This way, when retripping another breaker coil clears the fault, any unnecessary function triggers are avoided.

The following table presents the setting parameters for the function's operating time characteristics.

© Arcteq Relays Ltd
IM00021

Table. 4.4.8 - 102. Setting parameters for operating time characteristics.

Name	Range	Step	Default	Description
Retrip	• No • Yes	-	Yes	Retrip enabled or disabled. When the retrip is disabled, the output will not be visible and the TRetr setting parameter will not be available.
Retrip time delay	0.000…1800.000s	0.005s	0.100s	Retrip start the timer. This setting defines how long the starting condition has to last before a RETRIP signal is activated.
CBFP	0.000…1800.000s	0.005s	0.200s	CBFP starts the timer. This setting defines how long the starting condition has to last before the CBFP signal is activated.

The following figures present some typical cases of the CBFP function.

Trip, Retrip and CBFP in the device configuration

Figure. 4.4.8 - 45. Wiring diagram when Trip, Retrip and CBFP are configured to the device.

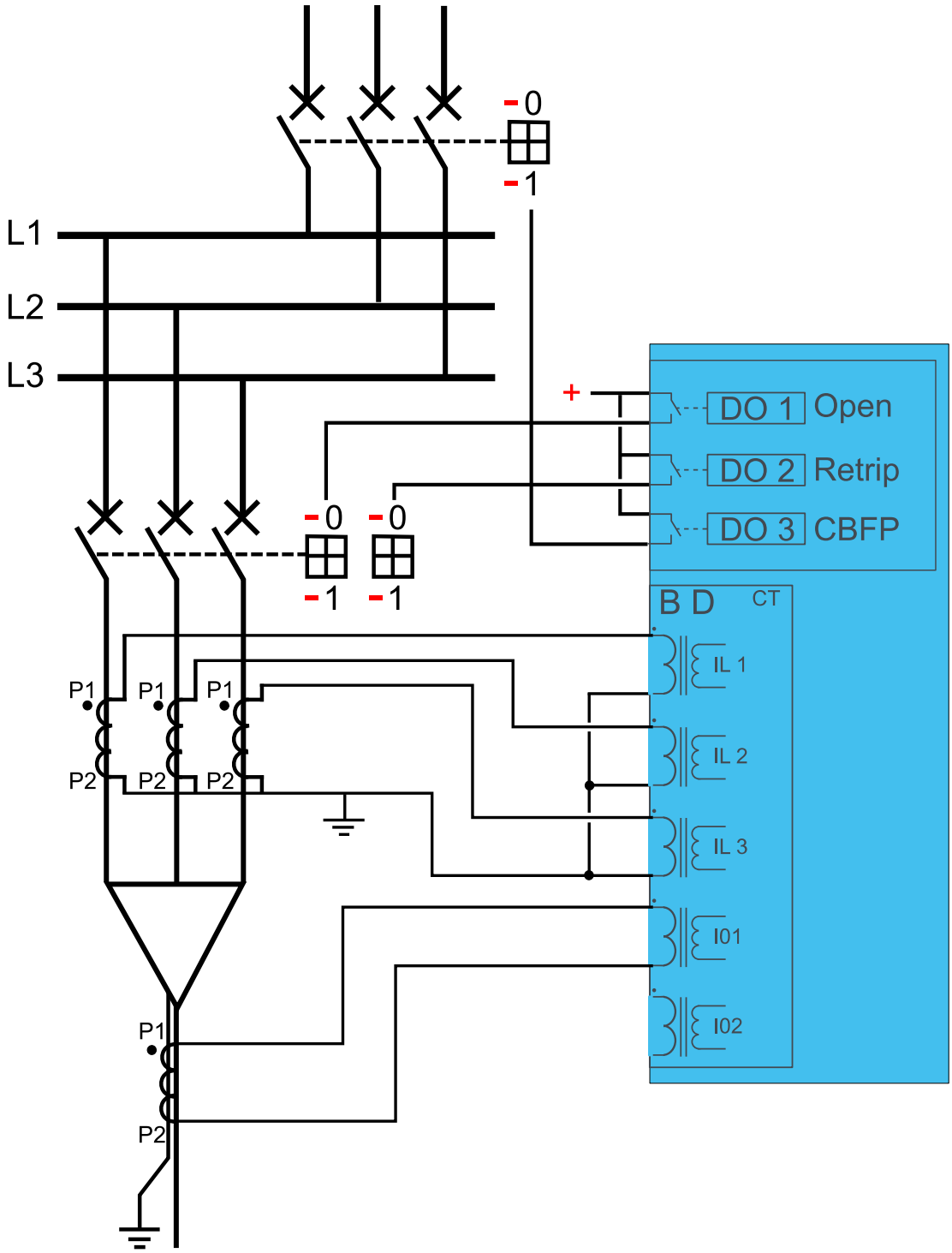

The retrip functionality can be used in applications whose circuit breaker has a retrip or a redundant trip coil available. The TRIP signal is normally wired to the breaker's trip coil from the device's trip output. The retrip is wired from its own device output contact in parallel with the circuit breaker's redundant trip coil. The CBFP signal is normally wired from its device output contact to the incoming feeder circuit breaker. Below are a few operational cases regarding the various applications.

© Arcteq Relays Ltd
IM00021

Figure. 4.4.8 - 46. Retrip and CBFP when "Current" is the selected criterion.

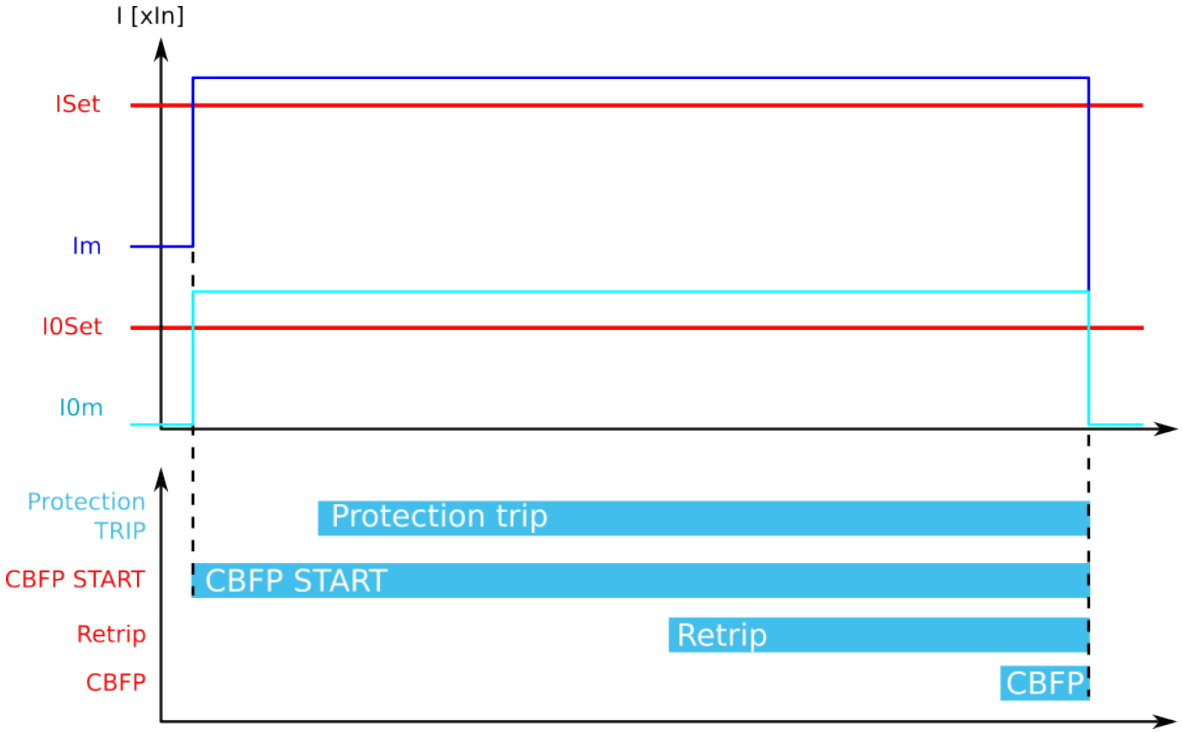

When the current threshold setting of I_{set} and/or $I0_{set}$ is exceeded, the current-based protection is activated and the counters for RETRIP and CBFP start calculating the set operating time. The tripping of the primary protection stage is not monitored in this configuration. Therefore, if the current is not reduced below the setting limit, a RETRIP signal is sent to the redundant trip coil. If the current is not reduced within the set time limit, the function also sends a CBFP signal to the incoming feeder breaker. If the primary protection function clears the fault, both counters (RETRIP and CBFP) are reset as soon as the measured current is below the threshold settings.

Figure. 4.4.8 - 47. Retrip and CBFP when "Current and DO" is the selected criterion.

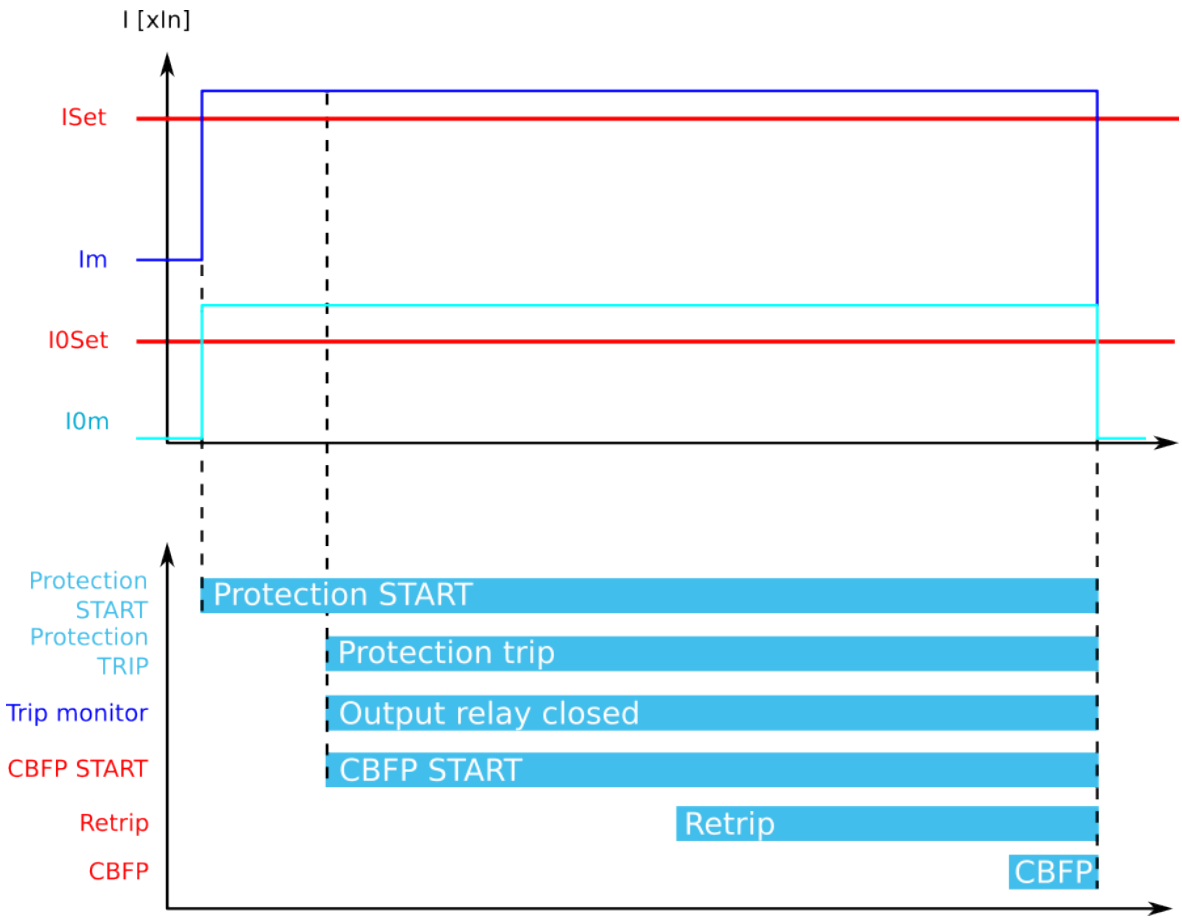

When the current threshold setting of I_{set} and/or $I0_{set}$ is exceeded, the current-based protection is activated. At the same time, the counters for RETRIP and CBFP are halted until the monitored output contact is controlled (that is, until the primary protection operates). When the tripping signal reaches the primary protection stage, the RETRIP and CBFP counters start calculating the set operating time. The tripping of the primary protection stage is constantly monitored in this configuration. If the current is not reduced below the setting limit or the primary stage tripping signal is not reset, a RETRIP signal is sent to the redundant trip coil. If the retripping fails and the current is not reduced below the setting limit or the primary stage tripping signal is not reset, the function also sends a CBFP signal to the incoming feeder circuit breaker. If the primary protection function clears the fault, both counters (RETRIP and CBFP) are reset as soon as the measured current is below the threshold settings or the tripping signal is reset. This configuration allows the CBFP to be controlled with current-based functions alone, and other function trips can be excluded from the CBFP functionality.

© Arcteq Relays Ltd
IM00021

Figure. 4.4.8 - 48. Retrip and CBFP when "Current or DO" is the selected criterion.

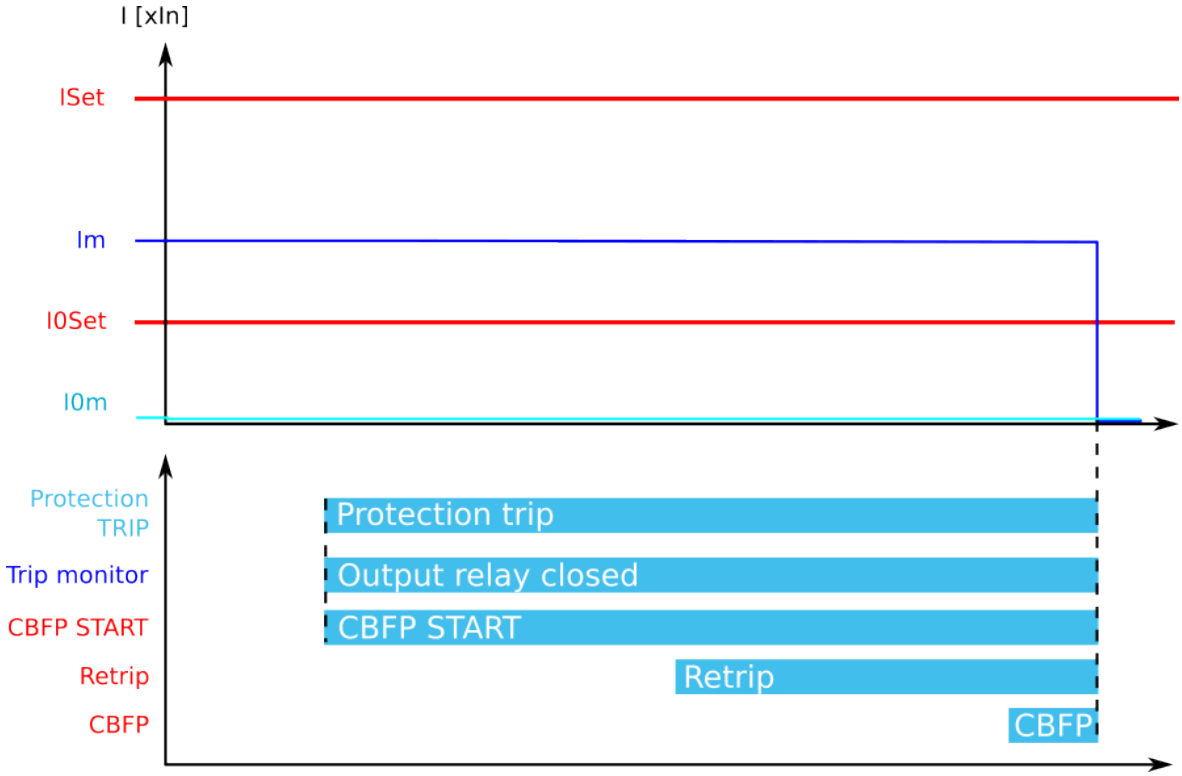

When the current threshold setting of I_{set} and/or $I0_{set}$ is exceeded, or the TRIP signal reaches the primary protection stage, the function starts counting down towards the RETRIP and CBFP signals. The tripping of the primary protection stage is constantly monitored in this configuration regardless of the current's status. The pick-up of the CBFP is active unless the current is reduced below the setting limit and the primary stage tripping signal is reset. If either of these conditions is met (i.e. the current is above the limit or the signal is active) for the duration of the set RETRIP time delay, a RETRIP signal is sent to the redundant trip coil. If either of the conditions is active for the duration of the set CBFP time delay, a CBFP signal is sent to the incoming feeder circuit breaker. If the primary protection function clears the fault, both counters (RETRIP and CBFP) are reset as soon as the measured current is below the threshold settings and the tripping signal is reset. This configuration allows the CBFP to be controlled with current-based functions alone, with added security from current monitoring. Other function trips can also be included in the CBFP functionality.

Trip and CBFP in the device configuration

Figure. 4.4.8 - 49. Wiring diagram when Trip and CBFP are configured to the device.

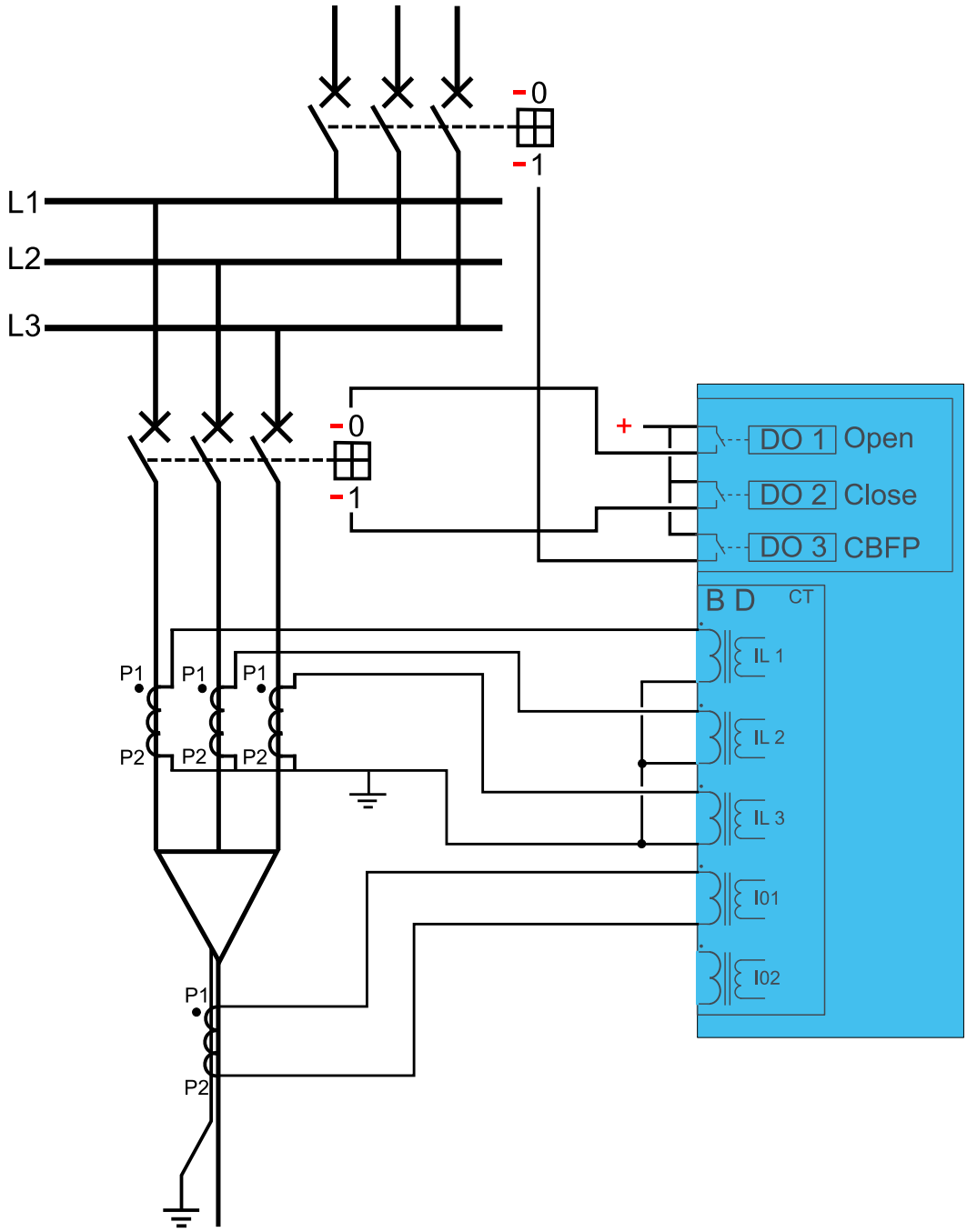

Probably the most common application is when the device's trip output controls the circuit breaker trip coil, while one dedicated CBFP contact controls the CBFP function. Below are a few operational cases regarding the various applications and settings of the CBFP function.

© Arcteq Relays Ltd
IM00021

Figure. 4.4.8 - 50. CBFP when "Current" is the selected criterion.

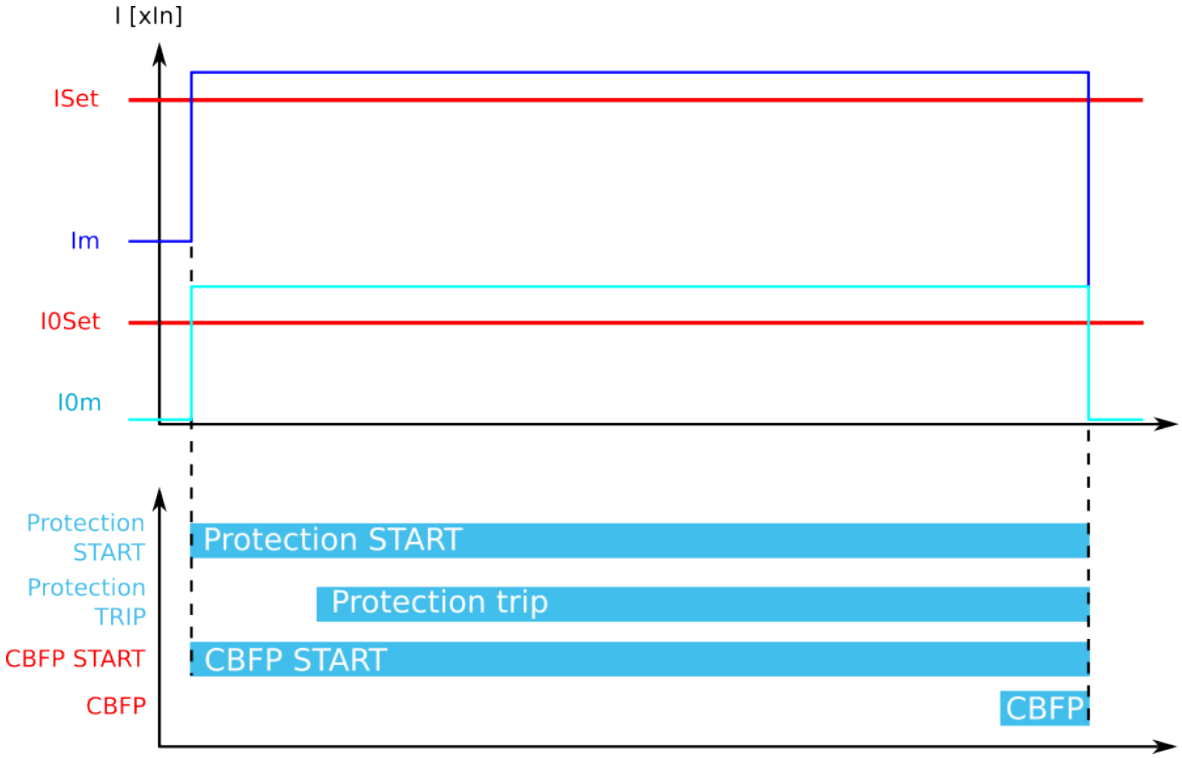

When the current threshold setting of I_{set} and/or $I0_{set}$ is exceeded, the current-based protection is activated and the counter for CBFP starts calculating the set operating time. The tripping of the primary protection stage is not monitored in this configuration. Therefore, if the current is not reduced below the setting limit, a CBFP signal is sent to the incoming feeder circuit breaker. If the primary protection function clears the fault, the counter for CBFP resets as soon as the measured current is below the threshold settings.

Figure. 4.4.8 - 51. CBFP when "Current and DO" is the selected criterion.

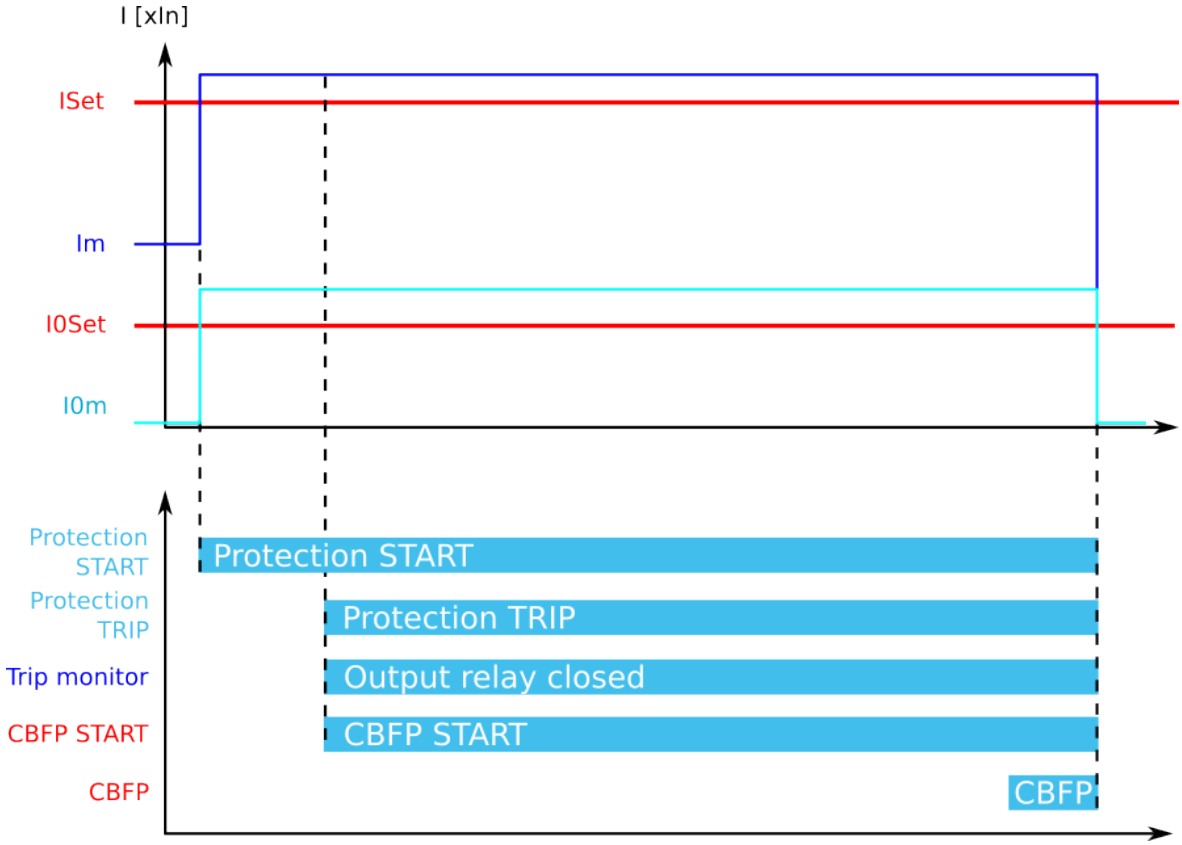

When the current threshold setting of I_{set} and/or $I0_{set}$ is exceeded, the current-based protection is activated. At the same time, the counter for CBFP is halted until the monitored output contact is controlled (that is, until the primary protection operates). When the tripping signal reaches the primary protection stage, the CBFP counter starts calculating the set operating time. The tripping of the primary protection stage is constantly monitored in this configuration. If the current is not reduced below the setting limit or the primary stage tripping signal is not reset, a CBFP signal is sent to the incoming feeder circuit breaker. The time delay counter for CBFP is reset as soon as the measured current is below the threshold settings or the tripping signal is reset. This configuration allows the CBFP to be controlled by current-based functions alone, and other function trips can be excluded from the CBFP functionality.

© Arcteq Relays Ltd
IM00021

Figure. 4.4.8 - 52. CBFP when "Current or DO" is the selected criterion.

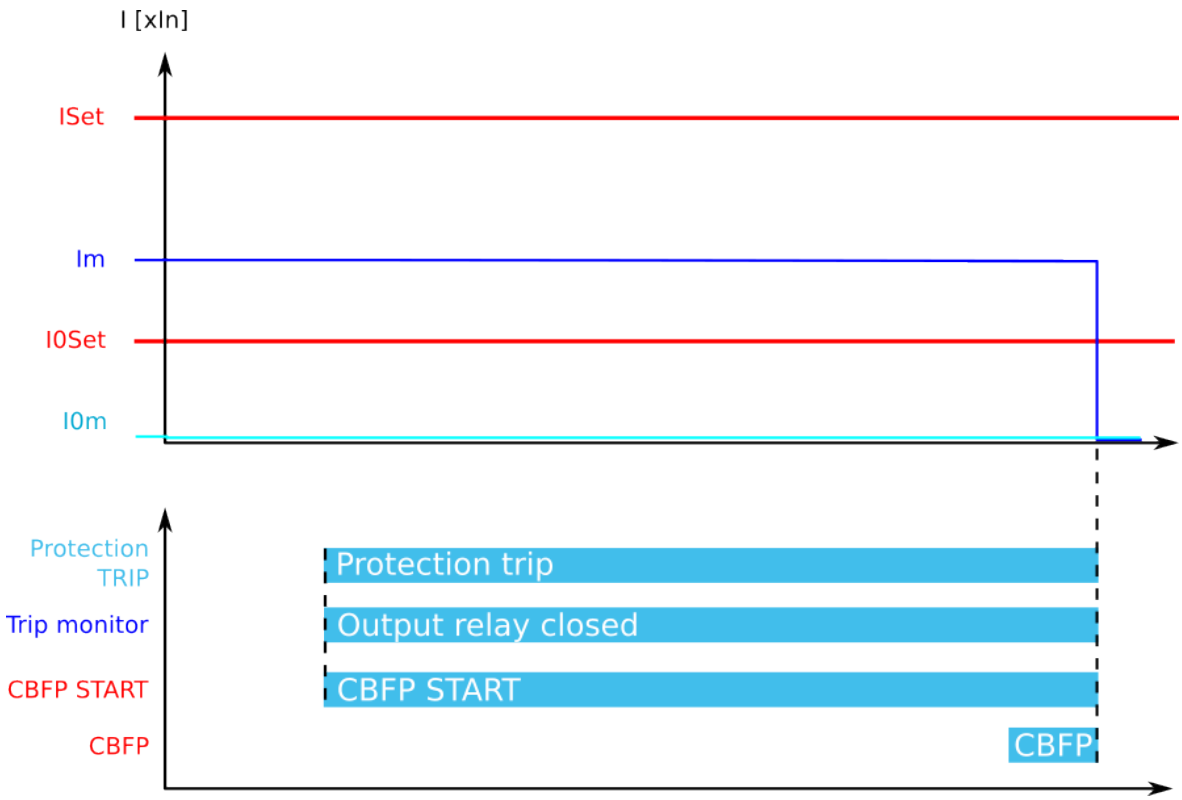

When the current threshold setting of I_{set} and/or $I0_{set}$ is exceeded, or the TRIP signal reaches the primary protection stage, the function starts counting down towards the CBFP signal. The tripping of the primary protection stage is constantly monitored in this configuration regardless of the current's status. The pick-up of the CBFP is active unless the current is reduced below the setting limit and the primary stage tripping signal is reset. If either of these conditions is met (i.e. the current is above the limit or the signal is active) for the duration of the set CBFP time delay, a CBFP signal is sent to the incoming feeder circuit breaker. The time delay counter for CBFP is reset as soon as the measured current is below the threshold settings and the tripping signal is reset. This configuration allows the CBFP to be controlled by current-based functions alone, with added security from current monitoring. Other function trips can also be included to the CBFP functionality.

Device configuration as a dedicated CBFP unit

Figure. 4.4.8 - 53. Wiring diagram when the device is configured as a dedicated CBFP unit.

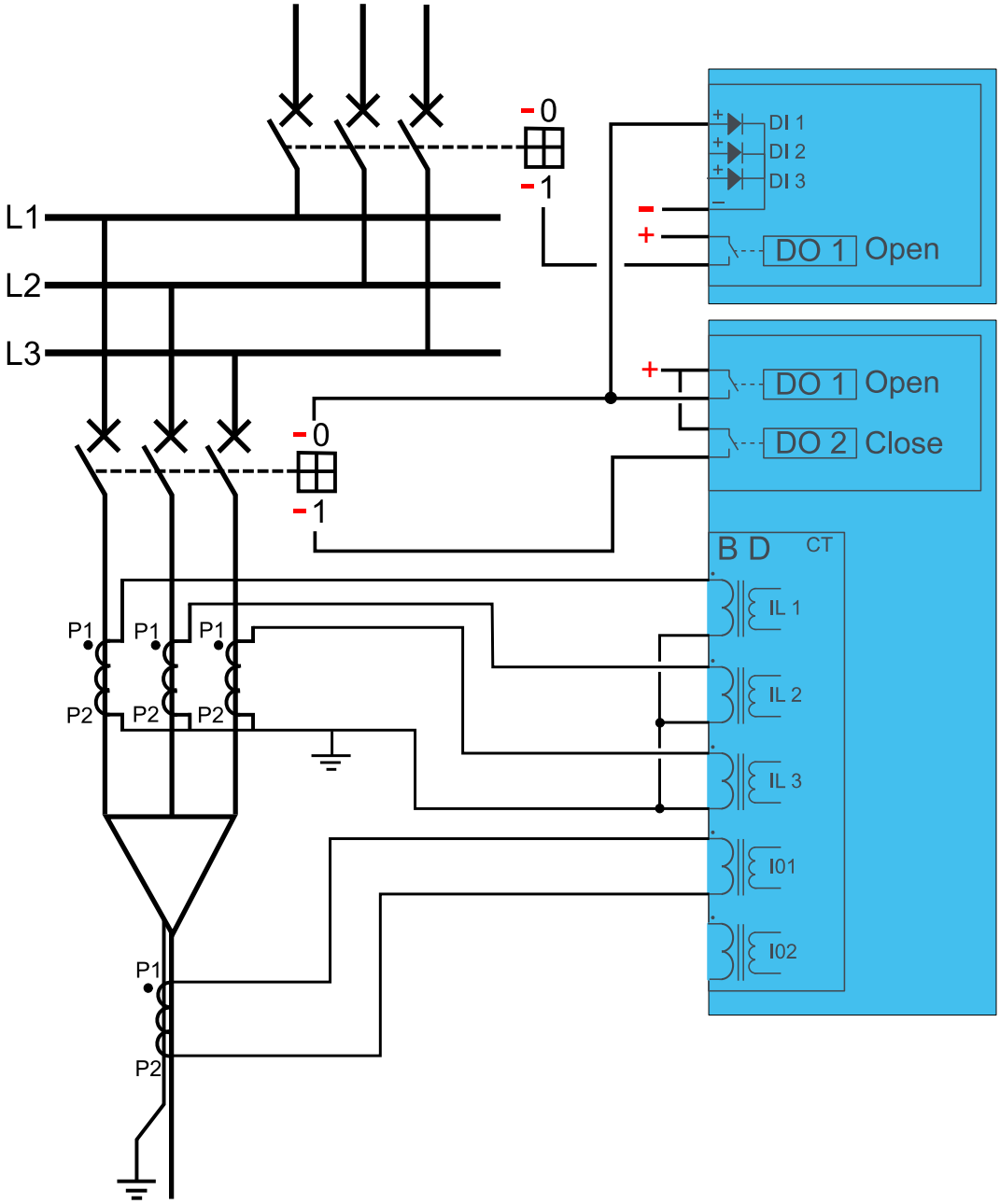

Some applications require a dedicated circuit breaker protection unit. When the CBFP function is configured to operate with a digital input signal, it can be used in these applications. When a device is used for this purpose, the tripping signal is wired to the device's digital input and the device's own TRIP signal is used only for the CBFP purpose. In this application's incoming feeder the RETRIP and CBFP signals are also available with different sets of requirements. The RETRIP signal can be used for tripping the section's feeder breaker and the CBFP signal for tripping the incoming feeder. The following example does not use retripping and the CBFP signal is used as the incoming feeder trip from the outgoing breaker trip signal. The TRIP signal can also be transported between different devices by using GOOSE messages.

© Arcteq Relays Ltd
IM00021

Figure. 4.4.8 - 54. Dedicated CBFP operation from digital input signal.

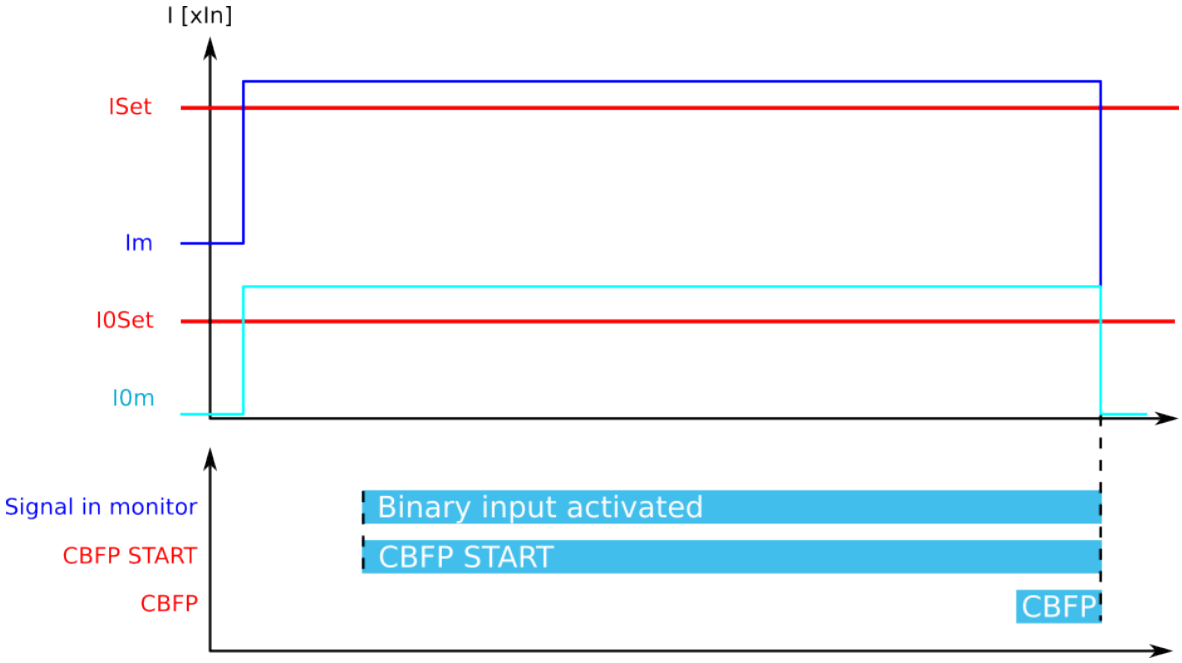

In this mode the CBFP operates only from a digital input signal. Both current and output relay monitoring can be used. The counter for the CBFP signal begins when the digital input is activated. If the counter is active until the CBFP counter is used, the device issues a CBFP command to the incoming feeder circuit breaker. In this application the device tripping signals from all outgoing feeders can be connected to one, dedicated CBFP device which operates either on current-based protection or on all possible faults' CBFP protection.

Events and registers

The circuit breaker failure protection function (abbreviated "CBF" in event block names) generates events and registers from the status changes in the events listed below. The user can select which event messages are stored in the main event buffer: ON, OFF, or both. The events triggered by the function are recorded with a time stamp.

The function's outputs can be used for direct I/O controlling and user logic programming. The function also provides a resettable cumulative counters for RETRIP, CBFP, CBFP START and BLOCKED events.

Table. 4.4.8 - 103. Event messages.

Event block name	Event names
CBF1	Start ON/OFF
CBF1	Retrip ON/OFF
CBF1	CBFP ON/OFF
CBF1	Block ON/OFF
CBF1	DO monitor ON/OFF
CBF1	Signal ON/OFF
CBF1	Phase current ON/OFF
CBF1	Res current ON/OFF

The function registers its operation into the last twelve (12) time-stamped registers. The register of the function records the ON event process data for ACTIVATED, BLOCKED, etc. The table below presents the structure of the function's register content.

Table. 4.4.8 - 104. Register content.

Register	Description
Date and time	dd.mm.yyyy hh:mm:ss.mss
Event	Event name
Max phase current	Highest phase current
Residual current	I01, I02 channel or calculated residual current
Time to RETR	Time remaining to retrip activation
Time to CBFP	Time remaining to CBFP activation
Setting group in use	Setting group 1...8 active

4.4.9 Low-impedance or high-impedance restricted earth fault/ cable end differential protection (I0d>; 87N)

The low-impedance or high-impedance restricted earth fault function is used for residual differential current measurement for transformers. This function can also be used as the cable end differential function. The operating principle is low-impedance differential protection with bias characteristics the user can set. A differential current is calculated with the sum of the phase currents and the selected residual current input. In cable end differential mode the function provides natural measurement unbalance compensation for higher operating sensitivity in monitoring cable end faults.

The restricted earth fault function constantly monitors phase currents and selected residual current instant values as well as calculated bias current and differential current magnitudes.

Figure. 4.4.9 - 55. Simplified function block diagram of the I0d> function.

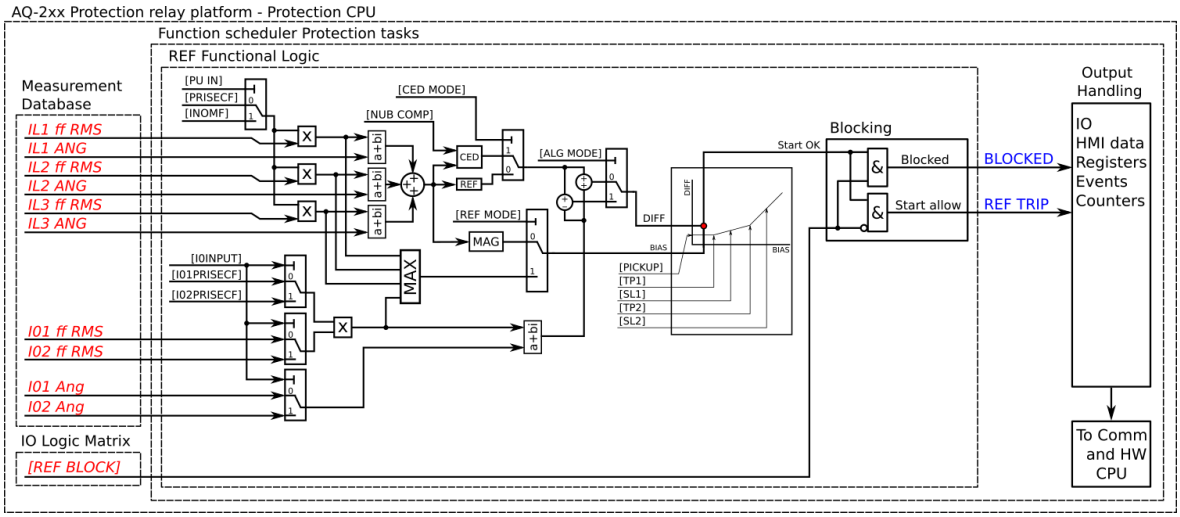

© Arcteq Relays Ltd
IM00021

Measured input

The function block uses fundamental frequency component of phase current and resisual current measurement values. Both calculated residual currents and measured residual currents are always used. The user can select either I_{01} or I_{02} for residual current measurement.

Please note that when the function is in cable end differential mode, the difference is only calculated when the measured I_0 current is available.

Table. 4.4.9 - 105. Measurement inputs of the I0d> function.

Signal	Description
I_{L1}RMS	Fundamental frequency component of phase L1 (A) current measurement
I_{L2}RMS	Fundamental frequency component of phase L2 (B) current measurement
I_{L3}RMS	Fundamental frequency component of phase L3 (C) current measurement
I_{01}RMS	Fundamental frequency component of residual input I01 measurement
I_{02}RMS	Fundamental frequency component of residual input I02 measurement
I_{L1}Ang	Angle of phase L1 (A) current
I_{L2} Ang	Angle of phase L2 (B) current
I_{L3} Ang	Angle of phase L3 (C) current
I_{01} Ang	Angle of residual input I01
I_{02} Ang	Angle of residual input I02

General settings

The following general settings define the general behavior of the function. These settings are static i.e. it is not possible to change them by editing the setting group.

Table. 4.4.9 - 106. General settings.

Name	Range	Default	Description
I0d> LN mode	• On • Blocked • Test • Test/ Blocked • Off	On	Set mode of NOC block. This parameter is visible only when *Allow setting of individual LN mode* is enabled in *General* menu.
I0d> force status to	• Normal • Trip • Blocked	Normal	Force the status of the function. Visible only when *Enable stage forcing* parameter is enabled in *General* menu.
I0d> in side	• Side 1 • Side 2	Side 1	Defines which current measurement module is used by the function.

Name	Range	Default	Description
Restricted earth fault (REF) or Cable End Differential	• REF • CED	REF	Selection of the operating characteristics. If REF is selected, the function operates with normal accuracies. If CED is selected, the natural unbalance created by the phase current CT:s can be compensated for more sensitive operation. The default setting is REF.
Compenstate natural unbalance	• - • Comp	-	When activated while the line is energized, the currently present calculated residual current is compensated to 0. This compensation only has an effect in the CED mode.

Operating characteristics

The current-dependent pick-up and activation of the function are controlled by setting parameters, which define the current calculating method used as well as the operating characteristics.

Setting group selection controls the operating characteristics of the function, i.e. the user or user-defined logic can change function parameters while the function is running.

Table. 4.4.9 - 107. Pick-up settings.

Name	Range	Step	Default	Description
I0 Input	• I01 • I02	-	I01	Selection of the used residual current measurement input.
I0 Direction	• Add • Subtract	-	Add	Differential current calculation mode. This matches the directions of the calculated and measured residual currents to the application. The default setting (Add) means that I0Calc + I01 or I0Calc + I02 in a through fault yields no differential current. See figures below for connection examples.
Bias current calculation	• Residual current (3I0 + I0Calc)/2 • Maximum (Phase and I0 max)	-	Residual current	Selection of the bias current calculation. Differential characteristics biasing can use either the calculated residual current averages or the maximum of all measured currents. The residual current mode is more sensitive while the maximum current is coarser.
I0d> pick-up	0.01…50.00% (of I_n)	0.01%	10%	Setting for basic sensitivity of the differential characteristics.
Turnpoint 1	0.01…50.00×I_n	0.01×I_n	1.00×I_n	Setting for first turn point in the bias axe of the differential characteristics.
Slope 1	0.01…150.00%	0.01%	10.00%	Setting for the first slope of the differential characteristics.
Turnpoint 2	0.01…50.00×I_n	0.01×I_n	3.00×I_n	Setting for second turn point in the bias axe of the differential characteristics.
Slope 2	0.01…250.00%	0.01%	40.00%	Setting for the second slope of the differential characteristics.

© Arcteq Relays Ltd
IM00021

Figure. 4.4.9 - 56. "I0 direction" parameter must be set to "Subtract" when current transformers are facing the same direction.

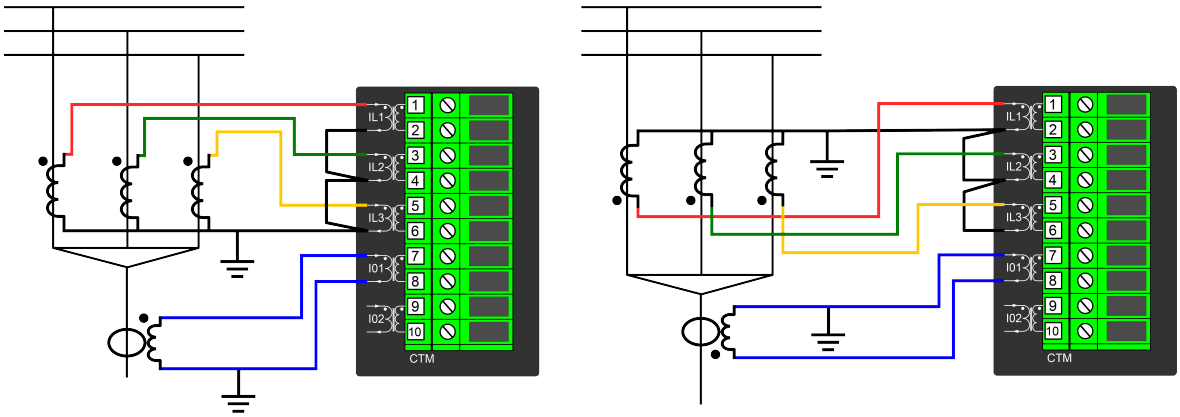

Figure. 4.4.9 - 57. "I0 direction" parameter must be set to "Add" when current transformers are facing each other or away from each other.

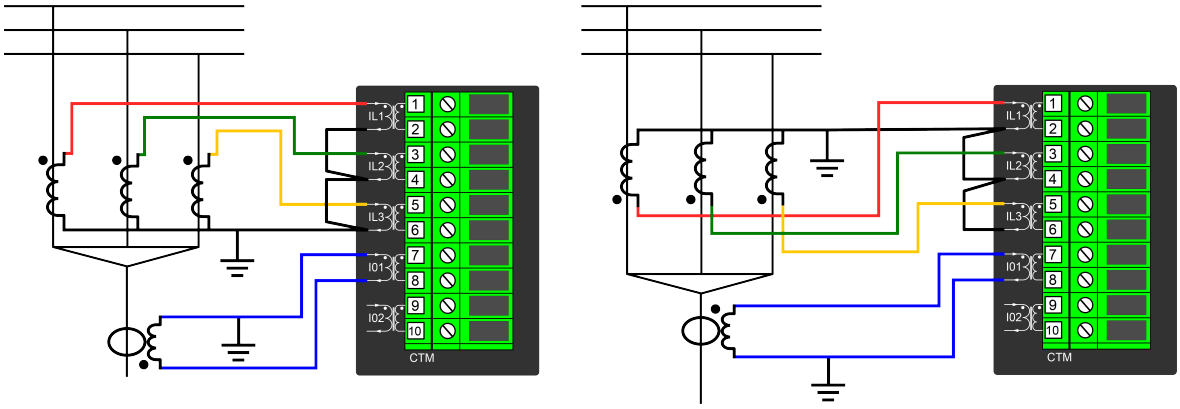

The following figure presents the differential characteristics with default settings.

Figure. 4.4.9 - 58. Differential characteristics for the I0d> function with default settings.

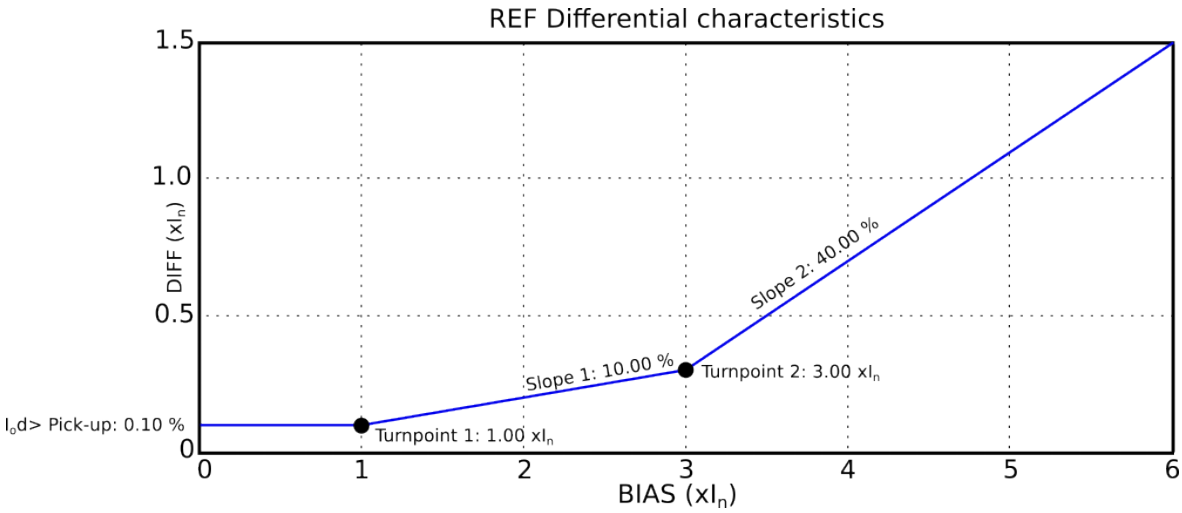

The equations for the differential characteristics are the following:

Figure. 4.4.9 - 59. Differential current (the calculation is based on user-selected inputs and direction).

$$I_{Diff+I01} = \left(\overline{IL1} + \overline{IL2} + \overline{IL3}\right) + \overline{I01}$$

$$I_{Diff-I01} = \left(\overline{IL1} + \overline{IL2} + \overline{IL3}\right) - \overline{I01}$$

$$I_{Diff+I02} = \left(\overline{IL1} + \overline{IL2} + \overline{IL3}\right) + \overline{I02}$$

$$I_{Diff-I02} = \left(\overline{IL1} + \overline{IL2} + \overline{IL3}\right) - \overline{I02}$$

Figure. 4.4.9 - 60. Bias current (the calculation is based on the user-selected mode).

$$I_{Bias\ average\ I01} = \frac{\left|\overline{IL1} + \overline{IL2} + \overline{IL3}\right| + \left|\overline{I01}\right|}{2}$$

$$I_{Bias\ average\ I02} = \frac{\left|\overline{IL1} + \overline{IL2} + \overline{IL3}\right| + \left|\overline{I02}\right|}{2}$$

$$I_{Bias\ \max I01} = MAX(|IL1|, |IL2|, |IL3|, |I01|)$$

$$I_{Bias\ \max I01} = MAX(|IL1|, |IL2|, |IL3|, |I02|)$$

Figure. 4.4.9 - 61. Characteristics settings.

$$Diff_{bias<TP1} = I0_{d>pick-up}$$

$$Diff_{biasTP1...TP2} = SL1 \times (Ix - TP1) + I0_{d>pick-up}$$

$$Diff_{bias>TP2} = SL2 \times (Ix - TP2) + SL1 \times (TP2 - TP1) + I0_{d>pick-up}$$

Read-only parameters

The function's *Info* page displays useful, real-time information on the state of the protection function. It is accessed either through the device's HMI display, or through the setting tool software when it is connected to the device and its Live Edit mode is active.

Table. 4.4.9 - 108. Information displayed by the function.

Name	Range	Description
I0d> LN behaviour	• On • Blocked • Test • Test/ Blocked • Off	Set mode of REF block. This parameter is visible only when *Allow setting of individual LN mode* is enabled in *General* menu.
I0d> condition	• Normal • Trip • Blocked	Displays the status of the protection function.

© Arcteq Relays Ltd
IM00021

Function blocking

The blocking signal is evaluated at the start of each program cycle. The blocking signals are connected to the function's dedicated input, which can be configured in the *IO → Blocking Input Control* tab of the function.

- If the blocking signal is not activated when the pick-up element activates, a TRIP signal is generated.
- If the blocking signal is active when the pick-up element activates, a BLOCKED signal is generated and the function does not process the situation further.
- When TRIP signal is already active and the blocking input signal becomes active, the TRIP signal is reset.

The blocking signal needs to reach the device minimum of 5 ms before the set operating delay has passed in order for the blocking to activate in time.

Application examples

The following figures present some typical applications for this function.

Figure. 4.4.9 - 62. Cable end differential with natural unbalance in the phase current measurement.

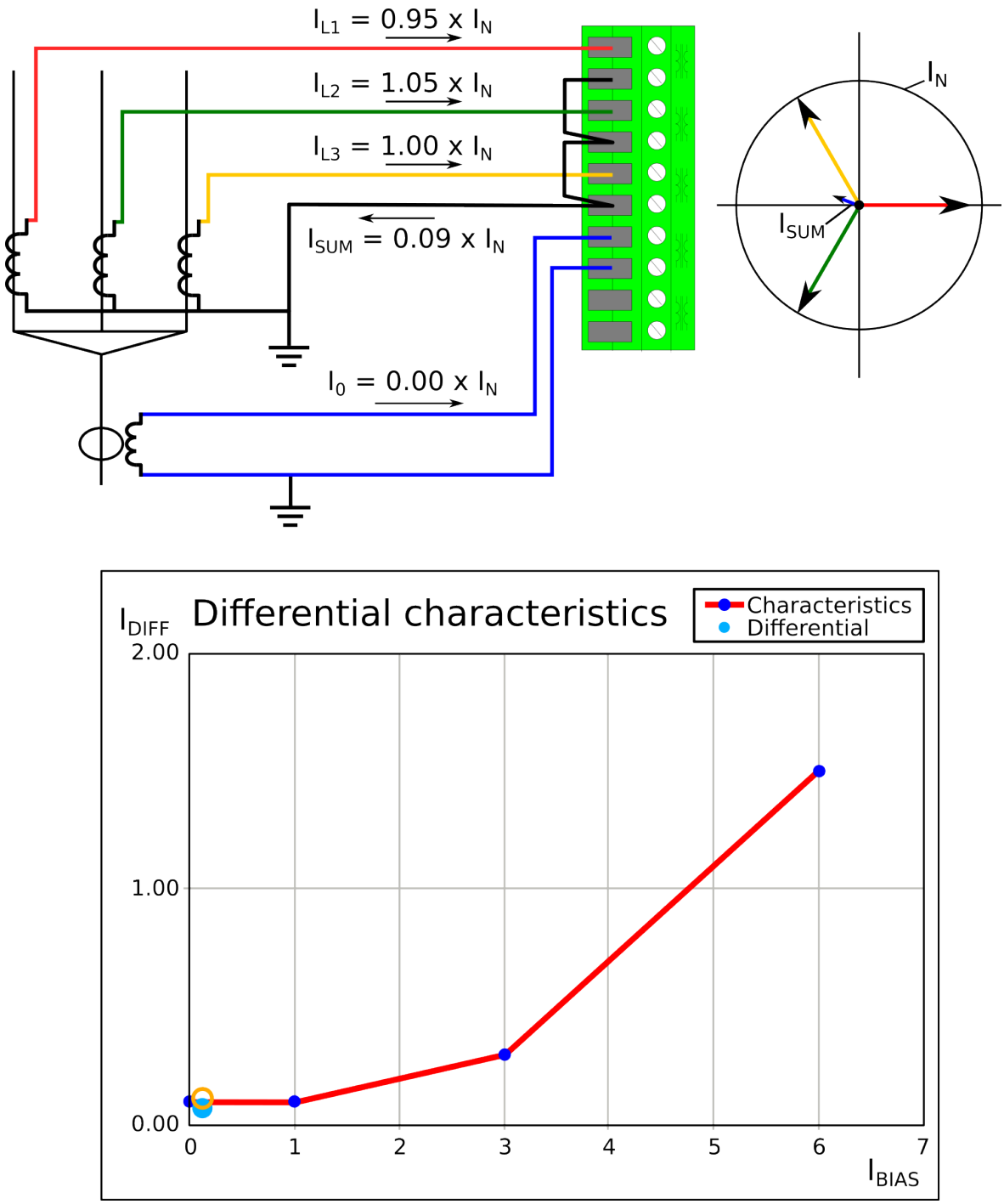

When calculating residual current from the phase currents, the natural unbalance can be around 10 % while the used CTs are still within the promised 5P class (which is probably the most common CT accuracy class). When the current natural unbalance is compensated in this situation, the differential settings may be set to be more sensitive and the natural unbalance does not, therefore, affect the calculation.

© Arcteq Relays Ltd

Figure. 4.4.9 - 63. Cable end differential when a fault occurs.

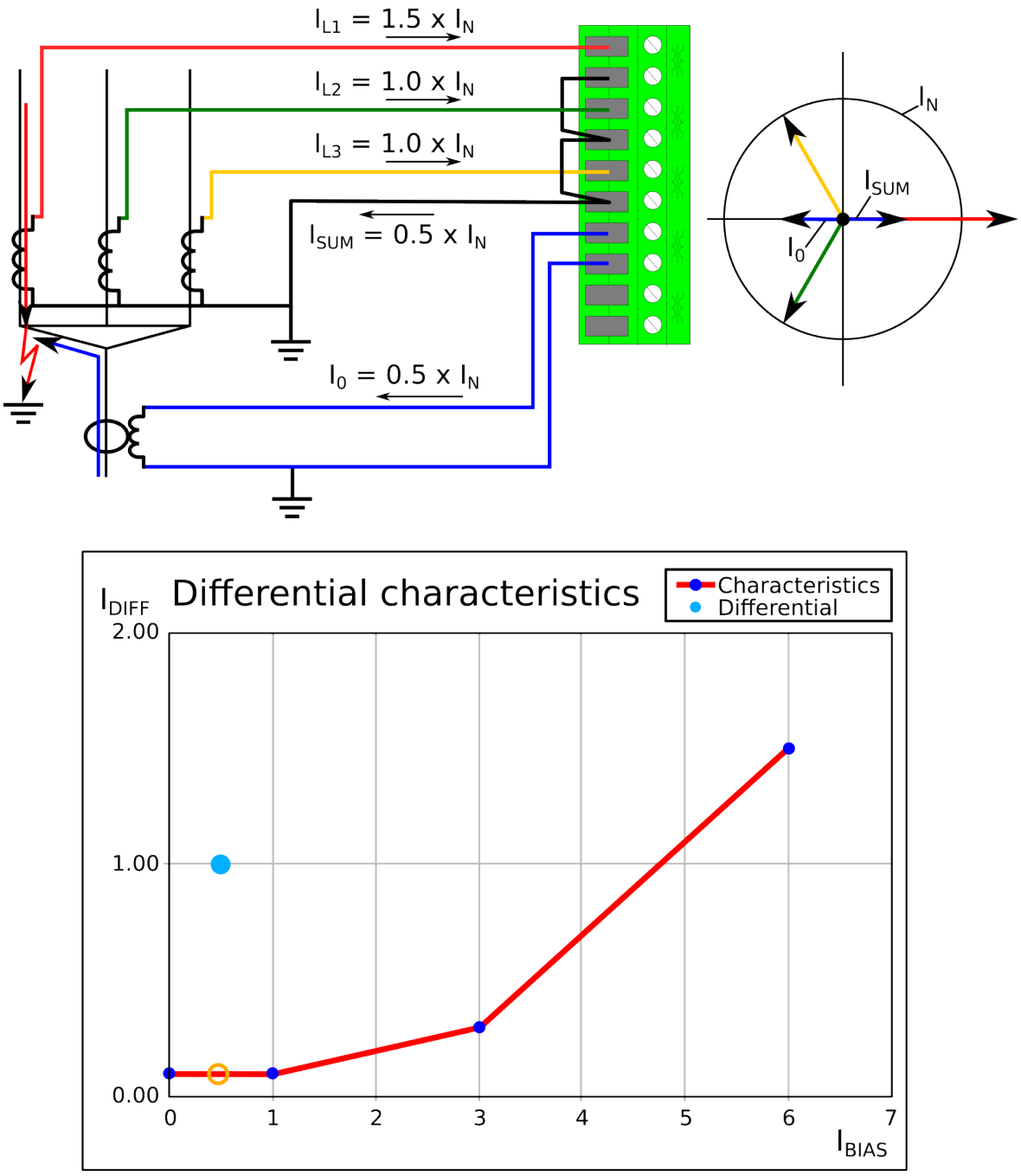

If a starting fault occurs in the cable end, the CED mode catches the difference between the ingoing and the outgoing residual currents. The resulting signal can be used for alarming or tripping purposes for the feeder with the failing cable end. The user can freely change both the settings and the sensitivity of the algorithm.

Restricted earth fault protection is usually used in the Y winding of a power transformer. This function is needed to prevent the main differential protection from being tripped by faults occurring outside the protection area; in some cases, the function has to be disabled or its sensitivity limited to catch earth faults inside the protection area. For this purpose, the restricted earth fault function is stable since it only monitors the side it is wired to, and compares the calculated and measured residual currents. During an outside earth fault the circulating residual current in the faulty phase winding does not cause a trip because the comparison of the measured starpoint current and the calculated residual current differential is close to zero.

Figure. 4.4.9 - 64. Restricted earth fault outside a Y winding transformer.

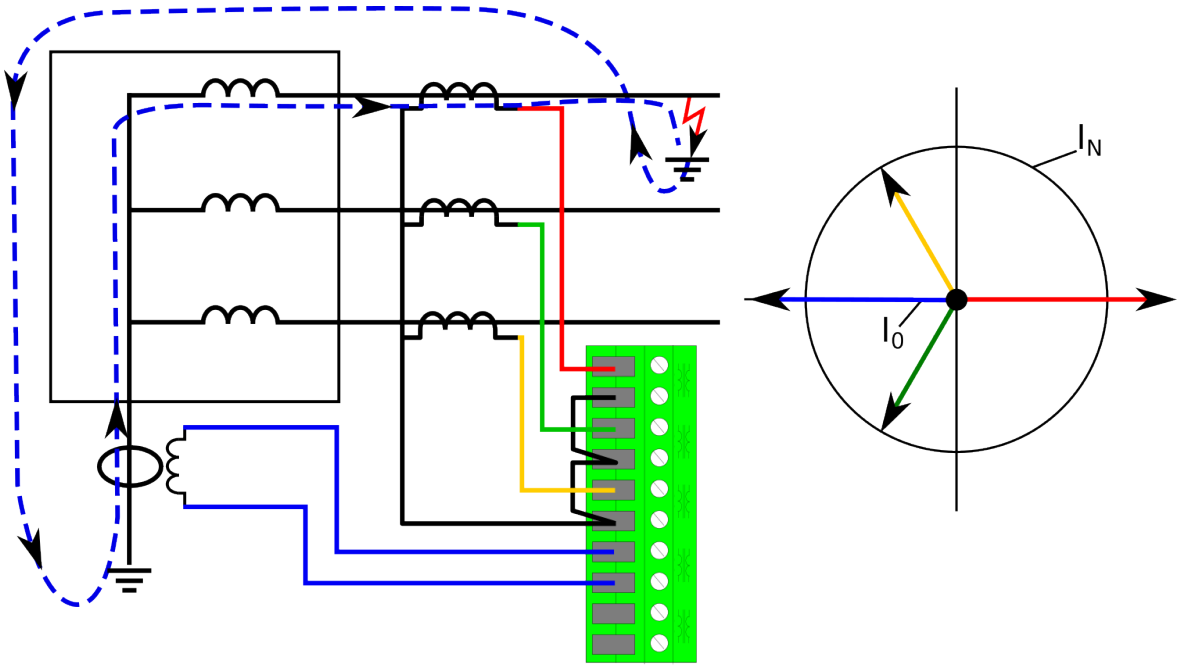

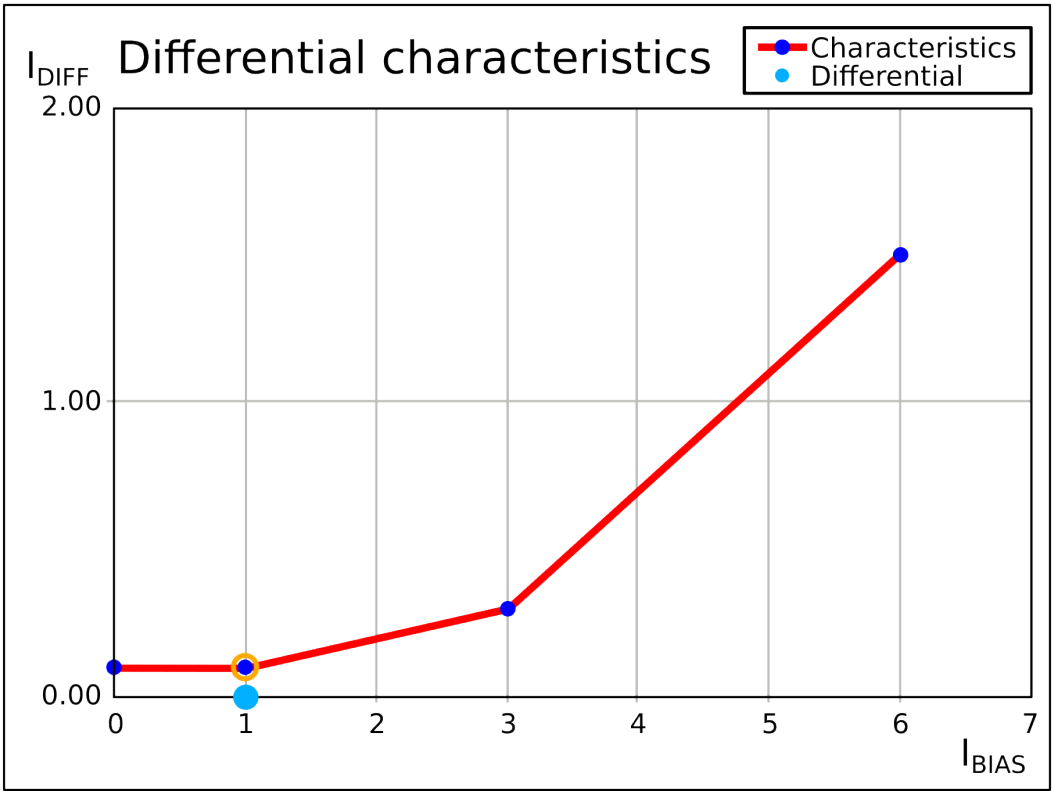

If the fault is located inside of the transformer and thus inside of the protection area, the function catches the fault with high sensitivity. Since the measured residual current now flows in the opposite direction than in the outside fault situation, the measured differential current is high.

© Arcteq Relays Ltd
IM00021

Figure. 4.4.9 - 65. Restricted earth fault inside a Y winding transformer.

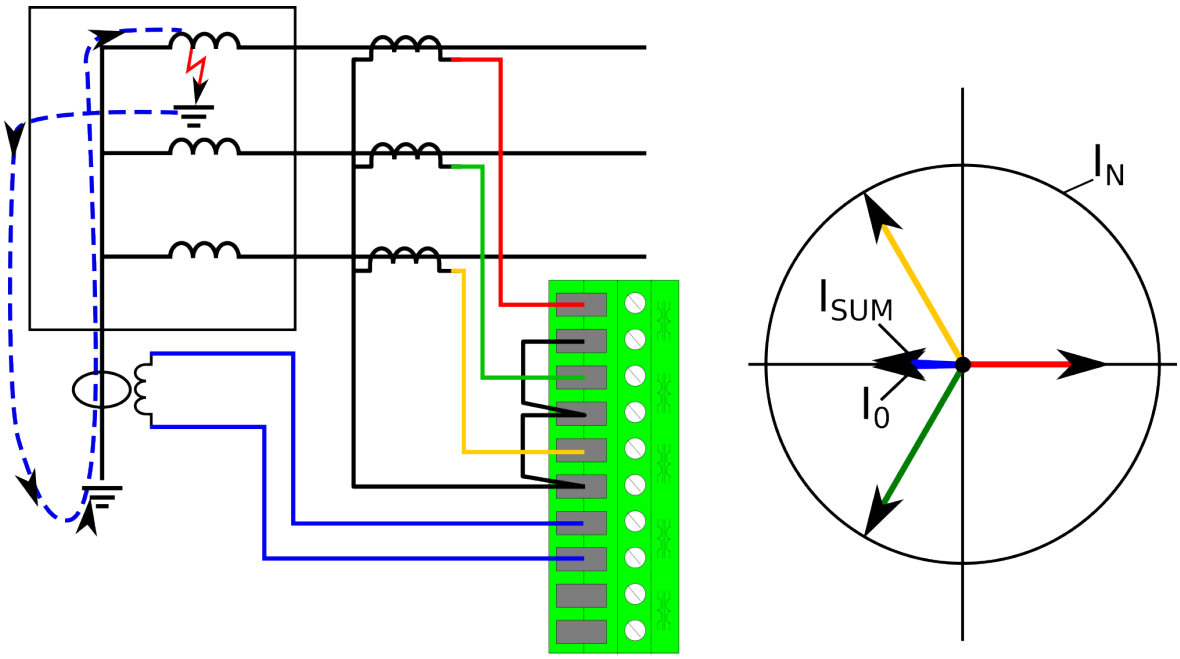

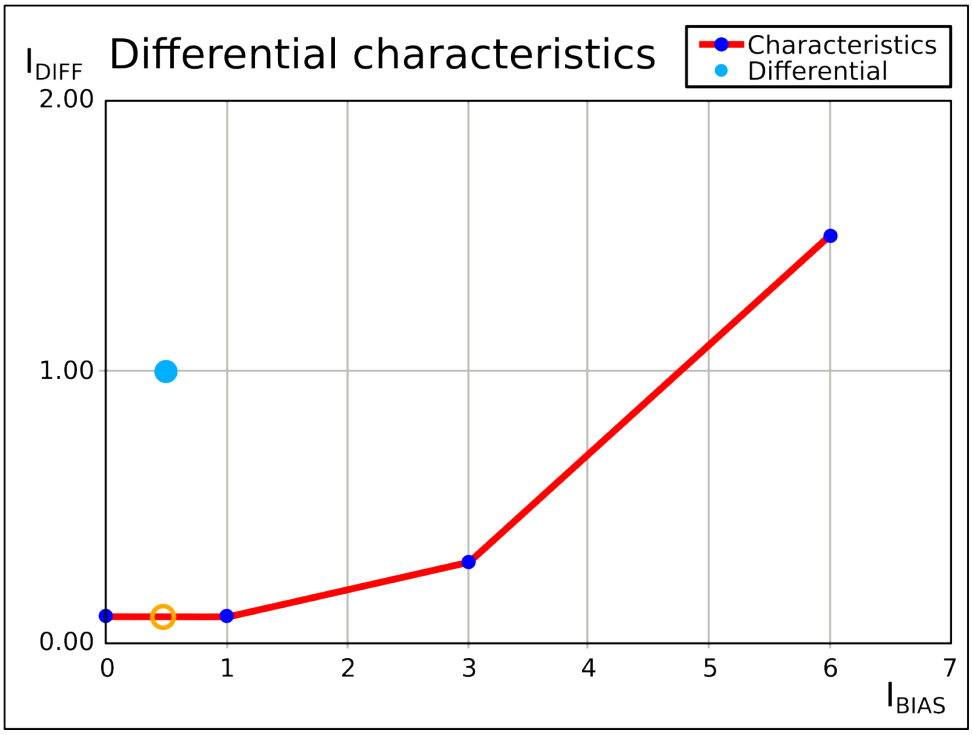

Events and registers

The restricted earth fault function (abbreviated "REF" in event block names) generates events and registers from the status changes in the events listed below. The user can select which event messages are stored in the main event buffer: ON, OFF, or both. The events triggered by the function are recorded with a time stamp.

The function's outputs can be used for direct I/O controlling and user logic programming. The function also provides a resettable cumulative counter for the TRIP and BLOCKED events.

Table. 4.4.9 - 109. Event messages.

Event block name	Event names
REF1	I0d> (87N) Trip ON/OFF
REF1	I0d> (87N) Block ON/OFF

The function registers its operation into the last twelve (12) time-stamped registers. The register of the function records the ON event process data for ACTIVATED, BLOCKED, etc. The table below presents the structure of the function's register content.

Table. 4.4.9 - 110. Register content.

Register	Description
Date and time	dd.mm.yyyy hh:mm:ss.mss
Event	Event name
Trigger currents	• Biascurrent • Diffcurrent • Characteristics diff
Maximum trigger currents	• Biascurrent max • Diffcurrent max • Characteristics diff max
Residual currents	• I0Calc • I0 meas
Setting group in use	Setting group 1...8 active

4.4.10 Overvoltage protection (U>; 59)

The overvoltage function is used for instant and time-delayed overvoltage protection. Devices with a voltage protection module has four (4) available stages of the function (U>, U>>, U>>>, U>>>>). The function constantly measures phase voltage magnitudes or line-to-line magnitudes.

© Arcteq Relays Ltd
IM00021

Figure. 4.4.10 - 66. Simplified function block diagram of the U> function.

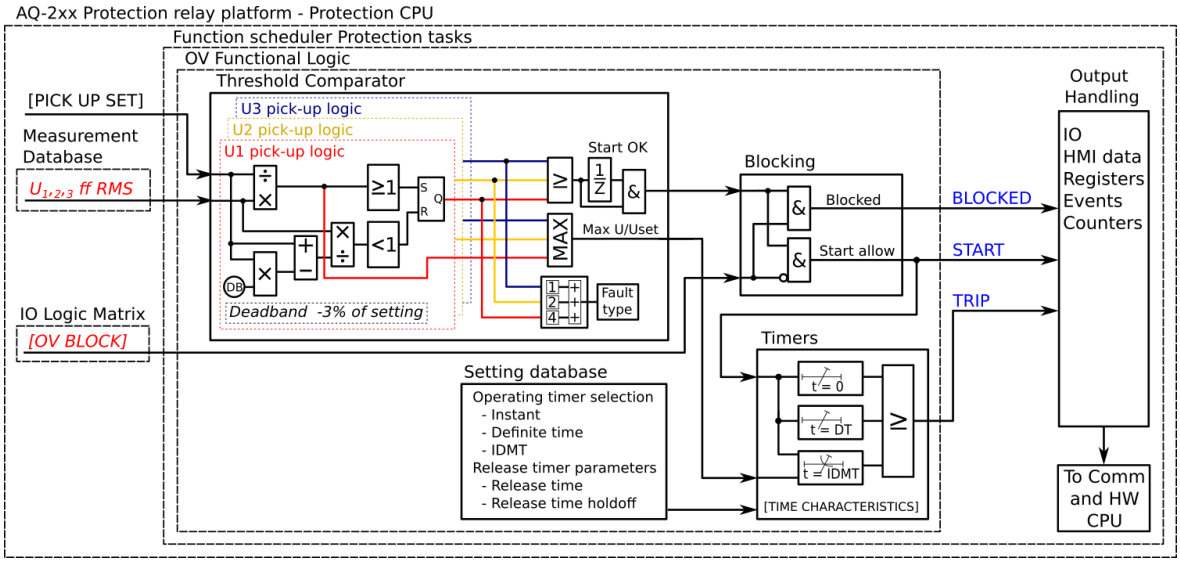

Measured input

The function block uses fundamental frequency component of line-to-line or line-to-neutral (as the user selects). If the protection is based on line-to-line voltage, overvoltage protection is not affected by earth faults in isolated or compensated networks.

Table. 4.4.10 - 111. Measurement input of the U> function.

Signal	Description
U_{L12}RMS	Fundamental frequency component of U_{L12}/V voltage measurement
U_{L23}RMS	Fundamental frequency component of U_{L23}/V voltage measurement
U_{L31}RMS	Fundamental frequency component of U_{L31}/V voltage measurement
U_{L1}RMS	Fundamental frequency component of U_{L1}/V voltage measurement
U_{L2}RMS	Fundamental frequency component of U_{L2}/V voltage measurement
U_{L3}RMS	Fundamental frequency component of U_{L3}/V voltage measurement

Table. 4.4.10 - 112. Measured magnitude selection settings.

Name	Range	Default	Description
Measured magnitude	• P-P voltages • P-E voltages • U3 input (2LL-U3SS) • U4 input (SS)	P-P voltages	Selection of phase-to-phase or phase-to-earth voltages. Additionally, the U3 or U4 input can be assigned as the voltage channel to be supervised.

Figure. 4.4.10 - 67. Selectable measurement magnitudes with 3LN+U4 VT connection.

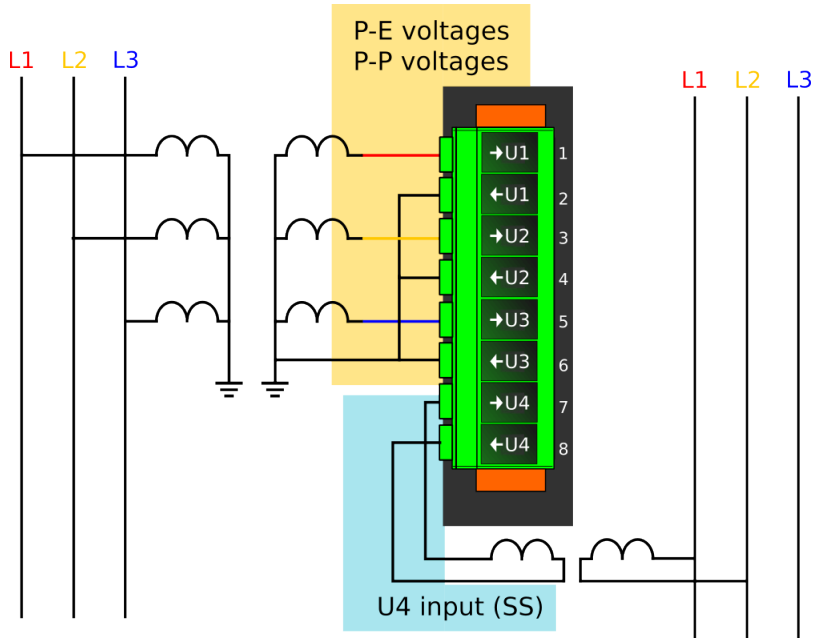

Figure. 4.4.10 - 68. Selectable measurement magnitudes with 3LL+U4 VT connection (P-E voltages not available without residual voltage).

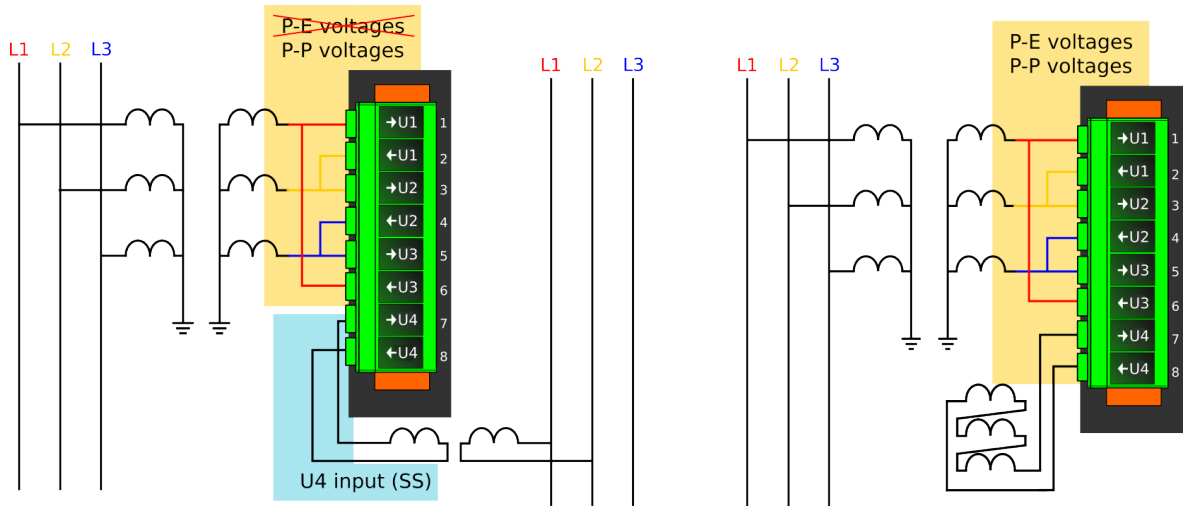

© Arcteq Relays Ltd
IM00021

Figure. 4.4.10 - 69. Selectable measurement magnitudes with 2LL+U3+U4 VT connection (P-E voltages not available without residual voltage).

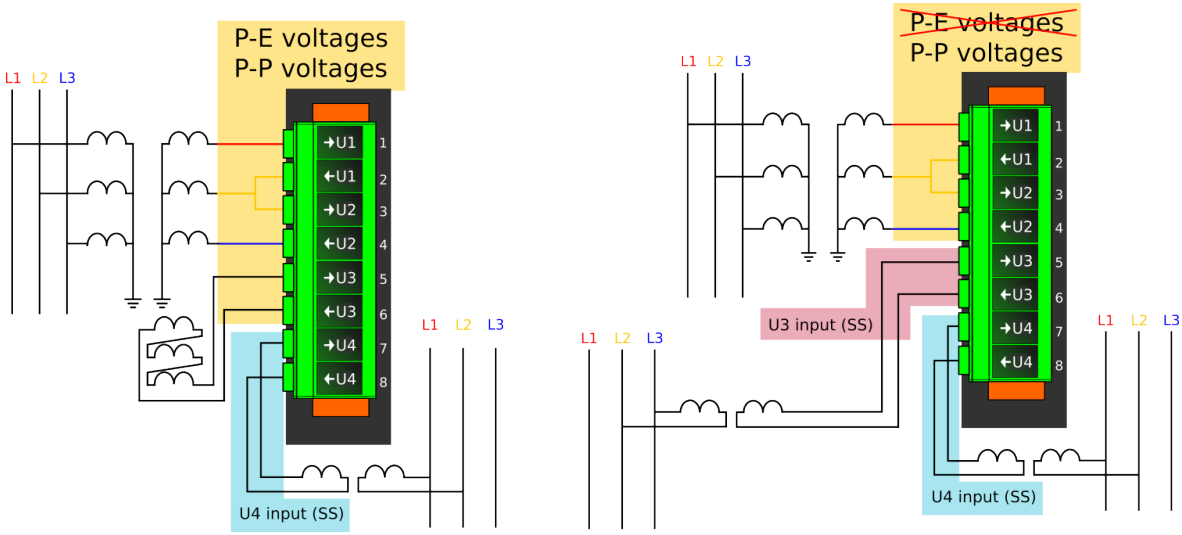

P-P Voltages and *P-E Voltages* selections follow phase-to-neutral or phase-to-phase voltages in the first three voltage channels (or two first voltage channels in the 2LL+U3+U4 mode). *U4 input* selection follows the voltage in Channel 4. *U3Input* selection only follows the voltage in Channel 3 if the 2LL+U3+U4 mode is in use.

General settings

The following general settings define the general behavior of the function. These settings are static i.e. it is not possible to change them by editing the setting group.

Table. 4.4.10 - 113. General settings of the function.

Name	Range	Default	Description
U> LN mode	• On • Blocked • Test • Test/ Blocked • Off	On	Set mode of OV block. This parameter is visible only when *Allow setting of individual LN mode* is enabled in *General* menu.
U> force status to	• Normal • Start • Trip • Blocked	Normal	Force the status of the function. Visible only when *Enable stage forcing* parameter is enabled in *General* menu.

Pick-up settings

The U_{set} setting parameter controls the pick-up of the U> function. This defines the maximum allowed measured voltage before action from the function. The function constantly calculates the ratio between the U_{set} and the measured magnitude (U_m) for each of the three voltages. The reset ratio of 97 % is built into the function and is always relative to the U_{set} value. The setting value is common for all measured amplitudes, and when the U_m exceeds the U_{set} value (in single, dual or all voltages) it triggers the pick-up operation of the function.

Setting group selection controls the operating characteristics of the function, i.e. the user or user-defined logic can change function parameters while the function is running.

Table. 4.4.10 - 114. Pick-up settings.

Name	Range	Step	Default	Description
Operation mode	• 1 voltage • 2 voltages • 3 voltages	-	1 voltage	Pick-up criteria selection
U_{set}	0.01…250.00%U_n	0.01%U_n	105%U_n	Pick-up setting

Read-only parameters

The function's *Info* page displays useful, real-time information on the state of the protection function. It is accessed either through the device's HMI display, or through the setting tool software when it is connected to the device and its Live Edit mode is active.

Table. 4.4.10 - 115. Information displayed by the function.

Name	Range	Step	Description
U> LN behaviour	• On • Blocked • Test • Test/Blocked • Off	-	Displays the mode of OV block. This parameter is visible only when *Allow setting of individual LN mode* is enabled in *General* menu.
U< pick-up setting	0.0...1 000 000.0V	0.1V	The primary voltage required for tripping. The displayed pick-up voltage level depends on the pick-up setting and the voltage transformer settings.
Expected operating time	0.000...1800.000s	0.005s	Displays the expected operating time when a fault occurs. When IDMT mode is used, the expected operating time depends on the measured voltage value. If the measured voltage changes during a fault, the expected operating time changes accordingly.
Time remaining to trip	-1800.000...1800.000s	0.005s	When the function has detected a fault and counts down time towards a trip, this displays how much time is left before tripping occurs.
$U_{A(B)\,meas}/U_{set}$ at the moment	0.00...1250.00U_m/U_{set}	0.01U_m/U_{set}	The ratio between U_A or U_{AB} voltage and the pick-up value.
$U_{B(c)\,meas}/U_{set}$ at the moment	0.00...1250.00U_m/U_{set}	0.01U_m/U_{set}	The ratio between U_B or U_{BC} voltage and the pick-up value.
$U_{C(A)\,meas}/U_{set}$ at the moment	0.00...1250.00U_m/U_{set}	0.01U_m/U_{set}	The ratio between U_C or U_{CA} voltage and the pick-up value.
U_{meas}/U_{set} at the moment	0.00...1250.00U_m/U_{set}	0.01U_m/U_{set}	The ratio between the measured voltage and the pick-up value.

© Arcteq Relays Ltd
IM00021

Function blocking

The blocking signal is evaluated at the start of each program cycle. The blocking signals are connected to the function's dedicated input, which can be configured in the *IO → Blocking Input Control* tab of the function.

- When the pick-up element activates and the blocking signal is not active, a START signal is generated and the function starts or continues the trip-time countdown.
- When the pick-up element activates and the blocking input signal is active, a BLOCKED signal is generated, and the function does not process the event further.
- When START signal is already active and the blocking input signal becomes active, the START signal is reset and BLOCKED signal is generated. The release-time characteristics are processed as if the fault condition had been cleared.

The blocking signal needs to reach the device minimum of 5 ms before the set operating delay has passed in order for the blocking to activate in time.

Operating time characteristics for trip and reset

The operating timers' behavior during a function can be set for TRIP signal and also for the release of the function in case the pick-up element is reset before the trip time has been reached. There are three basic operating modes available for the function:

- Instant operation: gives the TRIP signal with no additional time delay simultaneously with the START signal.
- Definite time operation (DT): gives the TRIP signal after a user-defined time delay regardless of the measured voltage as long as the voltage is above the U_{set} value and thus the pick-up element is active (independent time characteristics).
- Inverse definite minimum time (IDMT): gives the TRIP signal after a time which is in relation to the set pick-up voltage U_{set} and the measured voltage U_m (dependent time characteristics).

The IDMT function follows this formula:

$$t = \frac{k}{\left(\frac{Um}{Us}\right)^{a} - 1}$$

Where:

- t = operating time
- k = time dial setting
- U_m = measured voltage
- U_s = pick-up setting
- a = IDMT Multiplier setting

The following table presents the setting parameters for the function's time characteristics.

Table. 4.4.10 - 116. Setting parameters for operating time characteristics.

Name	Range	Step	Default	Description
Delay type	• DT • IDMT	-	DT	Selection of the delay type time counter. The selection possibilities are dependent (IDMT, Inverse Definite Minimum Time) and independent (DT, Definite Time) characteristics.

Name	Range	Step	Default	Description
Definite operating time delay	0.000…800.000s	0.005s	0.040s	Definite time operating delay. The setting is active and visible when DT is the selected delay type. When set to 0.000 s, the stage operates as instant stage without added delay. When the parameter is set to 0.005...1800 s, the stage operates as independent delayed.
Time dial setting k	0.01…60.00s	0.01s	0.05s	This setting is active and visible when IDMT is the selected delay type. Time dial/multiplier setting for IDMT characteristics.
IDMT Multiplier	0.01…25.00s	0.01s	1.00s	This setting is active and visible when IDMT is the selected delay type. IDMT time multiplier in the U_m/U_{set} power.

Table. 4.4.10 - 117. Setting parameters for reset time characteristics.

Name	Range	Step	Default	Description
Release time delay	0.000…150.000s	0.005s	0.06s	Resetting time. The time allowed between pick-ups if the pick-up has not led to a trip operation. During this time the START signal is held on for the timers if the delayed pick-up release is active.
Delayed pick-up release	• No • Yes	-	Yes	Resetting characteristics selection either as time-delayed or as instant after the pick-up element is released. If activated the START signal is reset after the set release time delay.
Time calc reset after release time	• No • Yes	-	Yes	Operating timer resetting characteristics selection. When active, the operating time counter is reset after a set release time if the pick-up element is not activated during this time. When disabled, the operating time counter is reset directly after the pick-up element is reset.
Continue time calculation during release time	• No • Yes	-	No	Time calculation characteristics selection. If activated, the operating time counter is continuing until a set release time has passed even if the pick-up element is reset.

Events and registers

The overvoltage function (abbreviated "OV" in event block names) generates events and registers from the status changes in the events listed below. The user can select which event messages are stored in the main event buffer: ON, OFF, or both. The events triggered by the function are recorded with a time stamp.

The function's outputs can be used for direct I/O controlling and user logic programming. The function also provides a resettable cumulative counter for the START, TRIP and BLOCKED events.

The function offers four (4) independent stages; the events are segregated for each stage operation.

© Arcteq Relays Ltd
IM00021

Table. 4.4.10 - 118. Event messages.

Event block name	Event names
OV1...OV4	Start ON/OFF
OV1...OV4	Trip ON/OFF
OV1...OV4	Block ON/OFF

The function registers its operation into the last twelve (12) time-stamped registers; this information is available for all provided instances separately. The register of the function records the ON event process data for START, TRIP or BLOCKED. The table below presents the structure of the function's register content.

Table. 4.4.10 - 119. Register content.

Register	Description
Date and time	dd.mm.yyyy hh:mm:ss.mss
Event	Event name
Fault type	L1-G…L1-L2-L3
Pre-trigger voltage	Start/Trip -20ms voltage
Pre-fault voltage	Start -200ms voltage
Trip time remaining	0 ms...1800s
Used SG	Setting group 1...8 active

4.4.11 Undervoltage protection (U<; 27)

The undervoltage function is used for instant and time-delayed undervoltage protection. Devices with a voltage protection module has four (4) available stages of the function (U>, U>>, U>>>, U>>>>). The function constantly measures phase voltage magnitudes or line-to-line voltage magnitudes. Undervoltage protection has two blocking stages: internal blocking (based on voltage measurement and low voltage), or external blocking (e.g. during voltage transformer fuse failure).

Figure. 4.4.11 - 70. Simplified function block diagram of the U< function.

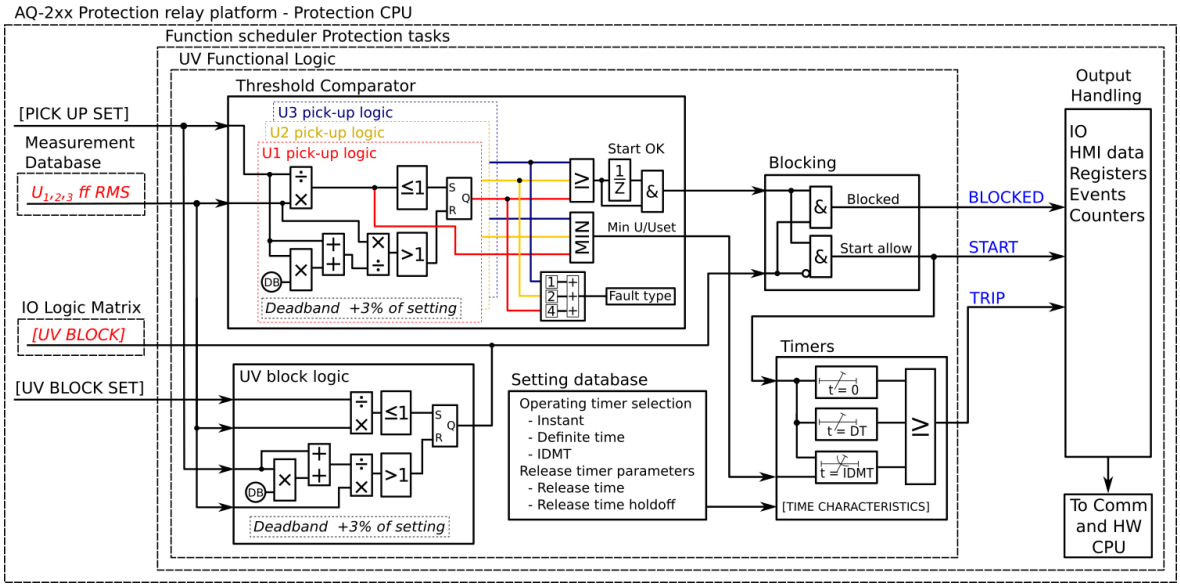

Measured input

The function block uses fundamental frequency component of line-to-line or line-to-neutral (as the user selects). If the protection is based on line-to-line voltage, undervoltage protection is not affected by earth faults in isolated or compensated networks.

Table. 4.4.11 - 120. Measurement input of the U> function.

Signal	Description
U_{L12}RMS	Fundamental frequency component of U_{L12}/V voltage measurement
U_{L23}RMS	Fundamental frequency component of U_{L23}/V voltage measurement
U_{L31}RMS	Fundamental frequency component of U_{L31}/V voltage measurement
U_{L1}RMS	Fundamental frequency component of U_{L1}/V voltage measurement
U_{L2}RMS	Fundamental frequency component of U_{L2}/V voltage measurement
U_{L3}RMS	Fundamental frequency component of U_{L3}/V voltage measurement

Table. 4.4.11 - 121. Measured magnitude selection settings.

Name	Range	Default	Description
Measured magnitude	• P-P voltages • P-E voltages • U3 input (2LL-U3SS) • U4 input (SS)	P-P voltages	Selection of P-P or P-E voltages. Additionally, the U3 or U4 input can be assigned as the voltage channel to be supervised.

© Arcteq Relays Ltd
IM00021

Figure. 4.4.11 - 71. Selectable measurement magnitudes with 3LN+U4 VT connection.

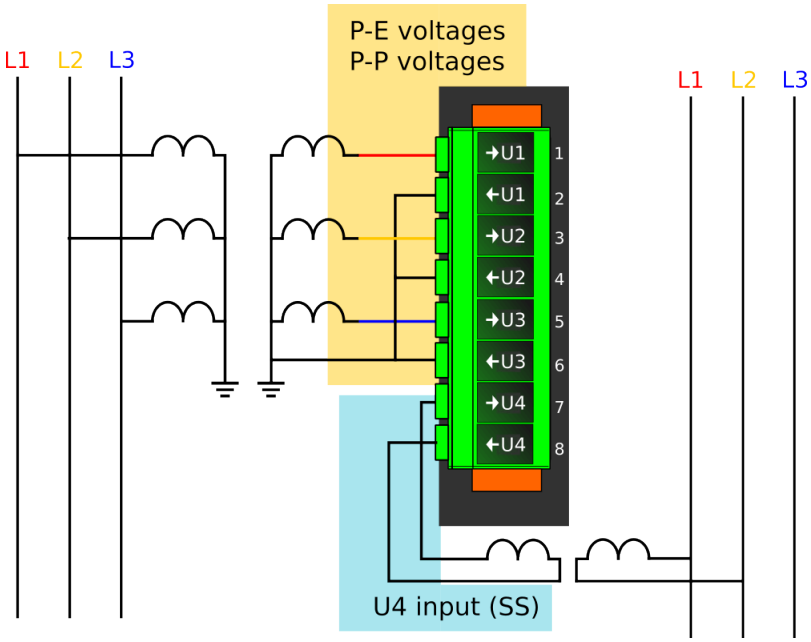

Figure. 4.4.11 - 72. Selectable measurement magnitudes with 3LL+U4 VT connection (P-E voltages not available without residual voltage).

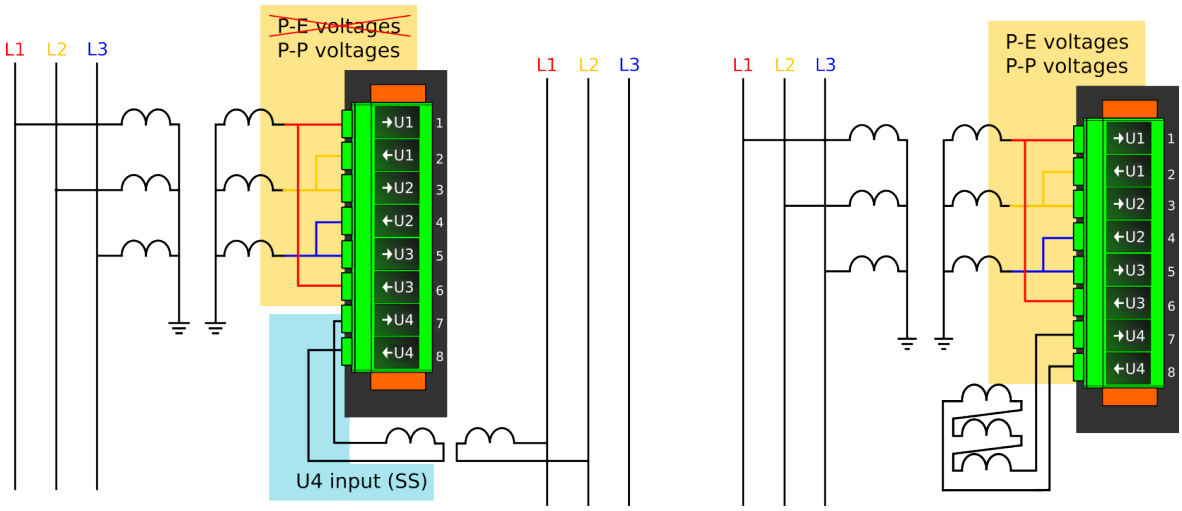

Figure. 4.4.11 - 73. Selectable measurement magnitudes with 2LL+U4 VT connection (P-E voltages not available without residual voltage).

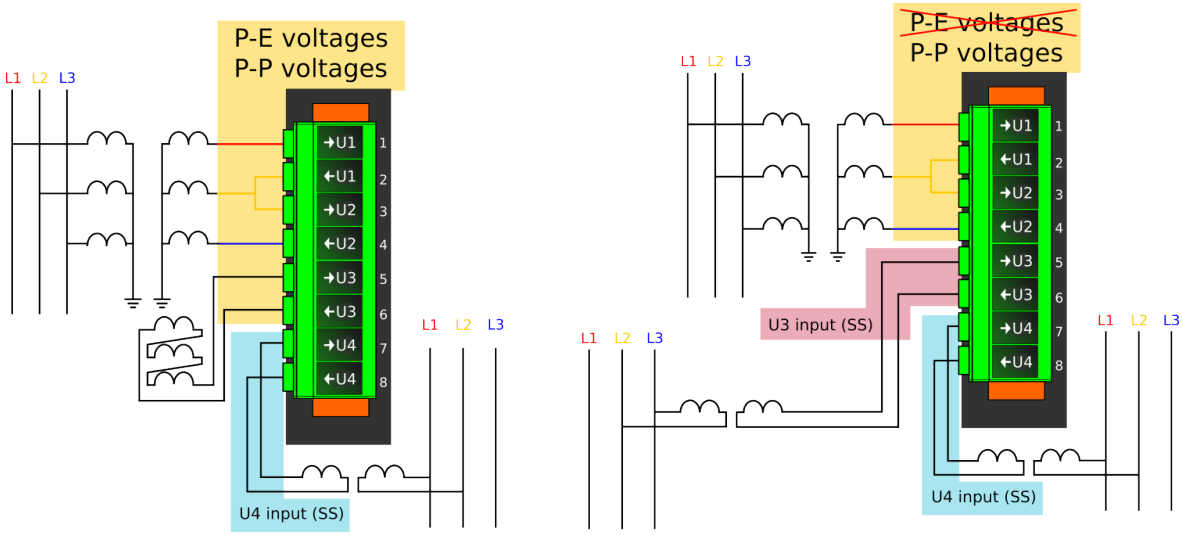

P-P Voltages and *P-E Voltages* selections follow phase-to-neutral or phase-to-phase voltages in the first three voltage channels (or two first voltage channels in the 2LL+U3+U4 mode). *U4 input* selection follows the voltage in Channel 4. *U3Input* selection only follows the voltage in Channel 3 if the 2LL+U3+U4 mode is in use.

General settings

The following general settings define the general behavior of the function. These settings are static i.e. it is not possible to change them by editing the setting group.

Table. 4.4.11 - 122. General settings of the function.

Name	Range	Default	Description
U< LN mode	• On • Blocked • Test • Test/ Blocked • Off	On	Set mode of UV block. This parameter is visible only when *Allow setting of individual LN mode* is enabled in *General* menu.
U< force status to	• Normal • Start • Trip • Blocked	Normal	Force the status of the function. Visible only when *Enable stage forcing* parameter is enabled in *General* menu.

Pick-up settings

The U_{set} setting parameter controls the pick-up of the U< function. This defines the minimum allowed measured voltage before action from the function. The function constantly calculates the ratio between the U_{set} and the measured magnitude (U_m) for each of the three voltages. The reset ratio of 103 % is built into the function and is always relative to the U_{set} value. The setting value is common for all measured amplitudes, and when the U_m exceeds the U_{set} value (in single, dual or all voltages) it triggers the pick-up operation of the function.

Setting group selection controls the operating characteristics of the function, i.e. the user or user-defined logic can change function parameters while the function is running.

© Arcteq Relays Ltd
IM00021

Table. 4.4.11 - 123. Pick-up settings.

Name	Range	Step	Default	Description
U_{set}	0.00…120.00%U_n	0.01%U_n	60%U_n	Pick-up setting
U Block setting	0.00…100.00%U_n	0.01%U_n	10%U_n	Block setting. If set to zero, blocking is not in use. The operation is explained in the next chapter.

Using *Block setting* to prevent nuisance trips

It is recommended to use the *Block setting* parameter to prevent the device from tripping in a situation where the network is de-energized. When the measured voltage drops below the set value, the device does not give a tripping signal. If the measured voltage has dropped below the *Block setting* parameter, the blocking continues until all of the line voltages have increased above the U< pick-up setting. Please see the image below for a visualization of this function. If the block level is set to zero (0), blocking is not in use.

Figure. 4.4.11 - 74. Example of the block setting operation.

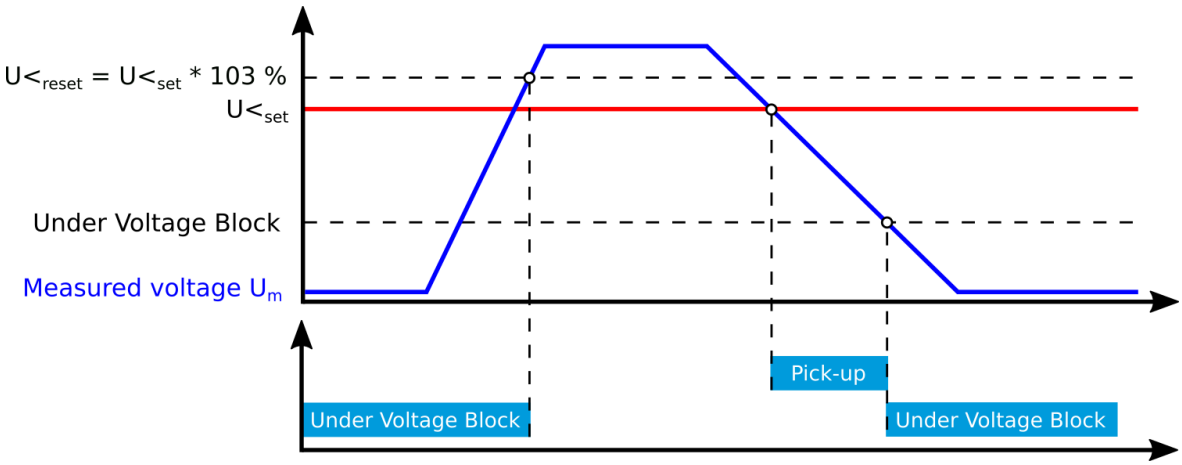

Read-only parameters

The function's *Info* page displays useful, real-time information on the state of the protection function. It is accessed either through the device's HMI display, or through the setting tool software when it is connected to the device and its Live Edit mode is active.

Table. 4.4.11 - 124. Information displayed by the function.

Name	Range	Step	Description
U< LN behaviour	• On • Blocked • Test • Test/Blocked • Off	-	Displays the mode of UV block. This parameter is visible only when *Allow setting of individual LN mode* is enabled in *General* menu.
U< pick-up setting	0.0...1 000 000.0V	0.1V	The primary voltage required for tripping. The displayed pick-up voltage level depends on the pick-up setting and the voltage transformer settings.

Name	Range	Step	Description
U< block setting	0.0...1 000 000.0V	0.1V	The primary voltage level required for trip blocking. If the measured voltage is below this value, the network is considered de-energized and the function will not trip. To deactivate the blocking the measured voltage must exceed the pick-up setting value.
Expected operating time	0.000...1800.000s	0.005s	Displays the expected operating time when a fault occurs. When IDMT mode is used, the expected operating time depends on the measured voltage value. If the measured voltage changes during a fault, the expected operating time changes accordingly.
Time remaining to trip	-1800.000...1800.000s	0.005s	When the function has detected a fault and counts down time towards a trip, this displays how much time is left before tripping occurs.
$U_{A(B)\,meas}/U_{set}$ at the moment	0.00...1250.00U_m/U_{set}	0.01U_m/U_{set}	The ratio between U_A or U_{AB} voltage and the pick-up value.
$U_{B(c)\,meas}/U_{set}$ at the moment	0.00...1250.00U_m/U_{set}	0.01U_m/U_{set}	The ratio between U_B or U_{BC} voltage and the pick-up value.
$U_{C(A)\,meas}/U_{set}$ at the moment	0.00...1250.00U_m/U_{set}	0.01U_m/U_{set}	The ratio between U_C or U_{CA} voltage and the pick-up value.
U_{meas}/U_{set} at the moment	0.00...1250.00U_m/U_{set}	0.01U_m/U_{set}	The ratio between the lowest measured phase or line voltage and the pick-up value.

Function blocking

The blocking signal is evaluated at the start of each program cycle. The blocking signals are connected to the function's dedicated input, which can be configured in the *IO → Blocking Input Control* tab of the function.

- When the pick-up element activates and the blocking signal is not active, a START signal is generated and the function starts or continues the trip-time countdown.
- When the pick-up element activates and the blocking input signal is active, a BLOCKED signal is generated, and the function does not process the event further.
- When START signal is already active and the blocking input signal becomes active, the START signal is reset and BLOCKED signal is generated. The release-time characteristics are processed as if the fault condition had been cleared.

The blocking signal needs to reach the device minimum of 5 ms before the set operating delay has passed in order for the blocking to activate in time.

Operating time characteristics for trip and reset

The operating timers' behavior during a function can be set for TRIP signal and also for the release of the function in case the pick-up element is reset before the trip time has been reached. There are three basic operating modes available for the function:

© Arcteq Relays Ltd
IM00021

- Instant operation: gives the TRIP signal with no additional time delay simultaneously with the START signal.
- Definite time operation (DT): gives the TRIP signal after a user-defined time delay regardless of the measured voltage as long as the voltage is above the U_{set} value and thus the pick-up element is active (independent time characteristics).
- Inverse definite minimum time (IDMT): gives the TRIP signal after a time which is in relation to the set pick-up voltage U_{set} and the measured voltage U_m (dependent time characteristics).

The IDMT function follows this formula:

$$t = \frac{k}{1 - \left(\frac{Um}{Us}\right)^a}$$

Where:

- t = operating time
- k = time dial setting
- U_m = measured voltage
- U_s = pick-up setting
- a = IDMT multiplier setting

The following table presents the setting parameters for the function's time characteristics.

Table. 4.4.11 - 125. Setting parameters for operating time characteristics.

Name	Range	Step	Default	Description
Delay type	• DT • IDMT	-	DT	Selection of the delay type time counter. The selection possibilities are dependent (IDMT, Inverse Definite Minimum Time) and independent (DT, Definite Time) characteristics.
Definite operating time delay	0.000…1800.000s	0.005s	0.040s	Definite time operating delay. This setting is active and visible when DT is the selected delay type. When set to 0.000 s, the stage operates as instant stage without added delay. When the parameter is set to 0.005...1800 s, the stage operates as independent delayed.
Time dial setting k	0.01…60.00s	0.01s	0.05s	This setting is active and visible when IDMT is the selected delay type. Time dial/multiplier setting for IDMT characteristics.
IDMT Multiplier	0.01…25.00s	0.01s	1.00s	This setting is active and visible when IDMT is the selected delay type. IDMT time multiplier in the U_m/U_{set} power.

Table. 4.4.11 - 126. Setting parameters for reset time characteristics.

Name	Range	Step	Default	Description
Release time delay	0.000…150.000s	0.005s	0.06s	Resetting time. The time allowed between pick-ups if the pick-up has not led to a trip operation. During this time the START signal is held on for the timers if the delayed pick-up release is active.

Name	Range	Step	Default	Description
Delayed pick-up release	• No • Yes	-	Yes	Resetting characteristics selection, either time-delayed or instant after the pick-up element is released. If activated, the START signal is reset after a set release time delay.
Time calc reset after release time	• No • Yes	-	Yes	Operating timer resetting characteristics selection. When actived, the operating time counter is reset after a set release time if the pick-up element is not activated during this time. When disabled, the operating time counter is reset directly after the pick-up element reset.
Continue time calculation during release time	• No • Yes	-	No	Time calculation characteristics selection. If activated, the operating time counter continues until a set release time even when the pick-up element is reset.

Events and registers

The undervoltage function (abbreviated "UV" in event block names) generates events and registers from the status changes in the events listed below. The user can select which event messages are stored in the main event buffer: ON, OFF, or both. The events triggered by the function are recorded with a time stamp.

The function's outputs can be used for direct I/O controlling and user logic programming. The function also provides a resettable cumulative counter for the START, TRIP and BLOCKED events.

The function offers four (4) independent stages; the events are segregated for each stage operation.

Table. 4.4.11 - 127. Event messages.

Event block name	Event names
UV1...UV4	Start ON/OFF
UV1...UV4	Trip ON/OFF
UV1...UV4	Block ON/OFF
UV1...UV4	Undervoltage Block ON/OFF

The function registers its operation into the last twelve (12) time-stamped registers; this information is available for all provided instances separately. The register of the function records the ON event process data for START, TRIP or BLOCKED. The table below presents the structure of the function's register content.

Table. 4.4.11 - 128. Register content.

Register	Description
Date and time	dd.mm.yyyy hh:mm:ss.mss
Event	Event name
Fault type	A…A-B-C

© Arcteq Relays Ltd
IM00021

Register	Description
Pre-trigger voltage	Start/Trip -20ms voltage
Fault voltage	Start/Trip voltage
Pre-fault voltage	Start -200ms voltage
Trip time remaining	0 ms...1800s
Used SG	Setting group 1...8 active

4.4.12 Neutral overvoltage protection (U0>; 59N)

The neutral overvoltage function is used for non-directional instant and time-delayed earth fault protection.

Below is the formula for symmetric component calculation (and therefore to zero sequence voltage calculation).

$$U0 = 1/3(U_{L1} + U_{L2} + U_{L3})$$

$$U_{L1...3} = \text{Line to neutral voltages}$$

Below are some examples of zero sequence calculation.

Figure. 4.4.12 - 75. Normal situation.

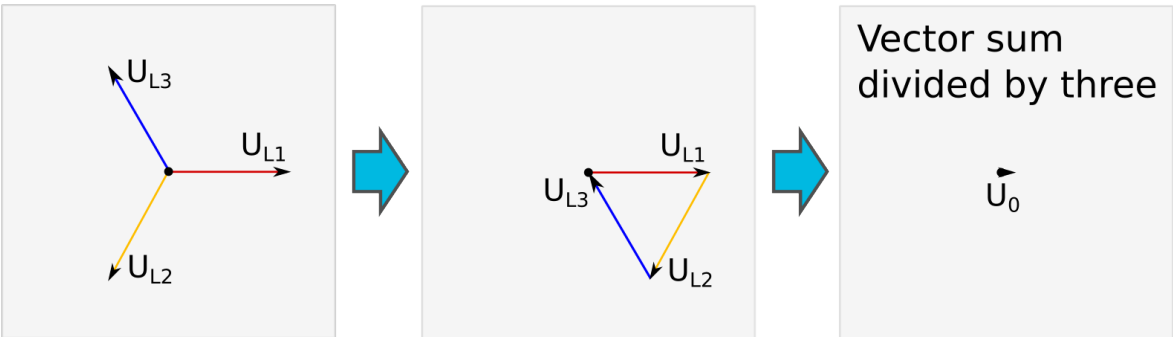

Figure. 4.4.12 - 76. Earth fault in isolated network.

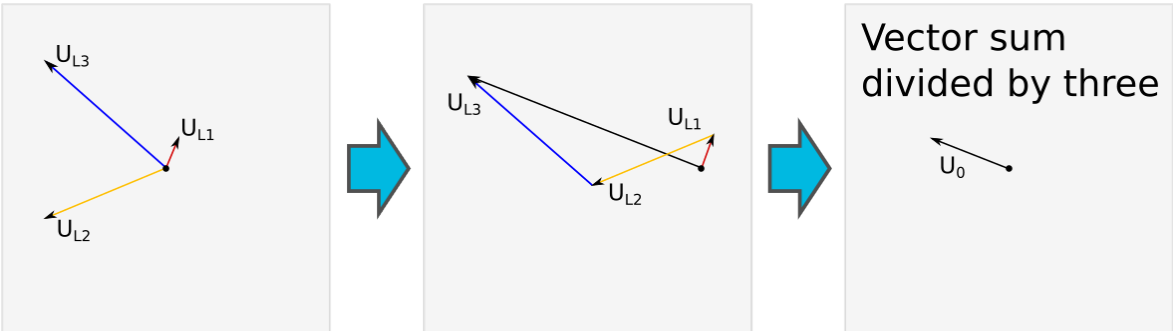

Figure. 4.4.12 - 77. Close-distance short-circuit between phases 1 and 3.

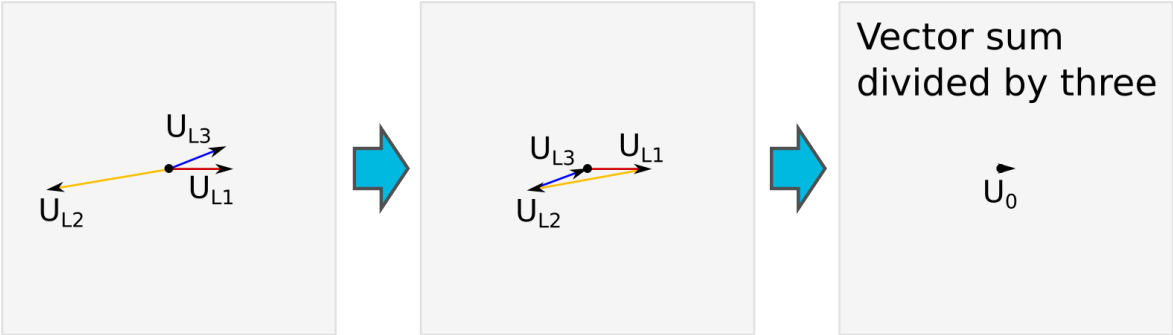

Figure. 4.4.12 - 78. Simplified function block diagram of the U0> function.

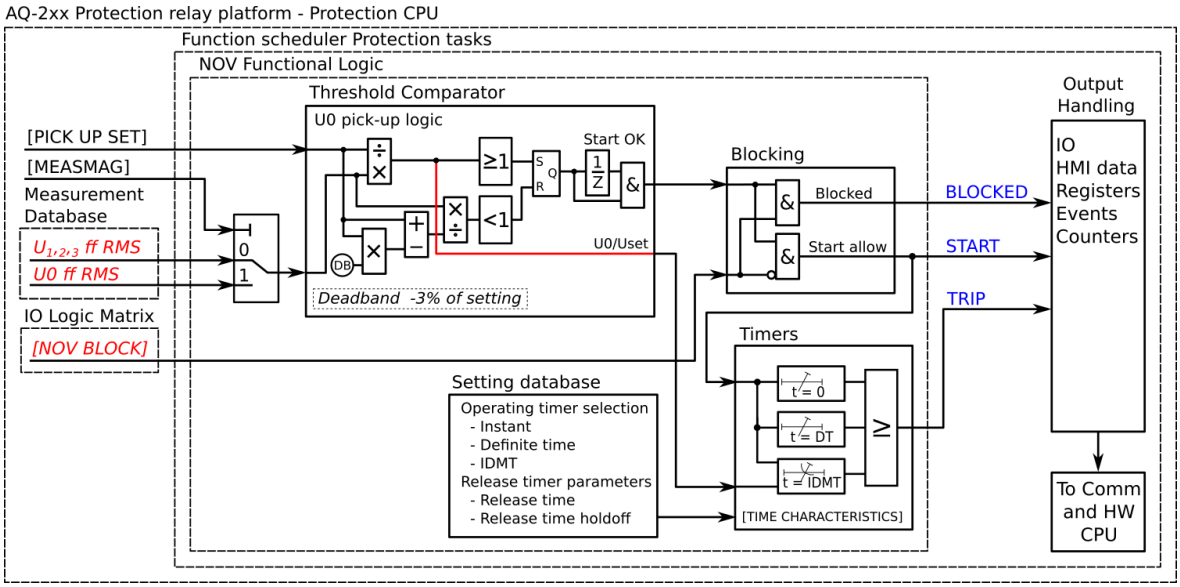

Measured input

The function block uses phase-to-neutral voltage magnitudes or calculated zero sequence component (as the user selects). Neutral overvoltage protection is scaled to line-to-line RMS level. When the line-to-line voltage of a system is 100 V in the secondary side, the earth fault is 100 % of the U_n and the calculated zero sequence voltage reaches 100/√3 V = 57.74 V.

The selection of the used measurement channel is made with a setting parameter.

Table. 4.4.12 - 129. Measurement inputs of the U0> function.

Signal	Description
U_0RMS	Fundamental frequency component of U0/V voltage measurement
U_{L1}RMS	Fundamental frequency component of U_{L1}/V voltage measurement
U_{L2}RMS	Fundamental frequency component of U_{L2}/V voltage measurement
U_{L3}RMS	Fundamental frequency component of U_{L3}/V voltage measurement

© Arcteq Relays Ltd
IM00021

General settings

The following general settings define the general behavior of the function. These settings are static i.e. it is not possible to change them by editing the setting group.

Table. 4.4.12 - 130. General settings of the function.

Name	Range	Default	Description
U0> LN mode	• On • Blocked • Test • Test/ Blocked • Off	On	Set mode of NOV block. This parameter is visible only when *Allow setting of individual LN mode* is enabled in *General* menu.
U0> force status to	• Normal • Start • Trip • Blocked	Normal	Force the status of the function. Visible only when *Enable stage forcing* parameter is enabled in *General* menu.
U0> meas input select	• Select • U0Calc • U3 Input • U4 Input	Select	Defines which available measured magnitude is used by the function. U0Calc calculates the voltage from phase voltages. Please note that U3 Input and U4 Input selections are available only if the channel has been set to U0 mode at *Measurements → Transformers → VT module*.

Pick-up settings

The U_{set} setting parameter controls the pick-up of the U0> function. This defines the maximum allowed measured voltage before action from the function. The function constantly calculates the ratio between the U_{set} and the measured magnitude (U_m) for neutral voltage. The reset ratio of 97 % is built into the function and is always relative to the U_{set} value. The setting value is common for all measured amplitudes, and when the U_m exceeds the U_{set} value it triggers the pick-up operation of the function.

Setting group selection controls the operating characteristics of the function, i.e. the user or user-defined logic can change function parameters while the function is running.

Table. 4.4.12 - 131. Pick-up settings.

Name	Range	Step	Default	Description
Pick-up setting U0set>	1.00…99.00%U_n	0.01%U_n	20.00%U_n	Pick-up setting

Read-only parameters

The function's *Info* page displays useful, real-time information on the state of the protection function. It is accessed either through the device's HMI display, or through the setting tool software when it is connected to the device and its Live Edit mode is active.

Name	Range	Step	Description
U0> LN mode behaviour	• On • Blocked • Test • Test/Blocked • Off	-	Displays the mode of NOV block. This parameter is visible only when *Allow setting of individual LN mode* is enabled in *General* menu.
U0> Measuring now	• No U0 avail! • U0Calc • U3 Input • U4 Input	-	Displays which voltage channel is used by the function. If no voltage channel has been selected the function defaults to calculated residual voltage if line-to-neutral voltages have been connected to device. If no channel is set to "U0" mode and line-to-line voltages are connected, no residual voltage is available and "No U0 avail!" will be displayed.
U0> Pick-up setting	0.0...1 000 000.0V	0.1V	Primary voltage required for tripping. The displayed pick-up voltage level depends on the chosen U0 measurement input selection, on the pick-up settings and on the voltage transformer settings.
Expected operating time	0.000...1800.000s	0.005s	Displays the expected operating time when a fault occurs. When IDMT mode is used, the expected operating time depends on the measured voltage value. If the measured voltage changes during a fault, the expected operating time changes accordingly.
Time remaining to trip	-1800.000...1800.000s	0.005s	When the function has detected a fault and counts down time towards a trip, this displays how much time is left before tripping occurs.
U_{meas}/U_{set} at the moment	0.00...1250.00	0.01	The ratio between the measured or calculated neutral voltage and the pick-up value.

Function blocking

The blocking signal is evaluated at the start of each program cycle. The blocking signals are connected to the function's dedicated input, which can be configured in the *IO → Blocking Input Control* tab of the function.

- When the pick-up element activates and the blocking signal is not active, a START signal is generated and the function starts or continues the trip-time countdown.
- When the pick-up element activates and the blocking input signal is active, a BLOCKED signal is generated, and the function does not process the event further.
- When START signal is already active and the blocking input signal becomes active, the START signal is reset and BLOCKED signal is generated. The release-time characteristics are processed as if the fault condition had been cleared.

The blocking signal needs to reach the device minimum of 5 ms before the set operating delay has passed in order for the blocking to activate in time.

Operating time characteristics for trip and reset

The operating timers' behavior during a function can be set for TRIP signal and also for the release of the function in case the pick-up element is reset before the trip time has been reached. There are three basic operating modes available for the function:

- Instant operation: gives the TRIP signal with no additional time delay simultaneously with the START signal.

© Arcteq Relays Ltd
IM00021

- Definite time operation (DT): gives the TRIP signal after a user-defined time delay regardless of the measured or calculated voltage as long as the voltage is above the U_{set} value and thus the pick-up element is active (independent time characteristics).
- Inverse definite minimum time (IDMT): gives the TRIP signal after a time which is in relation to the set pick-up voltage U_{set} and the measured voltage U_m (dependent time characteristics).

The IDMT function follows this formula:

$$t = \frac{k}{\left(\frac{Um}{Us}\right)^a - 1}$$

Where:

- t = operating time
- k = time dial setting
- U_m = measured voltage
- U_s = pick-up setting
- a = IDMT multiplier setting

The following table presents the setting parameters for the function's time characteristics.

Table. 4.4.12 - 132. Setting parameters for operating time characteristics.

Name	Range	Step	Default	Description
Delay type	DT IDMT	-	DT	Selection of the delay type time counter. The selection possibilities are dependent (IDMT, Inverse Definite Minimum Time) and independent (DT, Definite Time) characteristics.
Definite operating time delay	0.000…1800.000s	0.005s	0.040s	Definite time operating delay. The setting is active and visible when DT is the selected delay type. When set to 0.000 s, the stage operates as instant without added delay. When the parameter is set to 0.005...1800 s, the stage operates as independent delayed.
Time dial setting k	0.01…60.00s	0.01s	0.05s	The setting is active and visible when IDMT is the selected delay type. Time dial/multiplier setting for IDMT characteristics.
IDMT Multiplier	0.01…25.00s	0.01s	1.00s	The setting is active and visible when IDMT is the selected delay type. IDMT time multiplier in the U_m/U_{set} power.

Table. 4.4.12 - 133. Setting parameters for reset time characteristics.

Name	Range	Step	Default	Description
Release time delay	0.000…150.000s	0.005s	0.06s	Resetting time. Time allowed between pick-ups if the pick-up has not led to a trip operation. During this time the START signal is held on for the timers if the delayed pick-up release is active.
Delayed pick-up release	• No • Yes	-	Yes	Resetting characteristics selection either as time-delayed or as instant after the pick-up element is released. If activated, the START signal is reset after a set release time delay.

Name	Range	Step	Default	Description
Time calc reset after release time	• No • Yes	-	Yes	Operating timer resetting characteristics selection. When active, the operating time counter is reset after a set release time if the pick-up element is not activated during this time. When disabled, the operating time counter is reset directly after the pick-up element reset.
Continue time calculation during release time	• No • Yes	-	No	Time calculation characteristics selection. If activated, the operating time counter continues until a set release time has passed even if the pick-up element is reset.

The user can reset characteristics through the application. The default setting is a 60 ms delay; the time calculation is held during the release time.

In the release delay option the operating time counter calculates the operating time during the release. When using this option the function does not trip if the input signal is not re-activated while the release time count is on-going.

Events and registers

The neutral overvoltage function (abbreviated "NOV" in event block names) generates events and registers from the status changes in the events listed below. The user can select which event messages are stored in the main event buffer: ON, OFF, or both. The events triggered by the function are recorded with a time stamp.

The function's outputs can be used for direct I/O controlling and user logic programming. The function also provides a cumulative counter for the START, TRIP and BLOCKED events.

The function offers four (4) independent stages; the events are segregated for each stage operation.

Table. 4.4.12 - 134. Event messages.

Event block name	Event names
NOV1...NOV4	Start ON/OFF
NOV1...NOV4	Trip ON/OFF
NOV1...NOV4	Block ON/OFF

The function registers its operation into the last twelve (12) time-stamped registers; this information is available for all provided instances separately. The register of the function records the ON event process data for START, TRIP or BLOCKED. The table below presents the structure of the function's register content.

Table. 4.4.12 - 135. Register content.

Register	Description
Date and time	dd.mm.yyyy hh:mm:ss.mss
Event	Event name
Fault type	L1-G…L1-L2-L3

© Arcteq Relays Ltd
IM00021

Register	Description
Pre-trigger voltage	Start/Trip -20ms voltage
Fault voltage	Start/Trip voltage
Pre-fault voltage	Start -200ms voltage
Trip time remaining	0 ms...1800s
Setting group in use	Setting group 1...8 active

4.4.13 Sequence voltage protection (U1/U2>/<; 47/27P/59PN)

The sequence voltage function is used for instant and time-delayed voltage protection. It has positive and negative sequence protection for both overvoltage and undervoltage (the user selects the needed function). The user can select the voltage used. Sequence voltage is based on the system's line-to-line voltage level. Protection stages can be set to protect against either undervoltage or overvoltage.

Positive sequence voltage calculation

Below is the formula for symmetric component calculation (and therefore to positive sequence voltage calculation).

$$U1 = {}^{1}/_{3}\,(U_{L1} + aU_{L2} + a^2U_{L3})$$

$$a = 1\angle 120°$$

$$a^2 = 1\angle 240°$$

$$U_{L1...3} = Line\ to\ neutral\ voltages$$

In what follows are three examples of positive sequence calculation (positive sequence component vector).

Figure. 4.4.13 - 79. Normal situation.

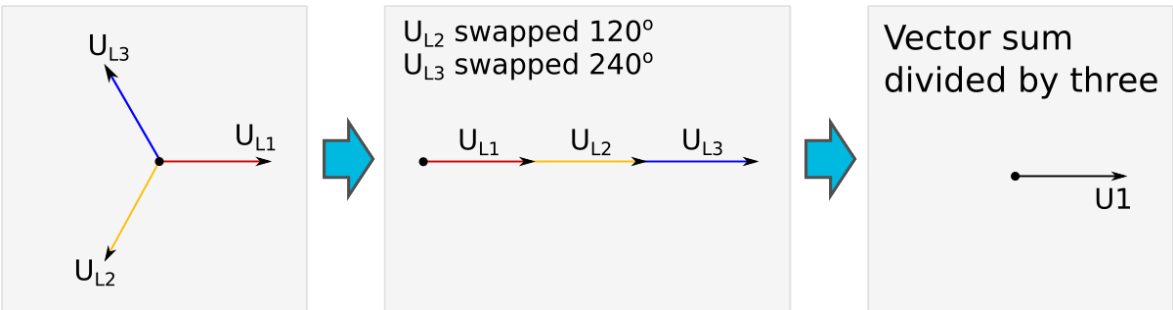

Figure. 4.4.13 - 80. Earth fault in an isolated network.

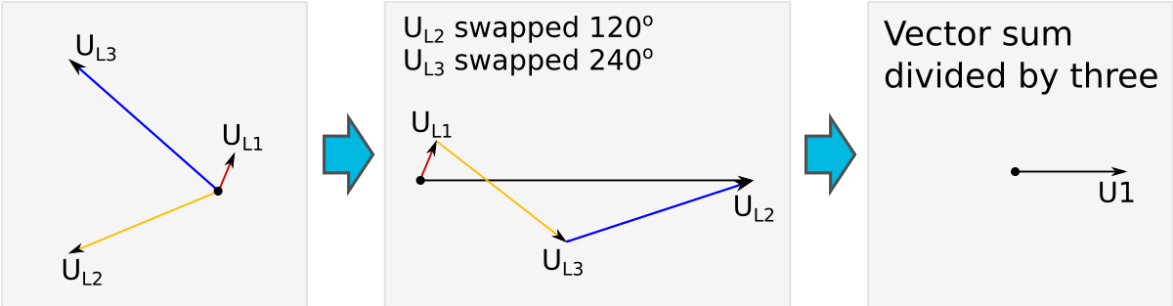

Figure. 4.4.13 - 81. Close-distance short-circuit between phases 1 and 3.

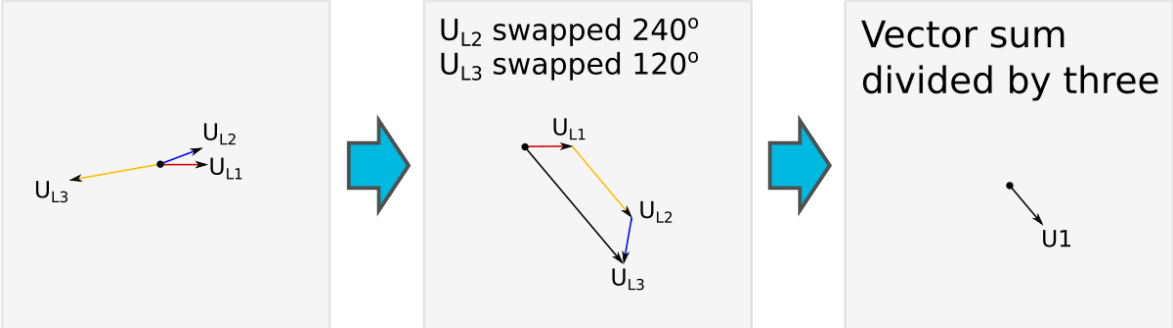

Negative sequence voltage calculation

Below is the formula for symmetric component calculation (and therefore to negative sequence voltage calculation).

$$U2 = {}^{1}/_{3}\,(U_{L1} + a^2 U_{L2} + a U_{L3})$$

$$a = 1\angle 120°$$

$$a^2 = 1\angle 240°$$

$$U_{L1\ldots3} = Line\ to\ neutral\ voltages$$

In what follows are three examples of negative sequence calculation (negative sequence component vector).

Figure. 4.4.13 - 82. Normal situation.

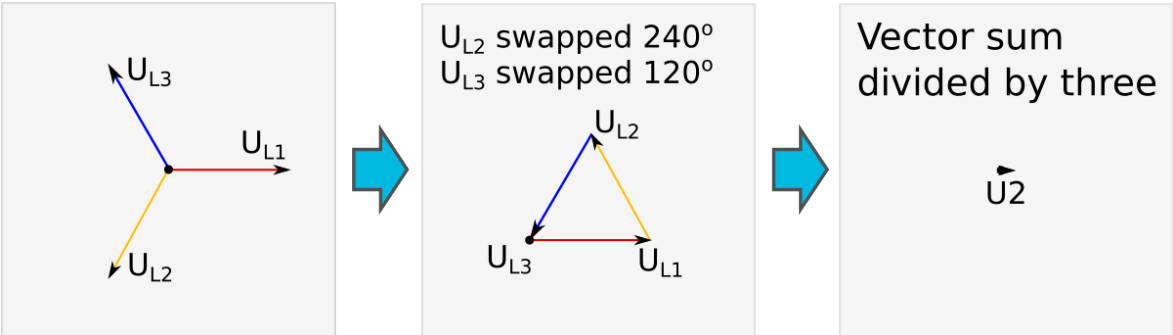

© Arcteq Relays Ltd
IM00021

Figure. 4.4.13 - 83. Earth fault in isolated network.

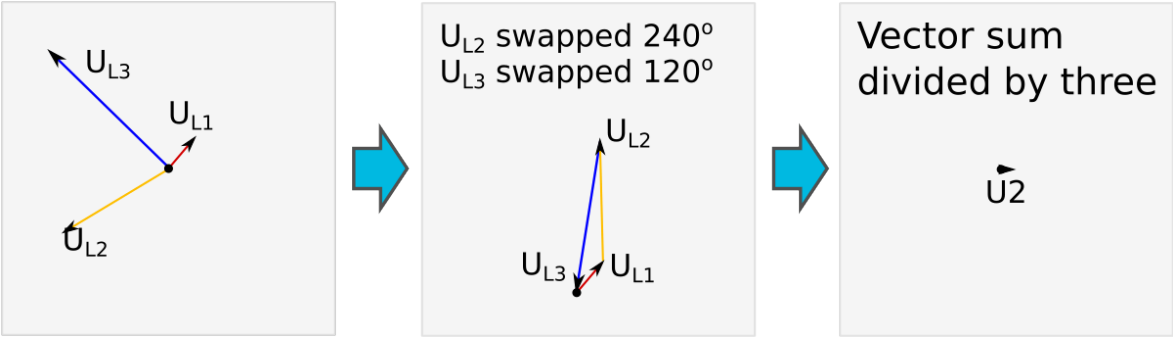

Figure. 4.4.13 - 84. Close-distance short-circuit between phases 1 and 3.

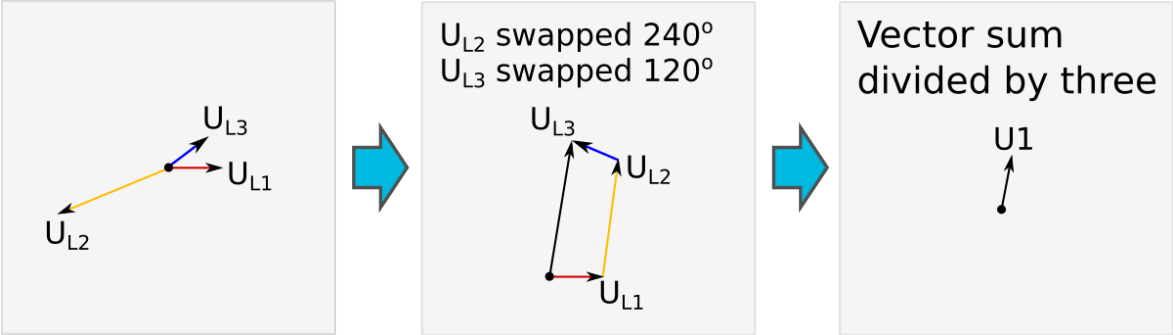

Figure. 4.4.13 - 85. Simplified function block diagram of the U1/U2>/< function.

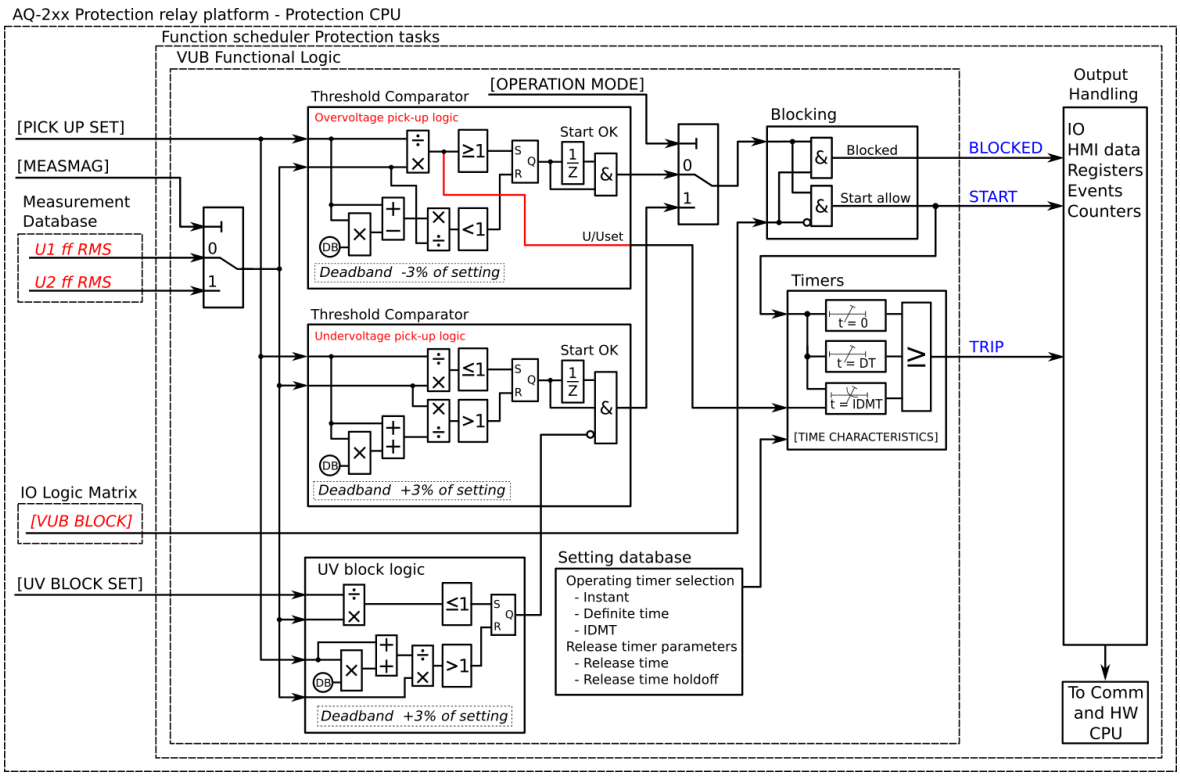

Measured input

The function block uses fundamental frequency component of phase-to-phase, phase-to-neutral and zero sequence voltage measurements. The user can select the monitored magnitude to be either positive sequence voltage or negative sequence voltage values.

Table. 4.4.13 - 136. Measurement inputs of the U1/U2>/< function.

Signal	Description
U_1RMS	Fundamental frequency component of U_1/V voltage channel
U_2RMS	Fundamental frequency component of U_2/V voltage channel
U_3RMS	Fundamental frequency component of U_3/V voltage channel
U_4RMS	Fundamental frequency component of U_4/V voltage channel

General settings

The following general settings define the general behavior of the function. These settings are static i.e. it is not possible to change them by editing the setting group.

Table. 4.4.13 - 137. General settings of the function.

Name	Range	Default	Description
U1/2 >/< LN mode	• On • Blocked • Test • Test/Blocked • Off	On	Set mode of VUB block. This parameter is visible only when *Allow setting of individual LN mode* is enabled in *General* menu.
U1/2 >/< force status to	• Normal • Start • Trip • Blocked	Normal	Force the status of the function. Visible only when *Enable stage forcing* parameter is enabled in *General* menu.
Measured magnitude	• U1 Positive sequence voltage • U2 Negative sequence voltage	U1 Positive sequence voltage	Selects which calculated voltage is supervised.

Pick-up settings

The U_{set} setting parameter controls the pick-up of the U1/U2>/< function. This defines the maximum or minimum allowed calculated U1 or U2 voltage before action from the function. The function constantly calculates the ratio between the U_{set} and the calculated U1 or U2 magnitude (U_C). The monitored voltage is chosen in the *Info* page with the parameter *Measured magnitude*. The reset ratio of 97 % in overvoltage applications is built into the function and is always relative to the U_{set} value. The reset ratio of 103 % in undervoltage applications is built into the function and is always relative to the U_{set} value. When the U_C goes above or below the U_{set} value it triggers the pick-up operation of the function.

Setting group selection controls the operating characteristics of the function, i.e. the user or user-defined logic can change function parameters while the function is running.

© Arcteq Relays Ltd
IM00021

Table. 4.4.13 - 138. Pick-up settings.

Name	Range	Step	Default	Description
Pick-up terms	• Over > • Under<	-	Over>	Selects whether the function picks-up when the monitored voltage is under or over the set pick-up value.
U_{set}	5.00…150.00%U_n	0.01%U_n	105%U_n	Pick-up setting
U_{blk}	0.00…80.00%U_n	0.01%U_n	5%U_n	Undervoltage blocking (visible when the pick-up term is Under<)

Using *Block setting* to prevent nuisance trips

It is recommended to use the *Under block setting* U_{blk} parameter when Under< is the chosen tripping condition to prevent the function from tripping in a situation where the network is de-energized. When the measured voltage drops below the set value, the function does not give a tripping signal. If the measured voltage has dropped below the *Under block setting* U_{blk} parameter, the blocking continues until all of the line voltages have increased above the U< pick-up setting. Please see the image below for a visualization of this function. If the block level is set to zero (0), blocking is not in use.

Figure. 4.4.13 - 86. Example of the block setting operation.

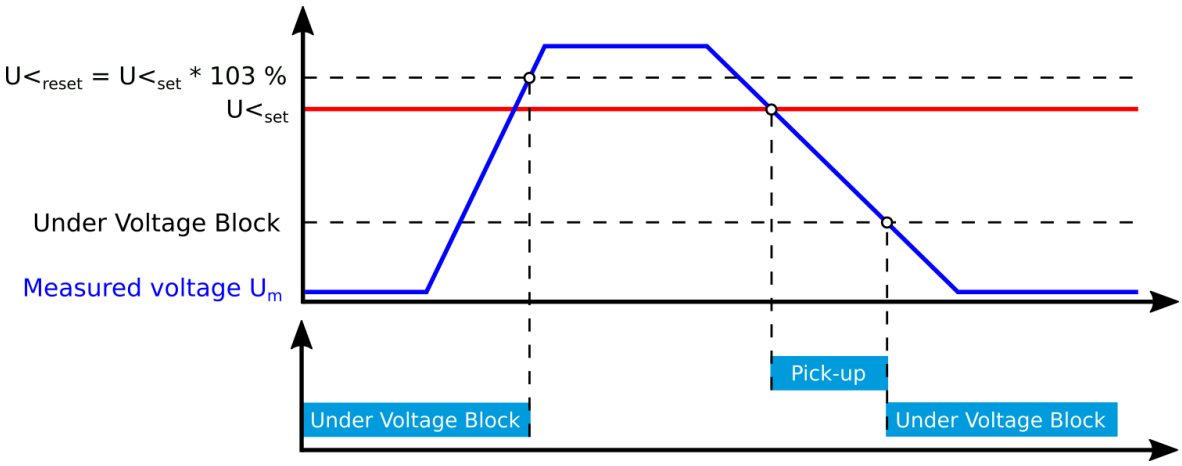

Read-only parameters

The function's *Info* page displays useful, real-time information on the state of the protection function. It is accessed either through the device's HMI display, or through the setting tool software when it is connected to the device and its Live Edit mode is active.

Table. 4.4.13 - 139. Information displayed by the function.

Name	Range	Step	Description
U1/2 >/< LN behaviour	• On • Blocked • Test • Test/Blocked • Off	-	Displays the mode of VUB block. This parameter is visible only when *Allow setting of individual LN mode* is enabled in *General* menu.

Name	Range	Step	Description
U1/2 >/< Pick-up setting	0.0...1 000 000.0V	0.1V	The primary voltage required for tripping. The displayed pick-up voltage level depends on the pick-up setting and the voltage transformer settings.
Expected operating time	0.000...1800.000s	0.005s	Displays the expected operating time when a fault occurs. When IDMT mode is used, the expected operating time depends on the measured voltage value. If the measured voltage changes during a fault, the expected operating time changes accordingly.
Time remaining to trip	-1800.000...1800.000s	0.005s	When the function has detected a fault and counts down time towards a trip, this displays how much time is left before tripping occurs.
U_{meas}/U_{set} at the moment	0.00...1250.00U_m/U_{set}	0.01U_m/U_{set}	The ratio between the measured voltage and the pick-up value.

Function blocking

The blocking signal is evaluated at the start of each program cycle. The blocking signals are connected to the function's dedicated input, which can be configured in the *IO → Blocking Input Control* tab of the function.

- When the pick-up element activates and the blocking signal is not active, a START signal is generated and the function starts or continues the trip-time countdown.
- When the pick-up element activates and the blocking input signal is active, a BLOCKED signal is generated, and the function does not process the event further.
- When START signal is already active and the blocking input signal becomes active, the START signal is reset and BLOCKED signal is generated. The release-time characteristics are processed as if the fault condition had been cleared.

The blocking signal needs to reach the device minimum of 5 ms before the set operating delay has passed in order for the blocking to activate in time.

Operating time characteristics for trip and reset

The operating timers' behavior during a function can be set for TRIP signal and also for the release of the function in case the pick-up element is reset before the trip time has been reached. There are three basic operating modes available for the function:

- Instant operation: gives the TRIP signal with no additional time delay simultaneously with the START signal.
- Definite time operation (DT): gives the TRIP signal after a user-defined time delay regardless of the measured or calculated voltage as long as the voltage is above the U_{set} value and thus the pick-up element is active (independent time characteristics).
- Inverse definite minimum time (IDMT): gives the TRIP signal after a time which is in relation to the set pick-up voltage U_{set} and the measured voltage U_m (dependent time characteristics).

The IDMT function follows one of the following formulas:

Overvoltage

$$t = \frac{k}{\left(\frac{Um}{Us}\right)^a - 1}$$

Undervoltage

$$t = \frac{k}{1 - \left(\frac{Um}{Us}\right)^a}$$

© Arcteq Relays Ltd
IM00021

Where:

- t = operating time
- k = time dial setting
- U_m = measured voltage
- U_s = pick-up setting
- a = IDMT multiplier setting

The following table presents the setting parameters for the function's time characteristics.

Table. 4.4.13 - 140. Setting parameters for operating time characteristics.

Name	Range	Step	Default	Description
Delay type	• DT • IDMT	-	DT	Selection of the delay type time counter. The selection possibilities are dependent (IDMT, Inverse Definite Minimum Time) and independent (DT, Definite Time) characteristics.
Definite operating time delay	0.000…1800.000s	0.005s	0.040s	Definite time operating delay. The setting is active and visible when DT is the selected delay type. When set to 0.000 s, the stage operates as instant without added delay. When the parameter is set to 0.005...1800 s, the stage operates as independent delayed.
Time dial setting k	0.01…60.00s	0.01s	0.05s	The setting is active and visible when IDMT is the selected delay type. Time dial/multiplier setting for IDMT characteristics.
IDMT Multiplier	0.01…25.00s	0.01s	1.00s	The setting is active and visible when IDMT is the selected delay type. IDMT time multiplier in the U_m/U_{set} power.

Table. 4.4.13 - 141. Setting parameters for reset time characteristics.

Name	Range	Step	Default	Description
Release time delay	0.000…150.000s	0.005s	0.06s	Resetting time. Time allowed between pick-ups if the pick-up has not led to a trip operation. During this time the START signal is held on for the timers if the delayed pick-up release is active.
Delayed pick-up release	• No • Yes	-	Yes	Resetting characteristics selection either as time-delayed or as instant after the pick-up element is released. If activated, the START signal is reset after a set release time delay.
Time calc reset after release time	• No • Yes	-	Yes	Operating timer resetting characteristics selection. When active, the operating time counter is reset after a set release time if the pick-up element is not activated during this time. When disabled, the operating time counter is reset directly after the pick-up element reset.
Continue time calculation during release time	• No • Yes	-	No	Time calculation characteristics selection. If activated, the operating time counter continues until a set release time has passed even if the pick-up element is reset.

The user can reset characteristics through the application. The default setting is a 60 ms delay; the time calculation is held during the release time.

In the release delay option the operating time counter calculates the operating time during the release. When using this option the function does not trip if the input signal is not re-activated while the release time count is on-going.

Events and registers

The sequence voltage function (abbreviated "VUB" in event block names) generates events and registers from the status changes in the events listed below. The user can select which event messages are stored in the main event buffer: ON, OFF, or both. The events triggered by the function are recorded with a time stamp.

The function's outputs can be used for direct I/O controlling and user logic programming. The function also a resettable cumulative counter for the START, TRIP and BLOCKED events.

The function offers four (4) independent stages; the events are segregated for each stage operation.

Table. 4.4.13 - 142. Event messages.

Event block name	Event names
VUB1...VUB4	Start ON/OFF
VUB1...VUB4	Trip ON/OFF
VUB1...VUB4	Block ON/OFF

The function registers its operation into the last twelve (12) time-stamped registers; this information is available for all provided instances separately. The register of the function records the ON event process data for START, TRIP or BLOCKED. The table below presents the structure of the function's register content.

Table. 4.4.13 - 143. Register content.

Register	Description
Date and time	dd.mm.yyyy hh:mm:ss.mss
Event	Event name
Pre-trigger voltage	Start/Trip -20ms voltage
Fault voltage	Start/Trip voltage
Pre-fault voltage	Start -200ms voltage
Trip time remaining	0 ms...1800s
Setting group in use	Setting group 1...8 active

© Arcteq Relays Ltd
IM00021

4.4.14 Overfrequency and underfrequency protection (f>/<; 81O/81U)

The frequency protection function can be used both in overfrequency and in underfrequency situations, and it has four (4) stages for both. Frequency protection can be applied to protect feeder, bus, transformer, motor and generator applications. The difference between the generated power and the load demand can cause the frequency to drop below or rise above the allowed level. When the consumption is larger than the generated power, the frequency may drop. When more power is generated than is consumed, overfrequency can occur.

In generator applications too big a load or a malfunction in the power controller can cause the frequency to decrease. Underfrequency causes damage to turbine wings through vibration as well as heating due to increased iron losses, dropped cooling efficieny and over-magnetization in step-up transformers. Overfrequency protection prevents the generator from running too fast which can cause damage to the generator turbine.

Underfrequency and overfrequency protection can be used as an indicator of an accidental island operation in distributed generation and in some consumers (as it is unlikely that the consumed and generated power are the same). Overfrequency is also often used to control power generation to keep the system's frequency consistent.

Each stage can be activated and deactivated individually. After the f>/< mode has been activated (*Protection → Stage activation → Frequency stages*), the user can activate and deactivate the individual stages at will (*Protection → Frequency → Frequency protection f >/< → INFO → Stage operational setup*).

Figure. 4.4.14 - 87. Simplified function block diagram of the f> function.

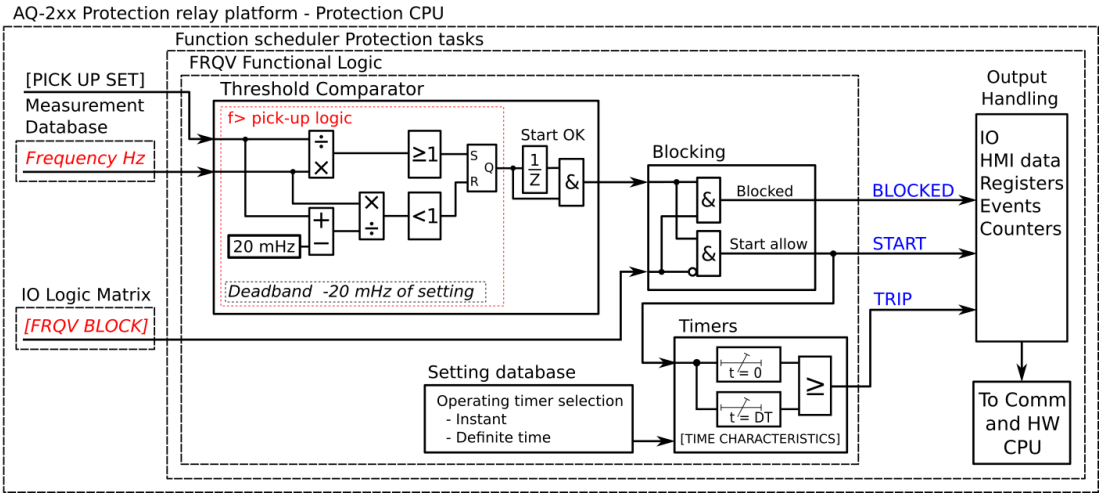

Figure. 4.4.14 - 88. Simplified function block diagram of the f< function.

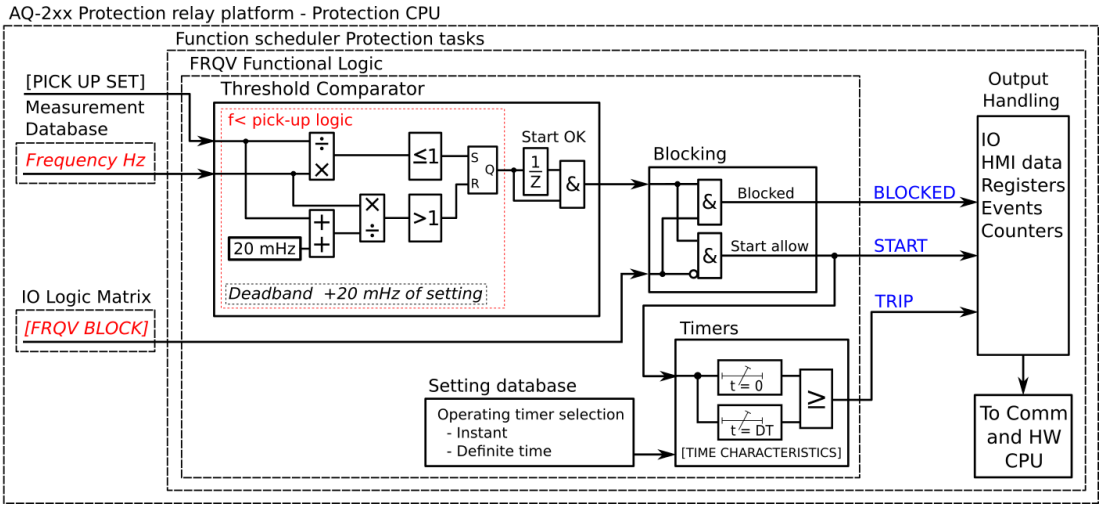

Measured input

The frequency protection function compares the measured frequency to the pick-up setting (given in Hz). There are three (3) frequency references available. Please refer to "Frequency tracking and scaling" chapter for a detailed description of frequency tracking.

Table. 4.4.14 - 144. Measurement inputs of the f>/< function.

Signals	Description
Frequency reference 1	Primary frequency reference
Frequency reference 2	Secondary frequency reference
Frequency reference 3	Tertiary frequency reference

General settings

The following general settings define the general behavior of the function. These settings are static i.e. it is not possible to change them by editing the setting group.

Table. 4.4.14 - 145. General settings of the function.

Name	Range	Default	Description
f</> LN mode	• On • Blocked • Test • Test/ Blocked • Off	On	Set mode of FRQV block. This parameter is visible only when *Allow setting of individual LN mode* is enabled in *General* menu.

© Arcteq Relays Ltd
IM00021

Name	Range	Default	Description
f> enable f>> enable f>>> enable f>>>> enable f< enable f<< enable f<<< enable f<<<< enable	• No • Yes	No	Enables or disables the stage.
f> force status to f>> force status to f>>> force status to f>>>> force status to f< force status to f<< force status to f<<< force status to f<<<< force status to	• Normal • Start • Trip • Blocked	Normal	Force the status of the function. Visible only when *Enable stage forcing* parameter is enabled in *General* menu.

Pick-up settings

The f_{set}>, f_{set}>>, etc.setting parameters control the pick-up of each stage of the f>/< function. They define the maximum or minimum allowed measured frequency before action from the function. The function constantly calculates the ratio between the pick-up setting and the measured frequency. The reset ratio of 20mHz is built into the function and is always relative to the pick-up value.

Setting group selection controls the operating characteristics of the function, i.e. the user or user-defined logic can change function parameters while the function is running.

Table. 4.4.14 - 146. Pick-up settings.

Name	Range	Step	Default	Description
f> used in setting group	• No • Yes	-	No	Enables or disables the protection stage in the setting group.
fset>	10.00…80.00Hz	0.01Hz	51Hz	Pick-up setting
fset<	5.00…75.00Hz	0.01Hz	49Hz	Pick-up setting
f< undervoltage block	0.00...120.00%Un	0.01%Un	0.00%Un	Block setting. If set to zero, blocking is not in use. When the measured voltage drops below the set value, the operation of the functions is blocked.

Operating time characteristics for trip and reset

This function supports definite time delay (DT). For detailed information on these delay types please refer to the chapter "General properties of a protection function" and its section "Operating time characteristics".

Read-only parameters

The function's *Info* page displays useful, real-time information on the state of the protection function. It is accessed either through the device's HMI display, or through the setting tool software when it is connected to the device and its Live Edit mode is active.

Table. 4.4.14 - 147. Information displayed by the function.

Name	Range	Step	Description
f</> LN behaviour	• On • Blocked • Test • Test/Blocked • Off	-	Displays the mode of FRQV block. This parameter is visible only when *Allow setting of individual LN mode* is enabled in *General* menu.
f</> condition	• Normal • Start • Trip • Blocked	-	Displays the status of the protection function.
f meas / f set	0.000..20.000f_m/f_{set}	0.001f_m/f_{set}	The ratio between the measured frequency and the pick-up value.
Expected operating time	0.000...1800.000s	0.005s	Displays the expected operating time when a fault occurs.
Time remaining to trip	-1800.000...1800.000s	0.005s	When the function has detected a fault and counts down time towards a trip, this displays how much time is left before tripping occurs.

Function blocking

The blocking signal is evaluated at the start of each program cycle. The blocking signals are connected to the function's dedicated input, which can be configured in the *IO → Blocking Input Control* tab of the function.

- When the pick-up element activates and the blocking signal is not active, a START signal is generated and the function starts or continues the trip-time countdown.
- When the pick-up element activates and the blocking input signal is active, a BLOCKED signal is generated, and the function does not process the event further.
- When START signal is already active and the blocking input signal becomes active, the START signal is reset and BLOCKED signal is generated. The release-time characteristics are processed as if the fault condition had been cleared.

The blocking signal needs to reach the device minimum of 5 ms before the set operating delay has passed in order for the blocking to activate in time.

© Arcteq Relays Ltd
IM00021

Events and registers

The frequency function (abbreviated "FRQV" in event block names) generates events and registers from the status changes in the events listed below. The user can select which event messages are stored in the main event buffer: ON, OFF, or both. The events triggered by the function are recorded with a time stamp.

The function's outputs can be used for direct I/O controlling and user logic programming. The function also provides a resettable cumulative counter for the START, TRIP and BLOCKED events.

Table. 4.4.14 - 148. Event messages.

Event block name	Event names
FRQV1	f>/< Start ON/OFF
FRQV1	f>/< Trip ON/OFF
FRQV1	f>/< Blocked ON/OFF

The function registers its operation into the last twelve (12) time-stamped registers. The table below presents the structure of the function's register content.

Table. 4.4.14 - 149. Register content.

Register	Description
Date and time	dd.mm.yyyy hh:mm:ss.mss
Event	Event name
f Pre-trig (Hz)	Start/Trip -20ms frequency
f Fault (Hz)	Fault frequency
Setting group in use	Setting group 1...8 active

4.4.15 Rate-of-change of frequency (df/dt>/<; 81R)

The rate-of-change of frequency function is used to detect fast drops or increases in frequency. If the load changes fast this function detects and clears the frequency-based faults faster than conventional underfrequency and overfrequency protections. One of the most common causes for the frequency to deviate from its nominal value is an unbalance between the generated power and the load demand. If the unbalance is big the frequency changes rapidly.

The rate-of-change of frequency protection can also be applied to detect a loss of mains situation. Loss of mains is a situation where a part of the network (incorporating generation) loses its connection with the rest of the system (i.e. becomes an islanded network). A generator that is not disconnected from the network can cause safety hazards. A generator can also be automatically reconnected to the network, which can cause damage to the generator and the network.

Figure. 4.4.15 - 89. Operation of the df/dt>/< function when the frequency starts but doesn't trip.

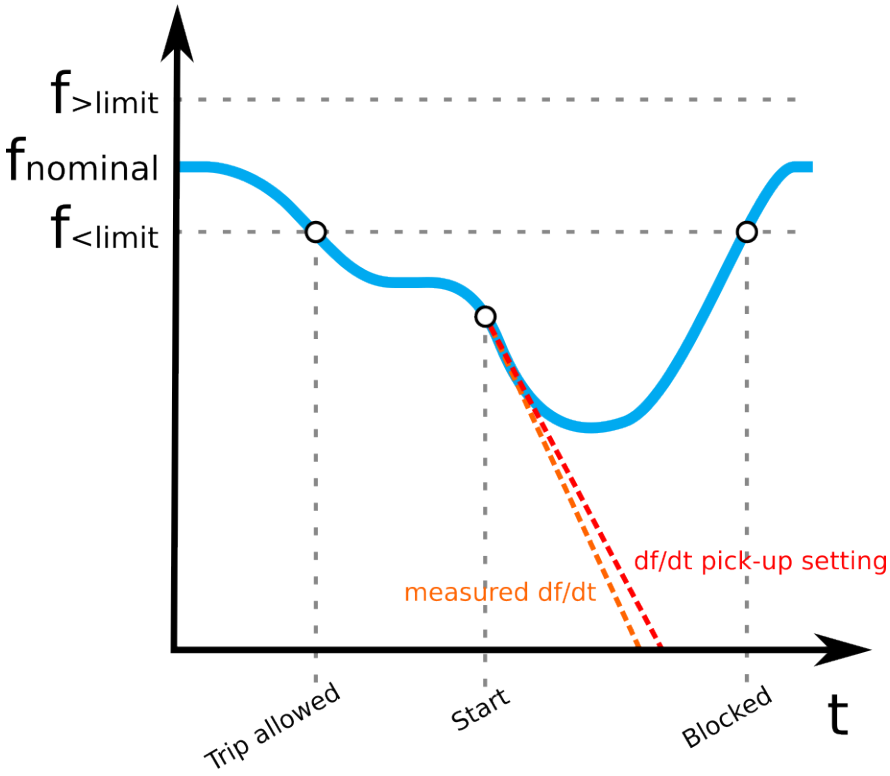

The figure above presents an example of the df/dt>/< function's operation when the frequency is decreasing. If the $f_{<limit}$ and/or $f_{>limit}$ is activated, the function does not trip no matter how fast the measured frequency changes if it's over the $f_{<limit}$ or under $f_{>limit}$. As can be seen in the figure above, when the frequency decreases under the $f_{<limit}$,tripping is allowed although the change of frequency is not yet fast enough for the function to trip. Later the frequency makes a fast dip and as a result the change of frequency is faster than the set pick-up value which then causes the function to operate.

Each stage can be activated and deactivated individually. After the f>/< mode has been activated (*Protection → Stage activation → Frequency stages*), the user can activate and deactivate the individual stages at will (*Protection → Frequency → Frequency protection f >/< → INFO → Stage operational setup*).

Figure. 4.4.15 - 90. Simplified function block diagram of the df/dt>/< function.

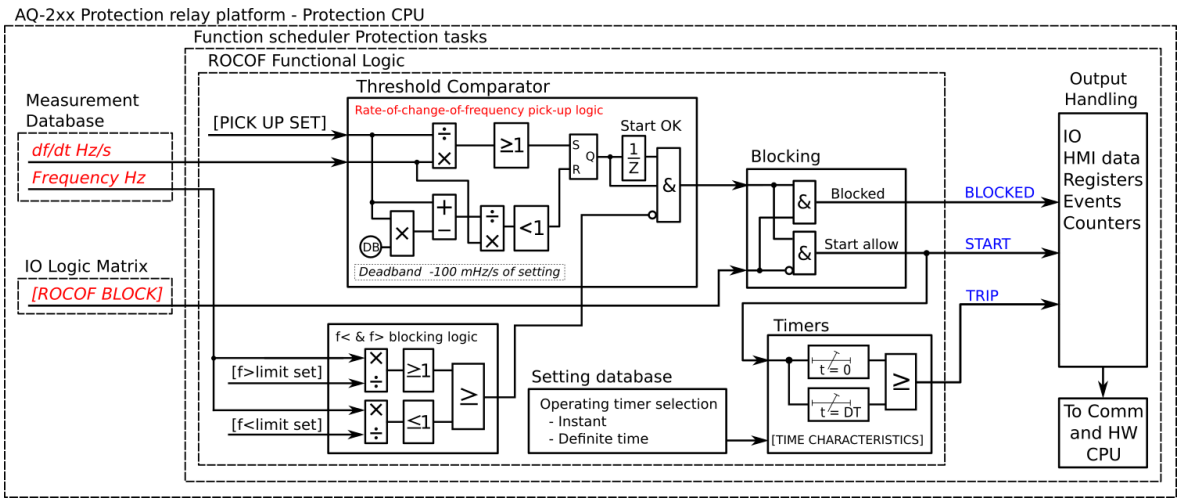

© Arcteq Relays Ltd
IM00021

Measured input

The rate-of-change of frequency protection function compares the measured df/dt>/< ratio to the pick-up setting (given in Hz/s). There are three (3) frequency references available. Please refer to "Frequency tracking and scaling" chapter for a detailed description of frequency tracking.

Table. 4.4.15 - 150. Measurement inputs of the df/dt>/< function.

Signals	Description
Frequency reference 1	Primary frequency reference
Frequency reference 2	Secondary frequency reference
Frequency reference 3	Tertiary frequency reference

General settings

The following general settings define the general behavior of the function. These settings are static i.e. it is not possible to change them by editing the setting group.

Table. 4.4.15 - 151. General settings of the function.

Name	Range	Step	Default	Description
df/dt >/< LN mode	• On • Blocked • Test • Test/ Blocked • Off	-	On	Set mode of DFT block. This parameter is visible only when *Allow setting of individual LN mode* is enabled in *General* menu.
Max allowed df/dt rate	0.10...50.00 Hz/s	0.10 Hz/s	20 Hz/s	If df/dt rate exceeds this setting, the function is blocked.
df/dt >/< (1...8) enable	• No • Yes	-	No	Enables or disables the stage.
df/dt >/< (1...8) force status to	• Normal • Start • Trip • Blocked	-	Normal	Force the status of the function. Visible only when *Enable stage forcing* parameter is enabled in *General* menu.

Pick-up and time delay

The df/dt>/< (1) pick-up, df/dt>/< (2) pick-up, etc. setting parameters control the pick-up of each stage of the df/dt>/< function. They define the maximum or minimum allowed change of frequency before action from the function. The function constantly calculates the ratio between the pick-up setting and the measured df/dt>/<. The reset ratio of +/- 100 mHz/s is built into the function and is always relative to the pick-up value. The f>/< limit value is used to block the funtion from operating near the nominal frequency.

Setting group selection controls the operating characteristics of the function, i.e. the user or user-defined logic can change function parameters while the function is running.

Table. 4.4.15 - 152. Pick-up settings.

Name	Range	Step	Default	Description
df/dt>/< (1…8) used in setting group	• No • Yes	-	No	Enables the protection stage in setting group.
df/dt>/< (1…8) operating mode	• Rising • Falling • Both	-	Rising	Defines the operation mode of the protection stage. In "Rising" mode df/dt function can trip only from increasing frequency. In "Falling" mode df/dt function can trip only from decreasing frequency. "Both" allows df/dt to trip from both.
df/dt>/< (1…8) frequency limit	• Not used • Use f limit	-	Not used	Displays if frequency limits are used or not.
df/dt>/< (1…8) pick-up	0.01…10.00Hz/s	0.01Hz/s	0.2Hz/s	Pick-up setting.
df/dt>/< (1…8) f< limit	7.00…65.00Hz	0.01Hz	49.95Hz	Underfrequency limit. Tripping is permitted when measured frequency is under this value. This parameter is visible only when operation mode is set to "Falling" or "Both".
df/dt>/< (1…8) f> limit	10.00…70.00Hz	0.01Hz	51Hz	Overfrequency limit. Tripping is permitted if measured frequency is above this value. This parameter is visible only when operation mode is set to "Rising" or "Both".

Operating time characteristics for trip and reset

This function supports definite time delay (DT). For detailed information on these delay types please refer to the chapter "General properties of a protection function" and its section "Operating time characteristics".

Read-only parameters

The function's *Info* page displays useful, real-time information on the state of the protection function. It is accessed either through the device's HMI display, or through the setting tool software when it is connected to the device and its Live Edit mode is active.

Table. 4.4.15 - 153. Information displayed by the function.

Name	Range	Step	Description
df/dt >/< LN behaviour	• On • Blocked • Test • Test/Blocked • Off	-	Displays the mode of DFT block. This parameter is visible only when *Allow setting of individual LN mode* is enabled in *General* menu.
Measured df/dt	0.000...20.000Hz/s	0.001Hz/s	Rate-of-change-of-frequency at the moment.

© Arcteq Relays Ltd
IM00021

Name	Range	Step	Description
df/dt >/< (1...8) condition	• Normal • Start • Trip • Blocked	-	Displays the status of the protection function.
df/dt >/< (1...8) df/dt meas / df/dt set	0.000...20.000p.u.	0.005p.u.	The ratio between the rate-of-change-of-frequency and the pick-up value.
Expected operating time	0.000...1800.000s	0.005s	Displays the expected operating time when a fault occurs.
Time remaining to trip	-1800.000...1800.000s	0.005s	When the function has detected a fault and counts down time towards a trip, this displays how much time is left before tripping occurs.

Function blocking

The blocking signal is evaluated at the start of each program cycle. The blocking signals are connected to the function's dedicated input, which can be configured in the *IO → Blocking Input Control* tab of the function.

- When the pick-up element activates and the blocking signal is not active, a START signal is generated and the function starts or continues the trip-time countdown.
- When the pick-up element activates and the blocking input signal is active, a BLOCKED signal is generated, and the function does not process the event further.
- When START signal is already active and the blocking input signal becomes active, the START signal is reset and BLOCKED signal is generated. The release-time characteristics are processed as if the fault condition had been cleared.

The blocking signal needs to reach the device minimum of 5 ms before the set operating delay has passed in order for the blocking to activate in time.

Events and registers

The rate-of-change of frequency function (abbreviated "DFT" in event block names) generates events and registers from the status changes in the events listed below. The user can select which event messages are stored in the main event buffer: ON, OFF, or both. The events triggered by the function are recorded with a time stamp.

The function's outputs are can be used for direct I/O controlling and user logic programming. The function also provides a resettable cumulative counter for the START, TRIP and BLOCKED events.

Table. 4.4.15 - 154. Event messages.

Event block name	Event names
DFT1	df/dt>/< (1...8) Start ON/OFF
DFT1	df/dt>/< (1...8) Trip ON/OFF
DFT1	df/dt>/< (1...8) Blocked ON/OFF

The function registers its operation into the last twelve (12) time-stamped registers. The table below presents the structure of the function's register content.

Table. 4.4.15 - 155. Register content.

Register	Description
Date and time	dd.mm.yyyy hh:mm:ss.mss
Event	Event name
df/dt>/< Pre-trig (Hz/s)	Start/Trip –20ms df/dt>/<
f Pre-trig (Hz)	Start/Trip –20ms frequency
df/dt>/< Fault (Hz/s)	Fault df/dt>/<
f Fault (Hz)	Fault frequency
Setting group in use	Setting group 1...8 active

4.4.16 Power protection (P, Q, S>/<; 32)

The power protection function is for instant and time-delayed, three-phase overpower or underpower protection (active, reactive, or apparent). The user can select the operating mode with parameter settings.

Figure. 4.4.16 - 91. PQ diagram of the pick-up areas in various modes.

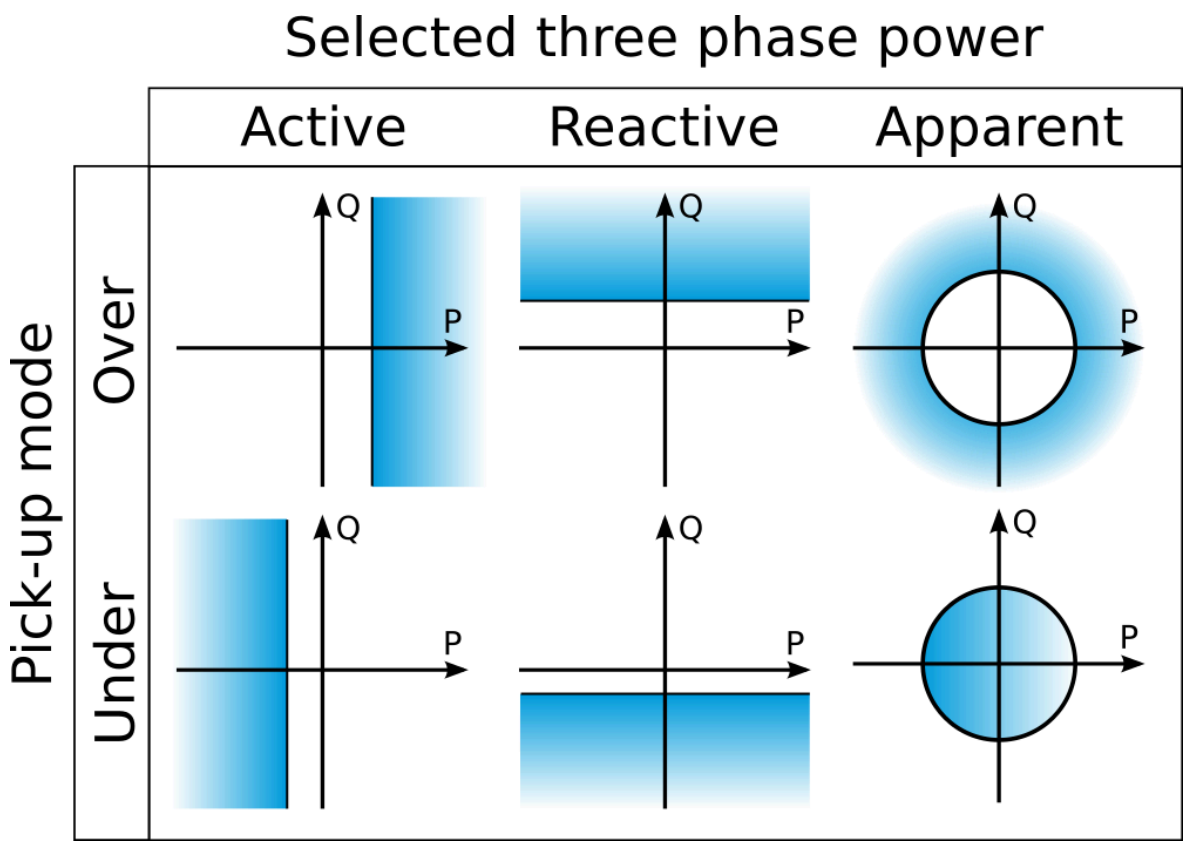

© Arcteq Relays Ltd
IM00021

Figure. 4.4.16 - 92. Simplified function block diagram of the power protection function.

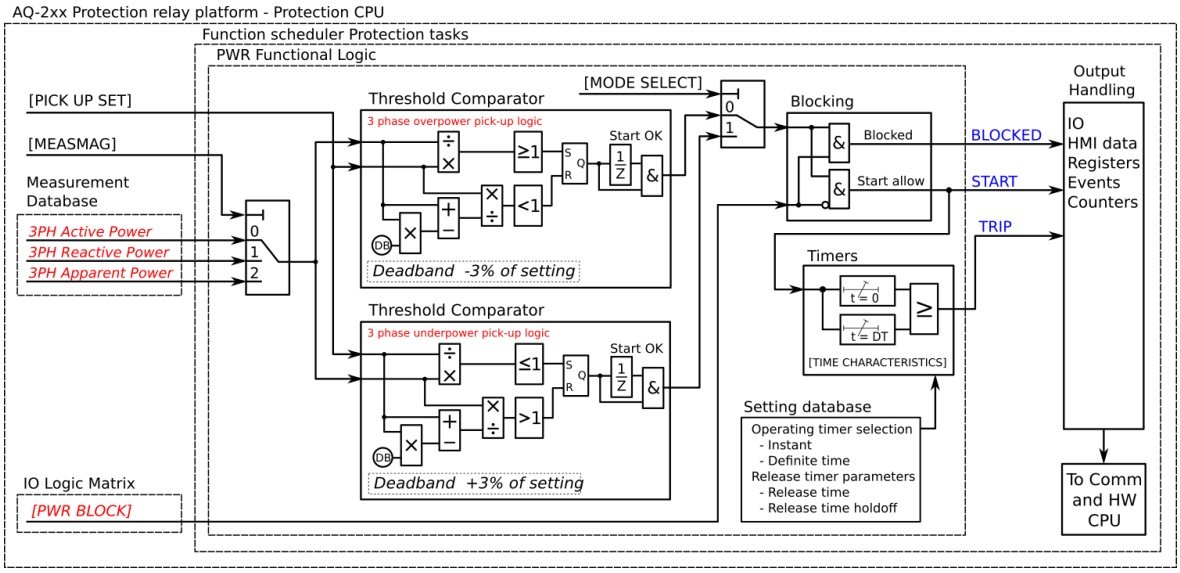

Measured input

The function block uses three phase currents and line-to-neutral or line-to-line voltages to calculate active, reactive or apparent power (as the uset chooses). Please refer to "Power and energy calculation" chapter for a detailed description of power calculation.

Table. 4.4.16 - 156. Measurement inputs of the P> function.

Signal	Description
I_{L1}RMS	Fundamental frequency component of phase L1 (A) current measurement
I_{L2}RMS	Fundamental frequency component of phase L2 (B) current measurement
I_{L3}RMS	Fundamental frequency component of phase L3 (C) current measurement
U_1RMS	Fundamental frequency component of U_1/V voltage measurement
U_2RMS	Fundamental frequency component of U_2/V voltage measurement
U_3RMS	Fundamental frequency component of U_3/V voltage measurement
U_4RMS	Fundamental frequency component of U_4/V voltage measurement

General settings

The following general settings define the general behavior of the function. These settings are static i.e. it is not possible to change them by editing the setting group.

Table. 4.4.16 - 157. General settings of the function.

Name	Range	Default	Description
PQS>/< LN mode	• On • Blocked • Test • Test/ Blocked • Off	On	Set mode of PWR block. This parameter is visible only when *Allow setting of individual LN mode* is enabled in *General* menu.
PQS>/< force status to	• Normal • Start • Trip • Blocked	Normal	Force the status of the function. Visible only when *Enable stage forcing* parameter is enabled in *General* menu.
PQS>/< measurement side	• POW1 • POW2	POW1	Defines which side of power measurement is used. POW1 and POW2 can be set up at *Measurements → Power and energy measurements*.

Pick-up settings

The PQS>/< setting parameter controls the pick-up of the power protection function. This defines the maximum or minimum allowed measured three-phase power (active, reactive, or apparent) before action from the function. The function constantly calculates the ratio between the PQS>/< and the measured power magnitude. The reset ratios of 97 % (pick-up mode "Over") and 103 % (pick-up mode "Under") are built into the function and is always relative to the pick-up value.

Setting group selection controls the operating characteristics of the function, i.e. the user or user-defined logic can change function parameters while the function is running.

Table. 4.4.16 - 158. Pick-up settings.

Name	Range	Step	Default	Description
Measured magnitude	• P3PH • Q3PH • S3PH	-	P3PH	Defines which three phase power is used: Active, reactive or apparent power.
Nominal MVA reference	• Set manually • Use Gen nom MVA • Use Trafo nom MVA	-	Set manually	Defines whether the used nominal power is set manually or if transformer or generator status monitoring function defines the nominal power automatically.
Set nominal MVA	0.0001...1000.0000MVA	0.0001MVA	10MVA	Nominal MVA used by the function. This parameter is visible only when "Nominal MVA reference" parameter is set to "Set manually"
Pick-up mode	• > Over • < Under	-	Over	Defines whether the function operates in underpower or overpower protection mode.
Pick-up	-500.000…500.000%	0.005%	0%	Pick-up setting. Related to the nominal power set by the user.

© Arcteq Relays Ltd
IM00021

Read-only parameters

The function's *Info* page displays useful, real-time information on the state of the protection function. It is accessed either through the device's HMI display, or through the setting tool software when it is connected to the device and its Live Edit mode is active.

Table. 4.4.16 - 159. Information displayed by the function.

Name	Range	Step	Description
PQS>/< LN behaviour	On Blocked Test Test/Blocked Off	-	Displays the mode of PWR block. This parameter is visible only when *Allow setting of individual LN mode* is enabled in *General* menu.
PQS>/< condition	Normal Start Trip Blocked	-	Displays the status of the protection function.
PQS>/< selected measurement	POW1CT1 POW1CT2 POW2CT1 POW2CT2 Undefined	-	Displays the selected power measurement. This indication is visible if the device has more than one current measurement unit.
Nominal MVA used	0.000...1800.000MVA	0.001MVA	Displays the nominal power used by the function. This parameter is displayed if "Nominal MVA reference" parameter has been set to "Use Gen nom MVA" or "Use Trafo nom MVA".
Pick-up setting	-1800.000...1800.000MVA	0.001MVA	Pick-up setting used at the moment by the function. Value of this parameter can change if setting group has been changed.
Measurement now	-1800.000...1800.000MVA	0.001MVA	Measured active, reactive or apparent power at the moment.
Meas/Set at the moment	-1250.00...1250.00p.u.	0.01p.u.	Ratio between the measured power and pick-up setting.
Meas/Nom at the moment	-1250.00...1250.00p.u.	0.01p.u.	Ratio between the measured power and used nominal power value.
Expected operating time	0.000...1800.000s	0.005s	Displays the expected operating time when a fault occurs.
Time remaining to trip	-1800.000...1800.000s	0.005s	When the function has detected a fault and counts down time towards a trip, this displays how much time is left before tripping occurs.

Function blocking

The blocking signal is evaluated at the start of each program cycle. The blocking signals are connected to the function's dedicated input, which can be configured in the *IO → Blocking Input Control* tab of the function.

- When the pick-up element activates and the blocking signal is not active, a START signal is generated and the function starts or continues the trip-time countdown.

- When the pick-up element activates and the blocking input signal is active, a BLOCKED signal is generated, and the function does not process the event further.
- When START signal is already active and the blocking input signal becomes active, the START signal is reset and BLOCKED signal is generated. The release-time characteristics are processed as if the fault condition had been cleared.

The blocking signal needs to reach the device minimum of 5 ms before the set operating delay has passed in order for the blocking to activate in time.

Operating time characteristics for trip and reset

This function supports definite time delay (DT). For detailed information on these delay types please refer to the chapter "General properties of a protection function" and its section "Operating time characteristics".

Events and registers

The power protection function (abbreviated "PWR" in event block names) generates events and registers from the status changes in the events listed below. The user can select which event messages are stored in the main event buffer: ON, OFF, or both. The events triggered by the function are recorded with a time stamp.

The function's output can be used for direct I/O controlling and user logic programming. The function also a resettable cumulative counter for the START, TRIP and BLOCKED events.

The function offers four (4) independent stages; the events are segregated for each stage operation.

Table. 4.4.16 - 160. Event messages.

Event block name	Event names
PWR1...PWR4	Start ON/OFF
PWR1...PWR4	Trip ON/OFF
PWR1...PWR4	Block ON/OFF

The function registers its operation into the last twelve (12) time-stamped registers. The register of the function records the ON event process data for START, TRIP or BLOCKED. The table below presents the structure of the function's register content.

Table. 4.4.16 - 161. Register content.

Register	Description
Date and time	dd.mm.yyyy hh:mm:ss.mss
Event	Event name
Pre-trigger power	Start/Trip -20ms power
Fault power	Start/Trip power
Pre-fault power	Start -200ms power
Trip time remaining	0 ms...1800s
Setting group in use	Setting group 1...8 active

© Arcteq Relays Ltd
IM00021

4.4.17 Motor status monitoring

The motor status monitoring function is designed to be the one place where the user can set up all necessary motor data and select the used motor protection functions. Settings related to the protection functions can also be edited inside each function and any changes are updated into this function as well. In addition to the motor data settings, this function counts the number of times the motor starts, the number of times the motor start has succeeded, and the number of times the motor has been stopped. The function also keeps track of the running time and the starting time. Additionally, the function has a cumulative counter that tells the overall time the motor has been stopped, and it shows the last time the motor was stopped.

The signals can be used in indication or in application logics. They are also the basis of the events the function generates (if so chosen).

Figure. 4.4.17 - 93. Simplified function block diagram of the motor status monitoring function.

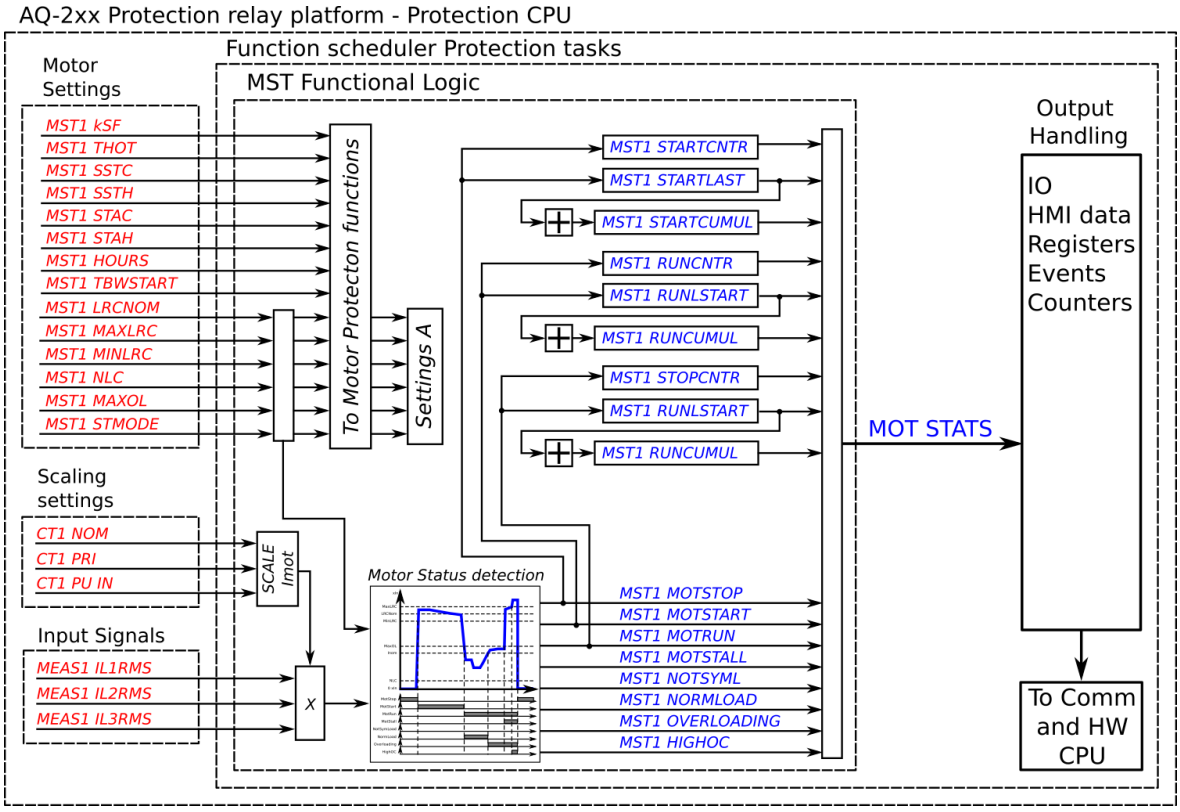

The function's outputs are dependent on the motor data the user has set. The following two diagram present the function's outputs in various situations.

Figure. 4.4.17 - 94. Activation of the function's outputs.

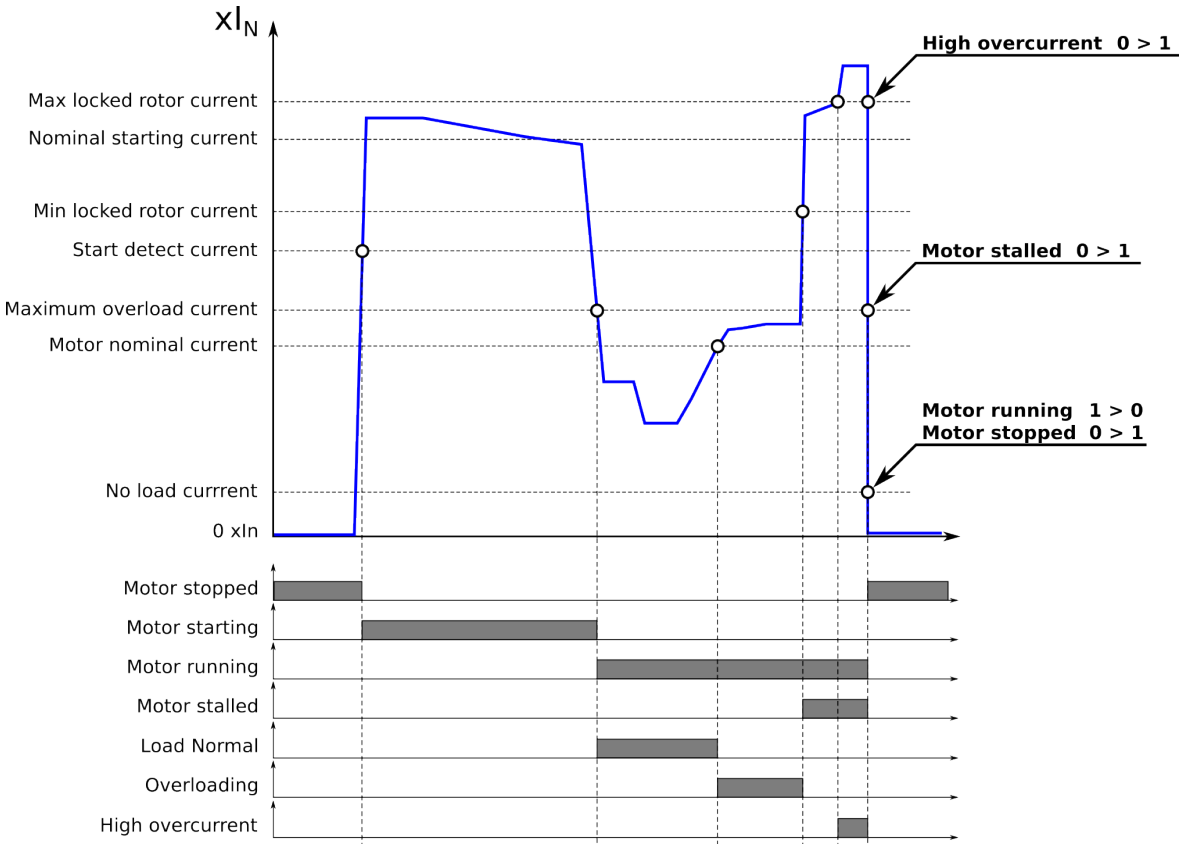

The *Motor stopped* signal is activated when the current is below the “No load current” limit for longer than 10 ms. When the current increases from this status to above the “Start detect current” setting, a start of the motor is detected and the *Motor starting* signal is activated. If the current stays below the “Max locked rotor current” setting, the start-up situation continues. When the current decreases below the “Maximum overload current” setting, the start situation is considered to be over and the motor running, resulting in the activation of the *Motor running* signal. When the measured current is between the “No load current” and the "Motor nominal current" (including the service factor and the ambient temperature factor), the load is considered to be normal, activating the *Load Normal* signal. If the current then starts rising, and exceeds the “Motor nominal current” setting but does not exceed the “Maximum overload current” setting, the *Overloading* signal is activated. If the current does exceed the “Maximum overload current” setting, the *Motor stalled* signal is activated. If the current exceeds the “Max locked rotor current” setting, the *High overcurrent* signal is activated. When the measured current decreases below the “No load current” setting, the *Motor stopped* signal is activated again. The *Missing phase* signal is activated only if one of the phases is lost during *Motor starting* or *Motor running* and the measured current in that phase is reduced below the “No load current” setting.

These motor status signals can be used in the motor protection scheme to block overcurrent stages, to change setting groups, and to release blockings (e.g if something happens during start-up).

© Arcteq Relays Ltd
IM00021

Figure. 4.4.17 - 95. Example of application: motor starting scheme and using motor status signals.

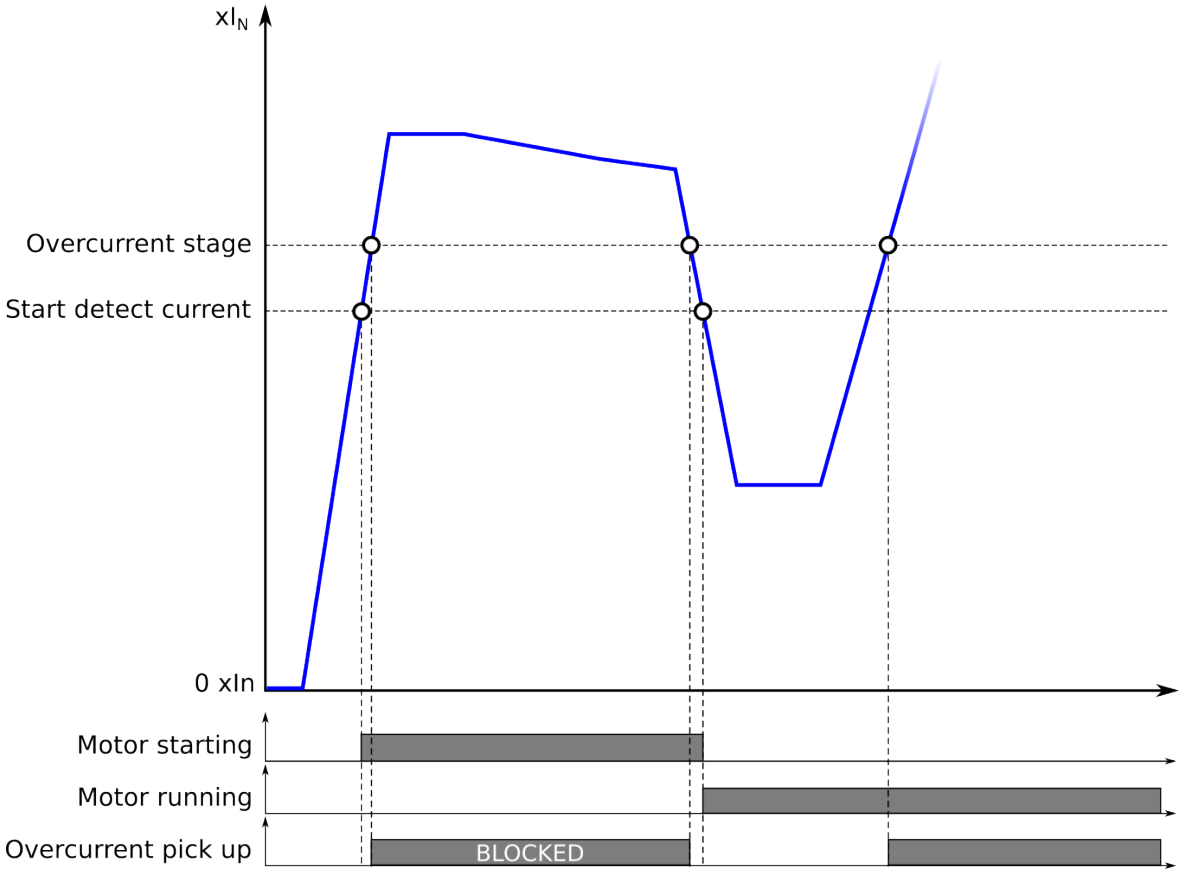

When a motor is starting, an overcurrent stage with a low pick-up setting is either blocked or –as in some protection relays– the setting value is multiplied by a prescribed factor. This prevents the protection stage from activating and the motor from starting, especially when the low-set overcurrent stage has an operating time that is shorter than the start-up time of the protected motor. The figure above presents how the START signals behave during a motor start-up.

Settings and signals

The settings of the motor status monitoring function are mostly shared with other motor protection functions in the device's motor module.

Table. 4.4.17 - 162. Settings of the motor status monitoring function.

Name	Range	Step	Default	Description
MST LN mode	• On • Blocked • Test • Test/Blocked • Off	-	On	Set mode of MST block. This parameter is visible only when *Allow setting of individual LN mode* is enabled in *General* menu.
MST LN behaviour	• On • Blocked • Test • Test/Blocked • Off	-	-	Displays the mode of MST block. This parameter is visible only when *Allow setting of individual LN mode* is enabled in *General* menu.

Name	Range	Step	Default	Description
MST force status to	• NoForce • MotStop • MotStart • MotRun • MotStall • LoadNotSym • NormLoad • Overload • HighOverload	-	Normal	Force the status of the function. Visible only when *Enable stage forcing* parameter is enabled in *General* menu.
Motor Start	• DOL • Star-Delta • Soft start	-	DOL	The motor starting mode selection. The user can select between Direct On Line (DOL), Star-Delta and Soft start in future releases.
Motor nominal current	0.1...5000 A	0.1 A	-	The motor's nominal current in amperes.
Motor In Scaled	0.1...40.0xI_n	0.1xI_n	-	The motor's nominal current scaled to per unit. If the user selects *Object In* in the CT settings, this value should be 1.00. If scaled to the CT nominal, this value may vary.
Nominal starting current	0.1…40.0xI_n	0.1xI_n	6.0xI_n	The motor's locked rotor current with the nominal voltage. This setting is used for automatic curve selection and calculation. Also, the nominal starting capacity calculation is based on this value.
Nominal starting current A	0.1...5000A	0.1A	-	The motor's locked rotor current in amperes.
Start detect current	0.1…40.0xI_n	0.1xI_n	1.5xI_n	The motor starting current detection limit. When in DOL or Star-Delta mode, this setting defines the motor starting moment when the measured current exceeds both the no-load current limit and the start detect current limit within a ten-millisecond period. If the current increases slower, it is not defined as a motor start.
Start detect current A	0.1...5000A	0.1A	-	The motor's starting current detection limit in amperes.
Min locked rotor current	0.1…40.0xI_n	0.1xI_n	3.5xI_n	The motor's minimum locked rotor current. This setting defines the current limit for when this current is exceeded while the automatic curve selection and the control only short time constant (stall) are in use.
Min locked rotor current A	0.1...5000A	0.1A	-	The motor's minimum locked rotor current. This setting defines the current limit for when this current is exceeded while the automatic curve selection and the control only short time constant (stall) are in use.
Max locked rotor current	0.1…40.0xI_n	0.1xI_n	7.5xI_n	Maximum locked rotor current of the motor. This setting defines the current limit which is maximum current for the motor to draw in locked rotor situation (starting or stalled). If the measured current exceeds this setting limit it is considered to be overcurrent fault and corresponding measures can be applied to disconnect the feeder and motor from the supply.

© Arcteq Relays Ltd
IM00021

Name	Range	Step	Default	Description
Max locked rotor current A	0.1...5000A	0.1A	-	The maximum locked rotor current in amperes.
Maximum overload current	0.1…40.0xI_n	0.1xI_n	2.0xI_n	The motor's maximum overload current. Exceeding this setting stalls the motor. This setting defines when the thermal replica switches to the short (stall) time constant. As long as the current stays below this setting value, the motor should run even when overloaded.
Maximum overload current A	0.1...5000A	0.1A	-	The motor's maximum overload current in amperes.
No load current <	0.1…40.0xI_n	0.1xI_n	0.2xI_n	The motor's no load current. This setting defines the “Stopped” condition when the current is below this setting value. Also, when the current is below this value, the undercurrent protection stage is locked.
No load current < A	0.1...5000A	0.1A	-	The motor's no load current in amperes.
Motor service factor	0.01…5.00xI_n	0.01xI_n	1.00xI_n	Service factor which corrects the maximum allowed loading according to various conditions (e.g. installation, construction, etc.) which vary from the presumption conditions. Frequently motors are stamped to a service factor of 1.15: this means that they can withstand a continuous 15% overloading from the rated current (as this is not necessary in all conditions, it is recommended to consult the motor's datasheet or manual for details). If the service factor is not known, this parameter should be left at its default setting of 1.00 x I_n.
Hot condition theta limit	0.0…100.0%	0.1%	70%	Setting the motor's thermal limit in a hot or a cold situation. When this setting value is not exceed while a locked rotor situation occurs, the function uses a cold stall curve adjusted with the actually used thermal capacity. The function uses a hot stall curve when this setting value is exceeded. This setting also applies to starts when the hot/ cold selection is in use. Please note that using this setting requires that the Machine thermal overload protection (Tm>) function is activated and in use.
Safe stall time cold	0.1…600.0s	0.1s	20.0s	The safe stall time when the motor is cold. Unless this value is specified, it is set to be equal to the hot stall time. Most probably this leads to overprotection with the cold motor stall (best case scenario). This setting value is used for the cold thermal stall curve selection in automatic control. This parameter is also used in the motor start-up and the number of starts calculations.
Safe stall time hot	0.1…600.0s	0.1s	15.0s	The safe stall time when the motor is hot. This setting value is used for the hot thermal stall curve selection in automatic control. This parameter is also used in the motor start-up and the number of starts calculations.
Allowed starts when cold	1…100	1	3	The number of allowed starts per x hours for a cold motor.

Name	Range	Step	Default	Description
Allowed starts when hot	1…100	1	2	The number of allowed starts per x hours for a hot motor.
Given hot/ cold starts in time of	1…100h	1h	1h	The number of hours when the parameters of the number of allowed starts (hot and cold) apply.
Min time between starts	0.1…600.0s	0.1s	20.0s	The minimum time between starts or start attempts.
Overall differential protection	• Machine diff. (Yy) • Diff.with trafo (Xx)	-	Machine diff. (Yy)	Defines if current transformers are installed to both sides of transformer or just to both sides of motor. Transformer related settings appear when "Diff.with trafo (Xx)".
Tranf. vector group	• Manual set • Yy0 • Yyn0 • YNy0 • YNyn0 • Yy6 • Yyn6 • YNy6 • YNyn6 • Yd1 • YNd1 • Yd7 • YNd7 • Yd11 • YNd11 • Yd5 • YNd5 • Dy1 • Dyn1 • Dy7 • Dyn7 • Dy11 • Dyn11 • Dy5 • Dyn5 • Dd0 • Dd6	-	Yy0	The selection of the transformer's vector group. The selection values are predefined so that the scaling and vector matching are applied in the protection device automatically when the correct vector group is selected. The predefinitions assume that the HV side is connected to the CT1 module and that the LV side is connected to the CT2 module. If the protected transformer vector group is not found in the predefined list, it can be manually set by selecting the option "Manual set".
HV side Star or Zigzag / Delta	• Star/Zigzag • Delta	-	Star/ Zigzag	The selection of the HV side connection. Can be selected between star or zigzag and delta. This selection is visible only if the option "Manual set" is selected for the vector group setting.
HV side earthed	• Not earthed • Earthed	-	Not earthed	The selection of whether or not the zero sequence compensation is applied in the HV side current calculation. The selection is visible only if the option "Manual set" is selected for the vector group setting.
LV side Star or Zigzag / Delta	• Star/Zigzag • Delta	-	Star/ Zigzag	The selection of the LV side connection. Can be selected between star or zigzag and delta. This selection is visible only if the option "Manual set" is selected for the vector group setting.

© Arcteq Relays Ltd
IM00021

Name	Range	Step	Default	Description
LV side earthed	• Not earthed • Earthed	-	Not earthed	The selection of whether or not the zero sequence compensation is applied in the LV side current calculation. The selection is visible only if the option "Manual set" is selected for the vector group setting.
LV side lead or lag HV	• Lead • Lag	-	Lead	The selection of whether the LV side leads or lags the HV side. The selection is visible only if the option "Manual set" is selected for the vector group setting.
HV-LV side phase angle	0.0...360.00deg	0.1deg	0.0deg	The angle correction factor for HV/LV sides, looked from the HV side. E.g. if the transformer is Dy1, this is set to 30 degrees. The selection is visible only if the option "Manual set" is selected for the vector group setting.
HV-LV side mag correction	0.0…100.0xI_n	0.1xI_n	0.0xI_n	The magnitude correction for the HV-LV side currents (in p.u.), if the currents are not directly matched through the calculations of the nominal values. The selection is visible only if the option "Manual set" for the vector group setting.
Enable Id0> (REF) HV side	• Disabled • Enabled	-	Disabled	The selection of whether the restricted earth fault stage on the HV side is enabled or disabled.
Enable Id0> (REF) LV side	• Disabled • Enabled	-	Disabled	The selection of whether the restricted earth fault stage on the LV side is enabled or disabled.
HV side starpoint meas.	• I01 • I02	-	I01	The selection of the starpoint measurement channel for the restricted earth fault protection on the HV side. This setting is only visible if the option "Enabled" is selected for the "Enable I0d> (REF) HV side" setting.
LV side starpoint meas.	• I01 • I02	-	I01	The selection of the starpoint measurement channel for the restricted earth fault protection on the LV side. This setting is only visible if the option "Enabled" is selected for the "Enable I0d> (REF) LV side" setting.

Table. 4.4.17 - 163. Output signals of the motor status monitoring function.

Name	Description
Motor stopped	The *Motor stopped* signal is active when the function detects a current below the set value of "No load current". This signal presents a situation when a motor is not running.
Motor starting	The *Motor starting* signal is active when a motor start-up is detected. In DOL mode, the signal is active when the measured current exceeds the "Start detect current" (from the Motor stopped situation); the signal deactivates when the current decreases below the "Max overloading current".
Motor running	The *Motor running* signal is active when the measured current is above the set "No load current" (as long as the Motor starting situation has passed). This signal is released when the measured current is below the "No load current" setting.
Motor stalled	The *Motor stalled* signal is active when the measured current exceeds the "Max overload current" setting (from the Motor running situation).

Name	Description
Missing phase	The *Missing phase* signal is activated when the measured current of one phase is below the "No load current" setting, and the measured currents of two phases are above the "Min locked rotor current" setting. This signal can be used for quickly halting the motor's start-up if one phase is lost and the motor cannot start.
Load Normal	The *Load normal* signal is active when the measured current is above the set "No load current" and below the motor's nominal current (including the ambient and service factor corrections).
Overloading	The *Overloading* signal is active when the measured current exceeds the motor's nominal current (including the ambient and service factor corrections) but does not exceed the "Max overload current" setting.
High overcurrent	The *High overcurrent* signal is active when the measured current is above the "Max locked rotor current" setting and presents a situation where the motor cannot start or stall. When this signal activates, it indicates a short-circuit fault and should immediately be used to halt start-up or stalled situations.

Events and registers

The motor status monitoring function (abbreviated "MST" in event block names) generates events and registers from the status changes in the events listed below. The user can select which event messages are stored in the main event buffer: ON, OFF, or both. The events triggered by the function are recorded with a time stamp.

The function's output can be used for direct I/O controlling and user logic programming. The function also a resettable cumulative counter for the MOTOR STARTS, MOTOR STARTS SUCCEEDED and TIMES MOTOR STOPPED events.

Table. 4.4.17 - 164. Event messages.

Event block name	Event names
MST1	Motor Starting ON/OFF
MST1	Motor Running ON/OFF
MST1	Motor Stalled ON/OFF
MST1	Load not symm ON/OFF
MST1	Load normal ON/OFF
MST1	Overload ON/OFF
MST1	High Overcurrent ON/OFF

The function registers its operation into the last twelve (12) time-stamped registers. The table below presents the structure of the function's register content.

Table. 4.4.17 - 165. Register content.

Register	Description
Date and time	dd.mm.yyyy hh:mm:ss.mss
Event	Event name

© Arcteq Relays Ltd
IM00021

Register	Description
L1 current	Phase L1 current x I_n
L2 current	Phase L2 current x I_n
L3 current	Phase L3 current x I_n
Thermal delta	Detected change in thermal capacity.
Motor load	Motor loading when triggered.

4.4.18 Generator/motor/transformer differential protection (Idb>/Idi>/I0dHV>/I0dLV>; 87T/87G/87M/87N)

The function is used for differential protection of two-winding transformers, motors and generators. Differential protection function is based on calculating the difference between the ingoing and outgoing currents. If the operating status is normal, all power that comes in also goes out. If this is not the case, the transformer has an internal fault and the device should be de-energized as soon as possible to avoid extensive damage to the protected object(s).

Differential protection is very sensitive and it is scaled internally to the loading and fault current flowing through the transformer. For example, an interturn fault in the transformer's windings could go entirely unnoticed by an overcurrent relay while a differential relay could trip it in the very first power cycle. The same goes for internal earth faults: they can be impossible for conventional earth fault protection to notice until the fault causes heavier fault currents (such as when the fault location is close to the neutral side inside the star winding).

Figure. 4.4.18 - 96. Differential protection function can be used for protecting transformers, machines (generators/motors) and both at the same time.

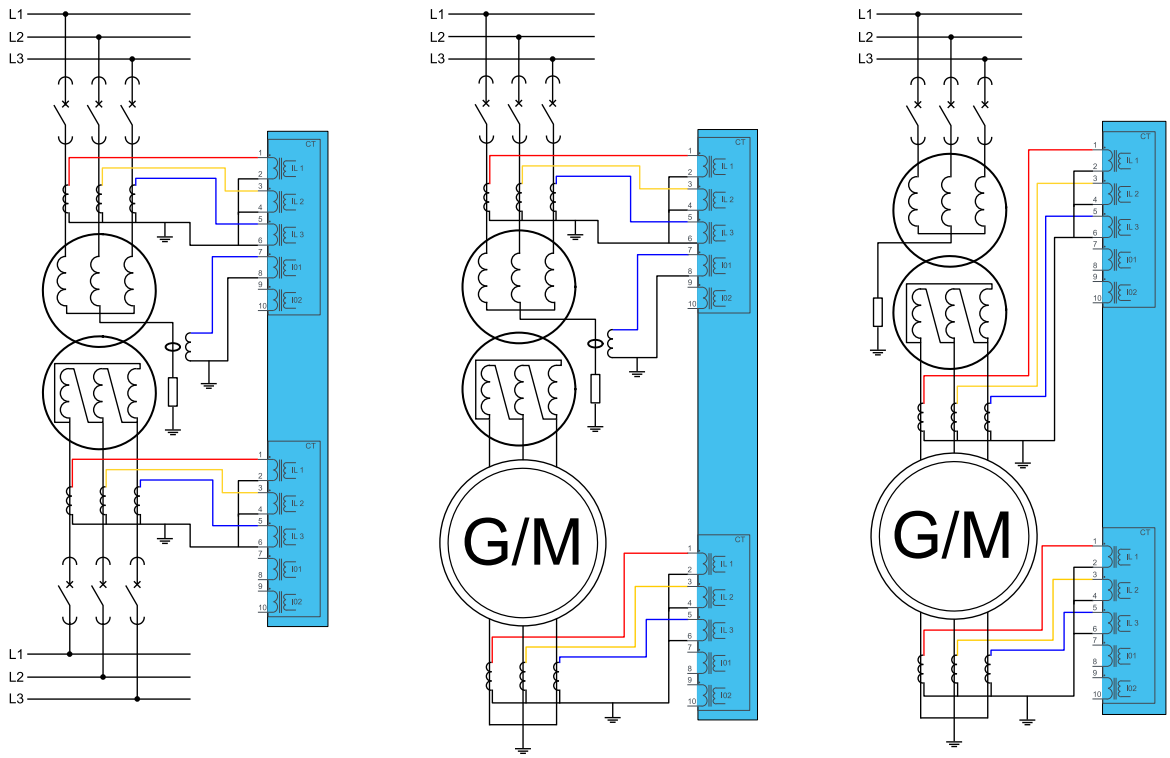

Transformer properties and basic concepts for differential protection

Setting the differential protection requires some intial data of the transformer to be known. At minimum, the following data needs to be available:

- the transformer's nominal power
- the nominal voltages of the HV side and the LV side
- the transformer's special properties, such as tap changer and auxiliary windings
- the transformer's vector group (for matching the transformer vectors in p.u.)
- the ratios and properties of the transformers HV and LV sides.

This chapter shows the setting and the principle of transformer differential protection step by step.

Figure. 4.4.18 - 97. Transformer and its components forming the differential zone.

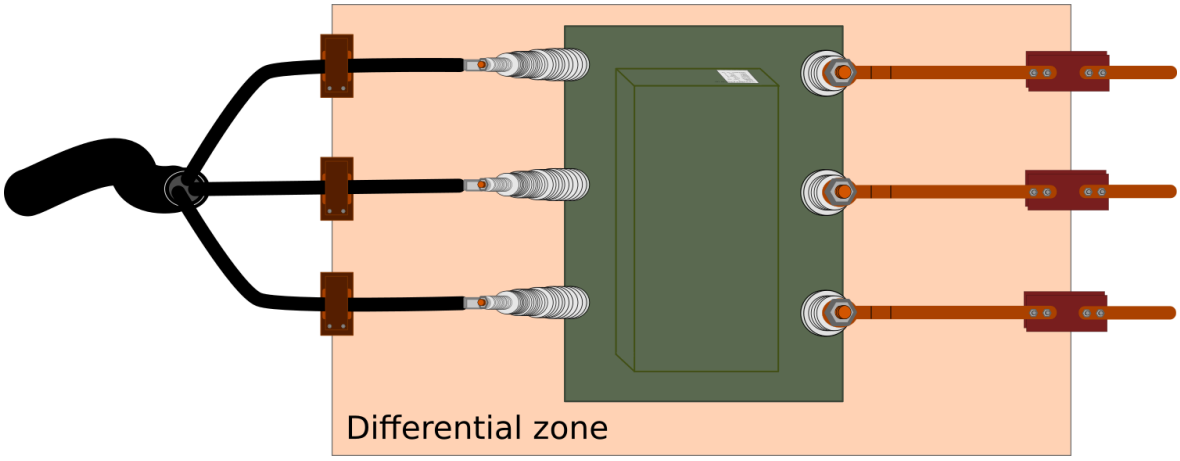

The differential protection area is the area between the current transformers. This is called the differential zone which means that the currents going in from one side must come out from the other side. This is true whether the signal is scaled higher or lower, or whether the phase angle is shifted. Unless both side currents match there is a problem within the protected zone which either blocks or keeps the current inside the zone.

Figure. 4.4.18 - 98. Transformer name plate data.

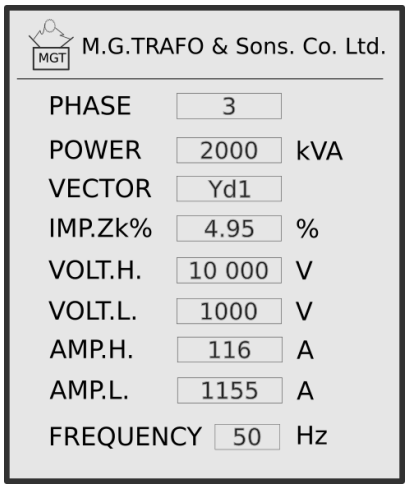

© Arcteq Relays Ltd
IM00021

According to the data on this example name plate, this transformer is designed for three-phase usage and has two windings. The nominal power of the transformer is 2 MVA. Its vector group is Yd1: this means that the high-voltage side is connected to the Y and the low-voltage side to the delta, resulting in the LV side having a 30-degree lag in relation to the HV side. Additionally, the HV side's nominal voltage is 10 kV, on the LV side the nominal voltage is 1kV. The transformer's short-circuit impedance is 4.95 %; it is based on the transformer's final test and presents how much short-circuit current the transformer is able to feed. The transformer's frequency is 50 Hz. If the transformer has a tap changer, its information is usually also available in the name plate data.

Nominal current matching is the first thing to consider in differential protection. Modern numerical protection relays can calculate these factors themselves as long as the transformer's nominal power and voltage levels are known. However, if one feels inclined to calculate the amplitude matching factor, they can do so with the formulas presented below.

For this example, let us say we want to do these calculation for the transformer whose name plate we have in the image above. Let us further say the HV side current transformers are 150/5 A and the LV side current transformers are 1200/5 A. The primary side factor (p.u.) and current are then calculated as follows:

$$I_{n,HV} = \frac{S_n}{\sqrt{3} \times U_{HV}} = \frac{2\,000\,000\ \mathrm{VA}}{\sqrt{3} \times 10\,000\ \mathrm{V}} = 115.47\ \mathrm{A}$$

$$I_{pu,pri,HV} = \frac{I_{n,HV}}{CT_{pri,HV}} = \frac{115.47\ \mathrm{A}}{150\ \mathrm{A}} = 0.77$$

$$I_{pu,sec,HV} = I_{pu,pri,HV} \times CT_{sec,HV} = 0.77 \times 5\ \mathrm{A} = 3.85\ \mathrm{A}$$

Then, the secondary side factor (p.u.) and current are calculated as follows:

$$I_{n,LV} = \frac{S_n}{\sqrt{3} \times U_{LV}} = \frac{2\,000\,000\ \mathrm{VA}}{\sqrt{3} \times 1\,000\ \mathrm{V}} = 1154.7\ \mathrm{A}$$

$$I_{pu,pri,LV} = \frac{I_{n,LV}}{CT_{pri,LV}} = \frac{1154.7\ \mathrm{A}}{1200\ \mathrm{A}} = 0.96$$

$$I_{pu,sec,LV} = I_{pu,pri,LV} \times CT_{sec,LV} = 0.96 \times 5\ \mathrm{A} = 4.81\ \mathrm{A}$$

The calculations show that if 2 MVA of power go through the transformer the CT's secondary current on the high-voltage side will be 3.85 A and the CT secondary current on the low-voltage side will be 4.81 A. The differential function uses these values to change them into measured currents in per unit. Therefore, it would show 1.0 · I_n for both HV and LV side measurements, eventhough the measured currents are different. This is called amplitude matching of the HV and LV sides. In modern differential relays this is done automatically when the nominal values and CT ratings are set for the transformer. Thus, these calculations only have nice-to-know informational value.

Figure. 4.4.18 - 99. Amplitude scaling to match the nominal currents and CTs in the differential relay.

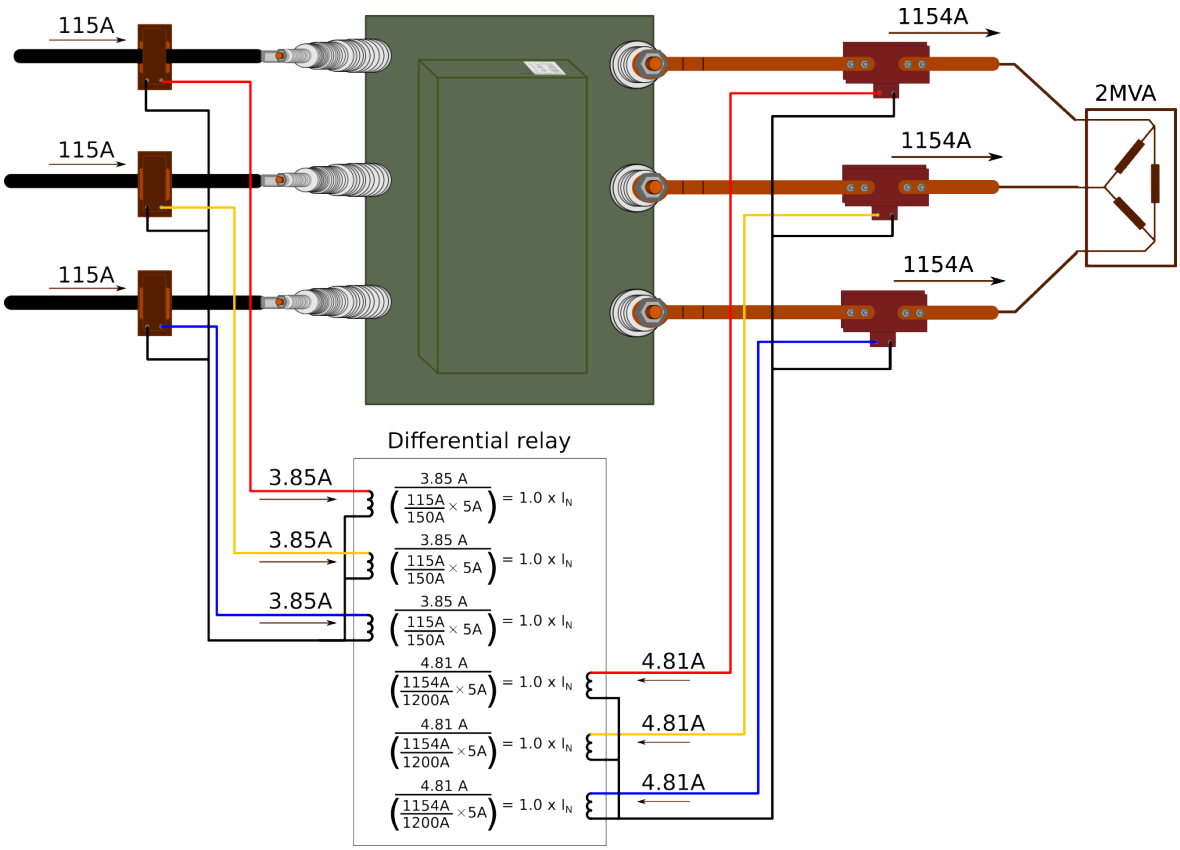

Nominal current matching is only part of the differential protection settings. The vector group of the transformer is also important, since the differential function is interested in the angle difference of the measured current vectors. In this example the transformer's vector group is Yd1, which means that the transformer's HV side is connected to the Y and the LV side to the delta. Therefore, the LV side is in 30-degree lag in relation to the HV side vectors.

The number '1' in the vector group's name comes from the angle in the phase current difference between the HV and the LV side. If one imagines the HV side current's Y placed upside down on the face of a clock (with the Y's leg pointing at 12), the LV side's delta would be pointing at 1. Likewise, '11' means that the LV side is leading 30 degrees; '5' and '7' are just the other ends of the windings thus causing a 180-degree difference between the '1' and '11' clock numbers.

The following example explains transformer current vectors and what a connection might look like.

© Arcteq Relays Ltd
IM00021

Figure. 4.4.18 - 100. Yd1 transformer's internal connection (in theory).

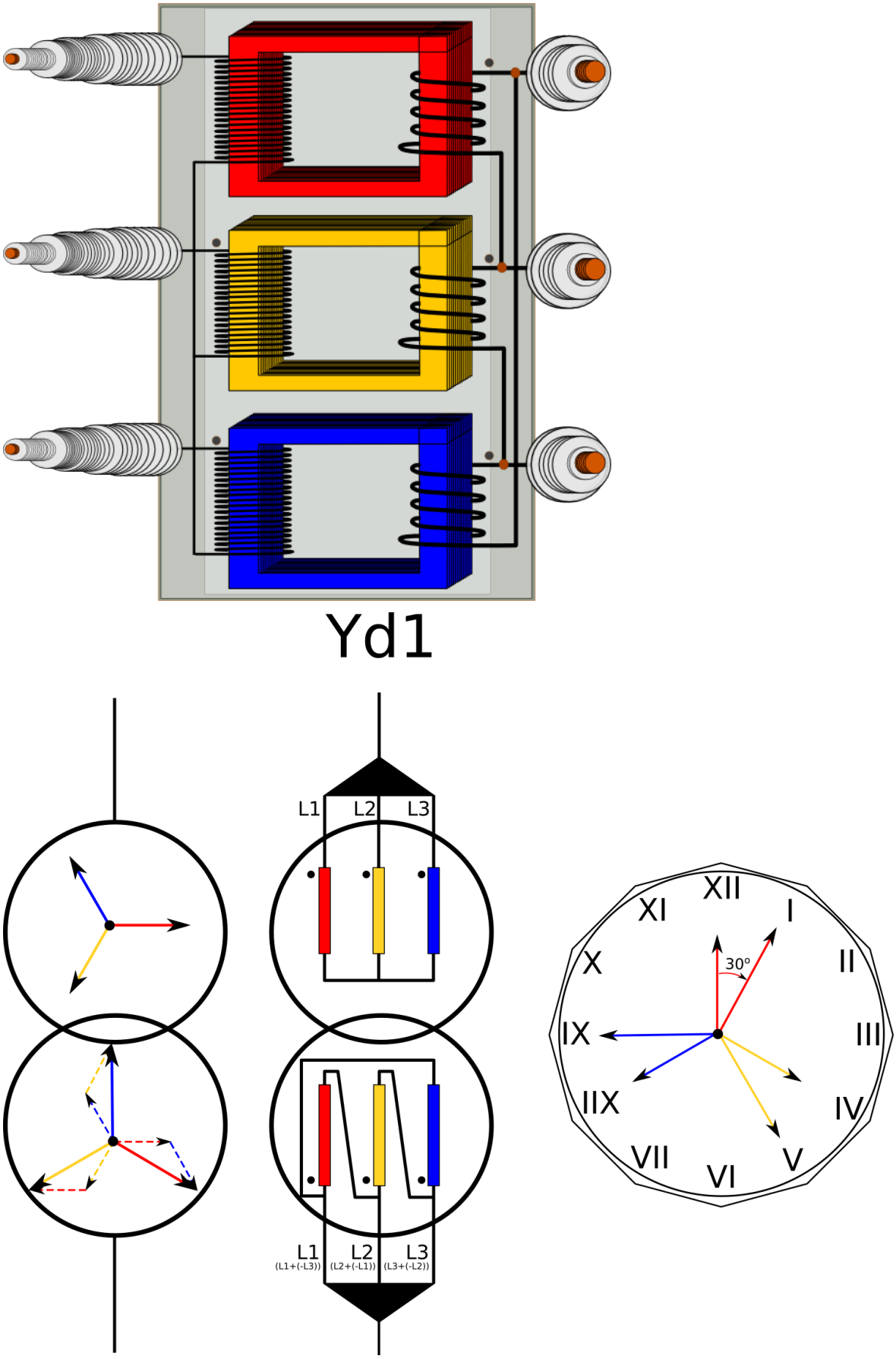

In modern protection relays these standard vector groups (Y or delta, lead or lag) are defined by a setting selection and there is no need for interposing transformers. Even if the transformer's vector group is not standard it should still be settable within the protection relay (such as with zigzag transformers).

In this example, the function translates the delta side currents. The correction applies not only to the angles but also to the amplitudes because the delta side (in p.u.) is relative to the amplitude difference with the Y-connected side.

$$\overline{IL1DS_{LV}} = \frac{(\overline{IL1_{LV}} - \overline{IL2_{LV}})}{\sqrt{3}}$$

$$\overline{IL2DS_{LV}} = \frac{(\overline{IL2_{LV}} - \overline{IL3_{LV}})}{\sqrt{3}}$$

$$\overline{IL3DS_{LV}} = \frac{(\overline{IL3_{LV}} - \overline{IL1_{LV}})}{\sqrt{3}}$$

This process is called vector group matching for the currents (in p.u.) of the transformer. This matching is necessary whenever one side is connected to the delta and another to the Y. Previously in non-numerical relays, this matching was done by interposing CTs which connected the power transformer's Y side to the delta, and the transformer's delta side to the Y. This got the HV and LV side vectors to match each other. Then the currents in the protection relay inputs are summed up. If there is no difference (as the HV and LV side currents negate each other), the pick-up is not triggered. If the currents do have a difference, the current flows to the protection relay input and with enough difference causes a pick-up and a trip. However, as modern differential relays do this transformation by calculating the corrected vector internally, this is also just nice-to-know information not related to the actual operation of the relay.

In Manual Set mode, the differential protection allows adjustment of the angle offset and a magnitude correction factor. If a winding side is configured as delta, the relay automatically applies the inherent 30° phase shift. This means the user must take that into account when calculating the additional manual angle offset. The magnitude correction is used to scale current magnitude's using the set factor. Phase remapping is not supported in this mode, so connection groups that rely on it (e.g. Yy2) cannot be used.

Figure. 4.4.18 - 101. Expected phase shifts from HV side to LV side (a symmetrical situation).

		Phase angles HV side			Phase angles LV side		
	Shift(deg)	IL1	IL2	IL3	IL1"	IL2"	IL3"
Yy0, Yyn0, YNy0, Dd0	0	0	240	120	0	240	120
Yy6,Yyn6, YNy6, YNyn6, Dd6	180	0	240	120	180	60	300
Yd1, YNd1, Dy1, Dyn1	-30	0	240	120	330	210	90
Yd11, YNd11, Dy11, Dyn11	30	0	240	120	30	270	150
Yd5, YNd5, Dy5, Dyn5	-150	0	240	120	210	90	330
Yd7, YNd7, Dy7, Dyn7	150	0	240	120	150	30	270

The direction of the CTs' Y legs on the HV and LV sides affects how the differential calculation method is set. The "add" mode is used when the CT's starpoints are either pointing towards each other or away from each other. The "subtract" mode is used when those points are pointing in the same direction. In this example above the correct setting would be the "add" mode because the CTs in the main circuit are connected to the opposite and thus the measured currents from the CTs are also opposite. The user selects how they want the signals to be shown: the CTs' currents can be negated with the "subtract" option, resulting in a one Y-connected vector diagram.

The images below present the differential algorithm itself; first the "subtract" formulas, then the "add" formulas.

© Arcteq Relays Ltd
IM00021

Figure. 4.4.18 - 102. "Subtract" formula.

$$L1DIFF_{Subt} = |\overline{IL1_{HV}} - \overline{IL1_{LV}}|$$

$$L2DIFF_{Subt} = |\overline{IL2_{HV}} - \overline{IL2_{LV}}|$$

$$L3DIFF_{Subt} = |\overline{IL3_{HV}} - \overline{IL3_{LV}}|$$

Figure. 4.4.18 - 103. "Add" formula.

$$L1DIFF_{Add} = |\overline{IL1_{HV}} + \overline{IL1_{LV}}|$$

$$L2DIFF_{Add} = |\overline{IL2_{HV}} + \overline{IL2_{LV}}|$$

$$L3DIFF_{Add} = |\overline{IL3_{HV}} + \overline{IL3_{LV}}|$$

Figure. 4.4.18 - 104. CTs' starpoints requiring the "Add" mode.

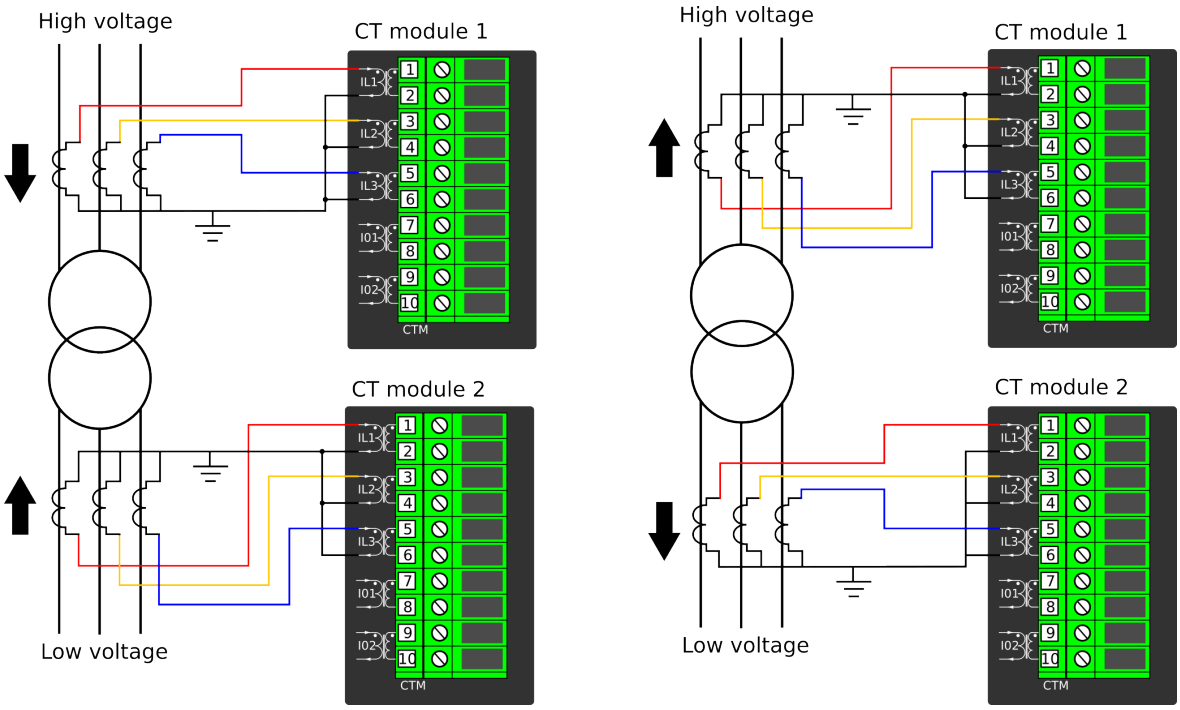

Figure. 4.4.18 - 105. CTs' starpoints requiring the "Subtract" mode.

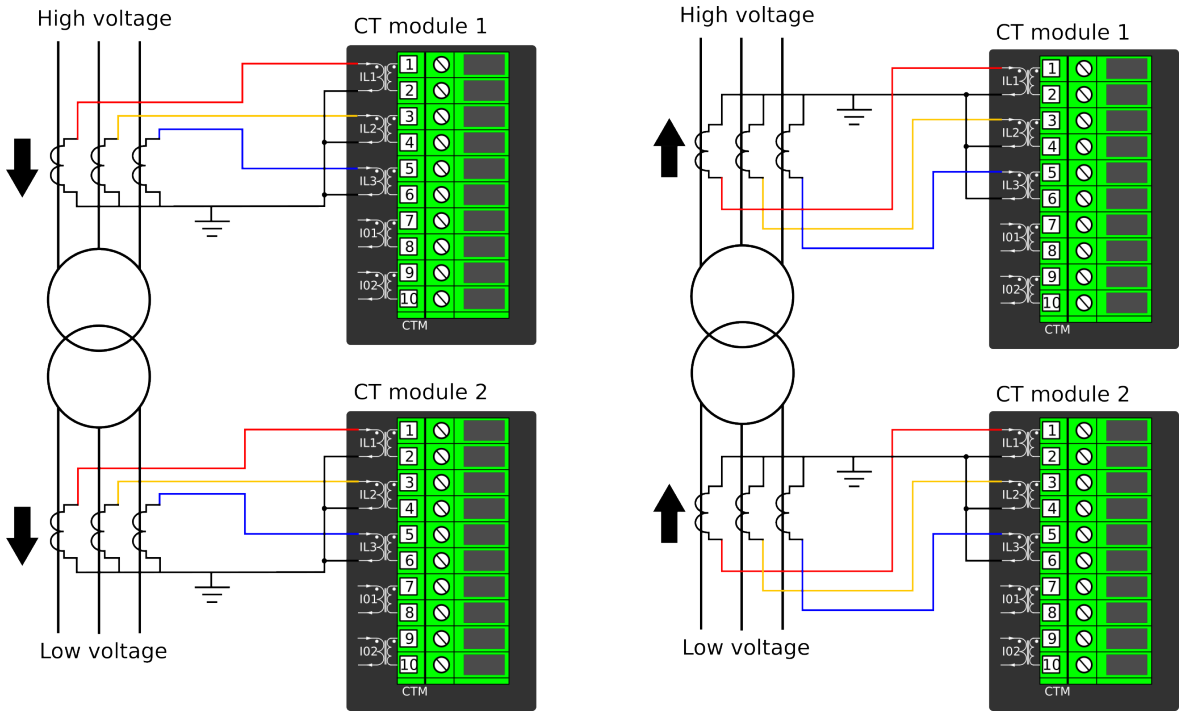

The differential protection function has two separate operating stages:

- Non-restraint stage: This stage utilizes only the above mentioned comparison formulas as its evaluation basis.
- Restraint stage: In this stage, a *bias calculation* is performed for each phase. The purpose of this calculation is to adapt the sensitivity of the differential element to the magnitude of the measured currents, which improves stability under varying load and fault conditions.

Bias calculation can be sensitive or coarse (see the following formulas).

Figure. 4.4.18 - 106. Average mode (sensitive biasing).

$$L1BIAS_{AVG} = \frac{|IL1_{HV}| + |IL1_{LV}|}{2}$$

$$L2BIAS_{AVG} = \frac{|IL2_{HV}| + |IL2_{LV}|}{2}$$

$$L3BIAS_{AVG} = \frac{|IL3_{HV}| + |IL3_{LV}|}{2}$$

Figure. 4.4.18 - 107. Max mode (coarse biasing).

$$L1BIAS_{MAX} = \max\left(|\mathrm{IL1_{HV}}|, |\mathrm{IL1_{LV}}|\right)$$

$$L2BIAS_{MAX} = \max\left(|\mathrm{IL2_{HV}}|, |\mathrm{IL2_{LV}}|\right)$$

$$L3BIAS_{MAX} = \max\left(|\mathrm{IL3_{HV}}|, |\mathrm{IL3_{LV}}|\right)$$

© Arcteq Relays Ltd
IM00021

Next, these two formulas (bias and differential calculation) are combined in a graph: the y-axis presents the measured differential current, and the x-axis presents the calculated bias current. The following graph shows the differential function characteristic, both biased and non-biased.

Figure. 4.4.18 - 108. Differential function characteristic, biased and non-biased.

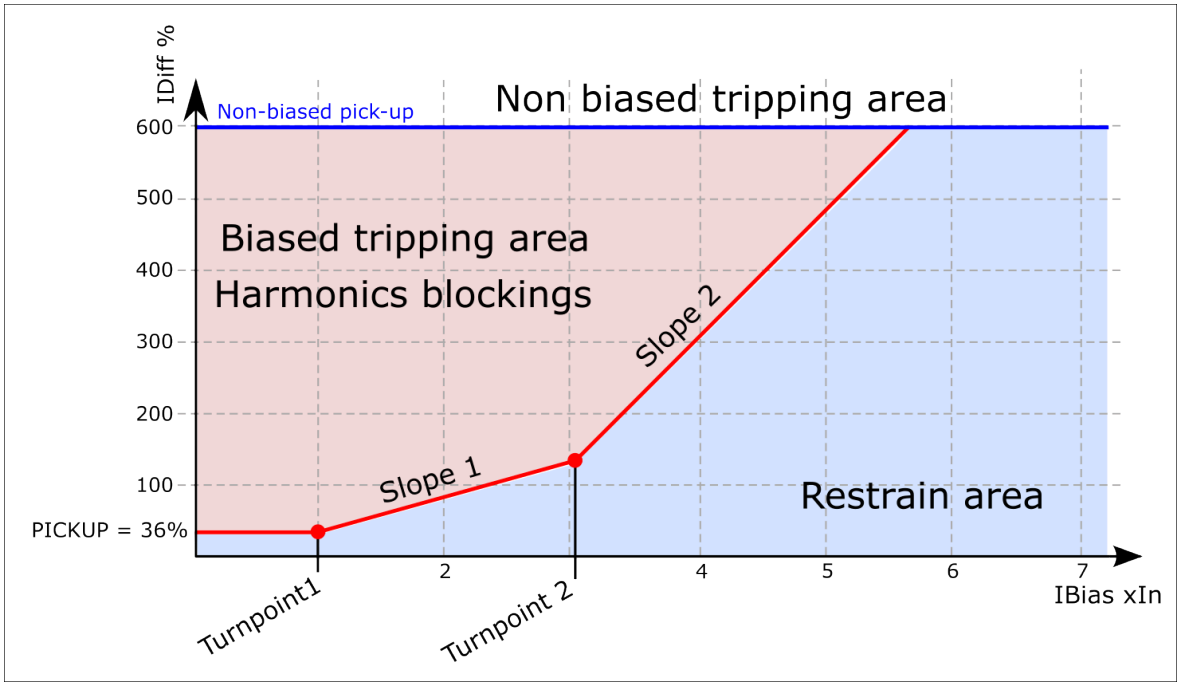

The graph is the function of measured biasing current and the differential protection current. The red line presents the allowed differential current in percentages. In this example the non-biased pick-up is set lower than in a normal transformer application. The settings and the ranges of the differential protection function are presented in the "Settings and signals" section of this topic.

The biasing characteristic is formed with the following formulas:

$$Diff_{bias<TP1} = I_{d>pick-up}$$

$$Diff_{bias\ TP1...TP2} = SL1 \times (Ix - TP1) + I_{d>pick-up}$$

$$Diff_{bias>TP2} = SL2 \times (Ix - TP2) + SL1 \times (TP2 - TP1) + I_{d>pick-up}$$

These form a straight line from zero current to Turnpoint (TP1). From TP1 to TP2 is the first slope (Slope 1) which causes the set biasing to be coarser when the measured current amplitude increases. When the measured current is higher that the TP2 set value, the second slope (Slope 2) is used.

Differential characteristics settings

One needs to understand what the various parts of the characteristics mean in order to set the characteristics for the transformer application.

$Diff_{bias<TP1} = I_{d>pick-up}$

This is the first straight line which represents the differential current created by the transformer's normal operation. It takes into account measurement errors, possible variations caused by the transformer's tap changer (if available), and the various reasons why the application might have caused a different load inside the protected differential zone. In differential relays this is known as the pick-up current ($I_{d>pick\text{-}up}$). It is the basic sensitivity limit: when the measured differential current is below this limit, the transformer still operates normally and the protection does not trigger. In other words, the pick-up current setting must be higher than the combination of all the normal operation factors that cause differential currents.

Slope 1 settings present the protection relay's restrain characteristics over the transformer's load current range. This slope should be effective up to the maximum transformer loading. This value for power transformers is usually around 1.0 to 2.0 × I_n; for large power transformer a typical value is 1.5 × I_n. The purpose is to compensate the measurement errors caused by a relatively high current, including the tap changer effect.

Slope 2 settings are used for biasing the differential characteristics against heavy faults outside the differential zone that can cause heavy saturation on one or both sides of the CTs causing heavy differential current in the measurements even though the transformer itself does not have a fault.

Calculating the generated differential current — The non-biased settings $I_{di>Pick\text{-}up}$

The purpose of this stage is to ensure fast and selective tripping of faults inside the differential zone, and also to ensure a stable operation on heavy outside faults. This stage operates only on the measured absolute differential current and is not blocked by harmonics or bias restraints. The setting of the stage should be based on the weakest full saturation of the CT under worst-case fault conditions because then only the other side current is measured and all current seen is differential current.

Figure. 4.4.18 - 109. Example differential characteristics

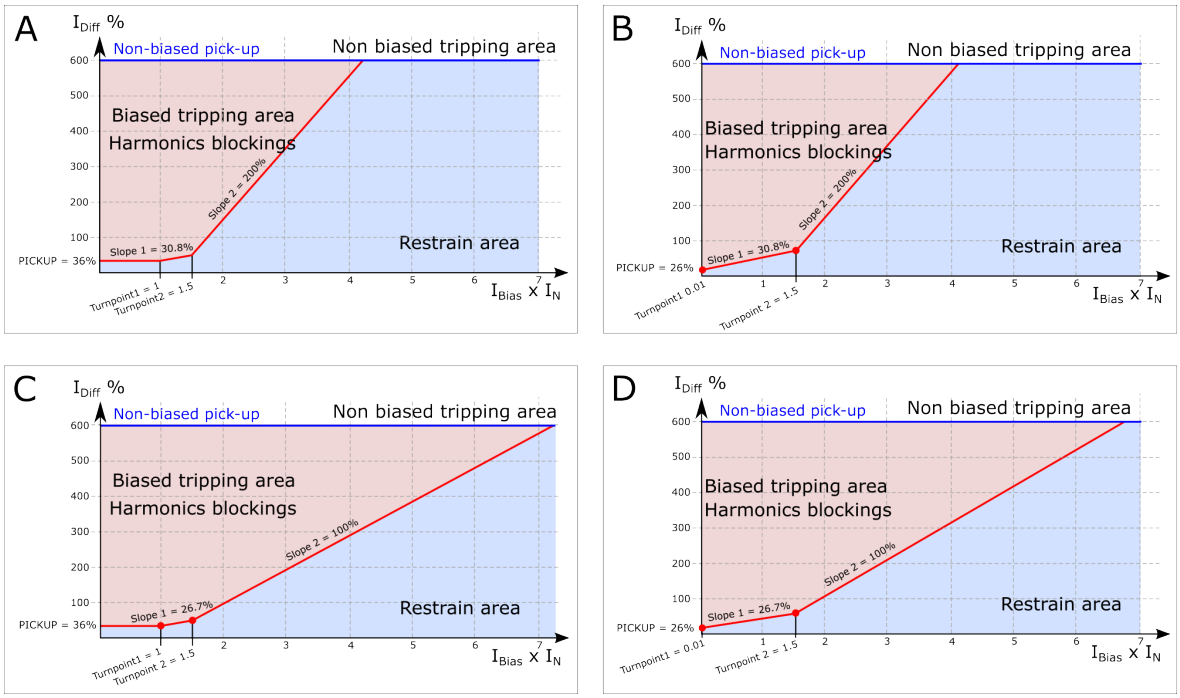

The four characteristics (the image above) present the setting variations based to the Average restraint calculation mode (figures A and B) and the Maximum restraint calculation modes (figures C and D). The characteristics are set to be equally sensitive in each of them. You can also see the variations in Turnpoint 1 settings: in Figures A and C it is set at 1.0 × I_n, whereas in Figures B and D it is set at 0.01 × I_n.

© Arcteq Relays Ltd
IM00021

Zero sequence compensation for external earth faults

A very common transformer type is the kind where the star side (HV, LV, or both) is earthed and thus forms a route outside the differential zone (see the image below).

Figure. 4.4.18 - 110. Transformer earthing settings that do not compensate for external earth faults.

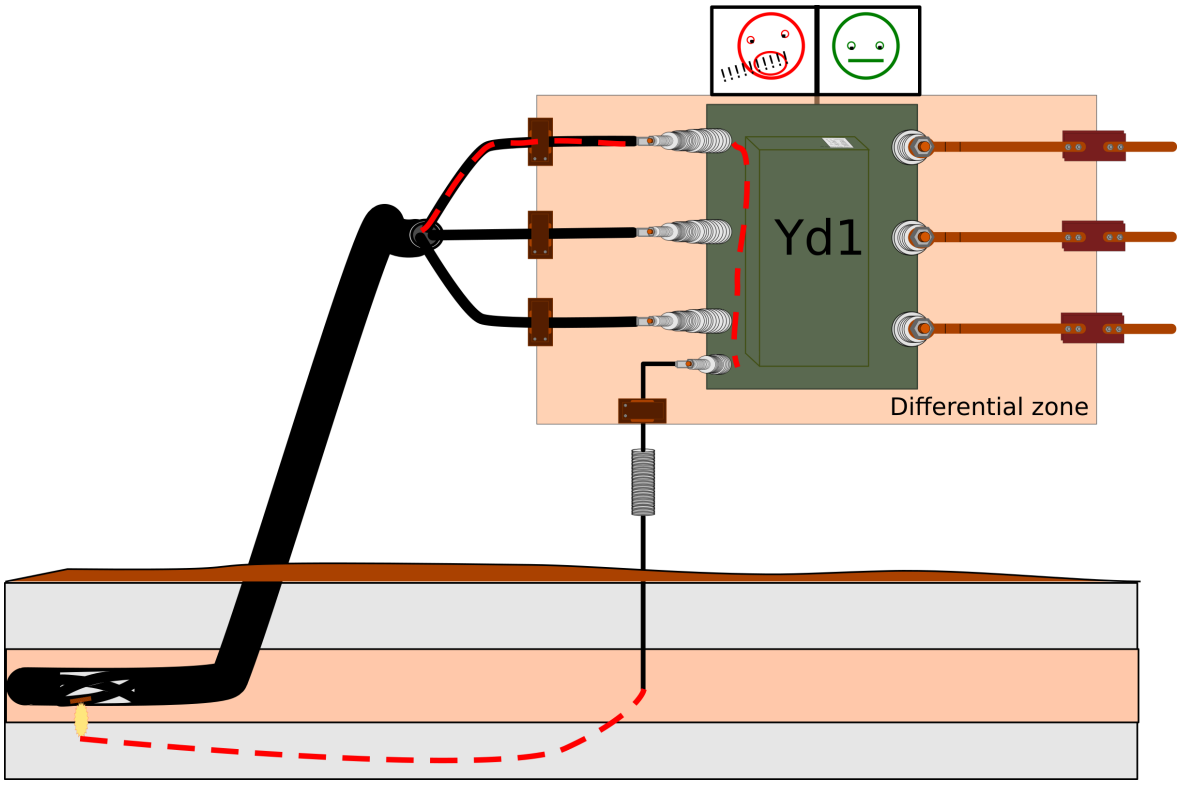

The differential relay looks at this situation and sees a fault inside the differential zone. This is because the other side is not affected at all by the fault (or only very little), and the relay sees a high current entering but not exiting the zone.

In many cases the zero sequence current is monitored by the CT in the earthing.

Earthing (directly or via a resistor) forms a route outside the differential zone.

When an external earth fault happens, only the earthed side of the transformer is involved in the fault.

The differential earthing requires the earthing to be known: if not compensated, any low-impedance earth fault outside the differential zone causes a differential current and possibly trips the differential protection. This is why the calculated zero sequence compensation is used. The vector group selection has either "N" or "n" to signify either HV side or LV side earthing. The selection then deducts the calculated zero sequence current from the currents (in p.u.) before differential calculation and thus negates the effect of an external earth fault. Correctly selected transformer settings prevent the differential function from being tripped by out-of-zone earth faults (see the image below).

Figure. 4.4.18 - 111. Transformer earthing settings that compensates for external earth faults.

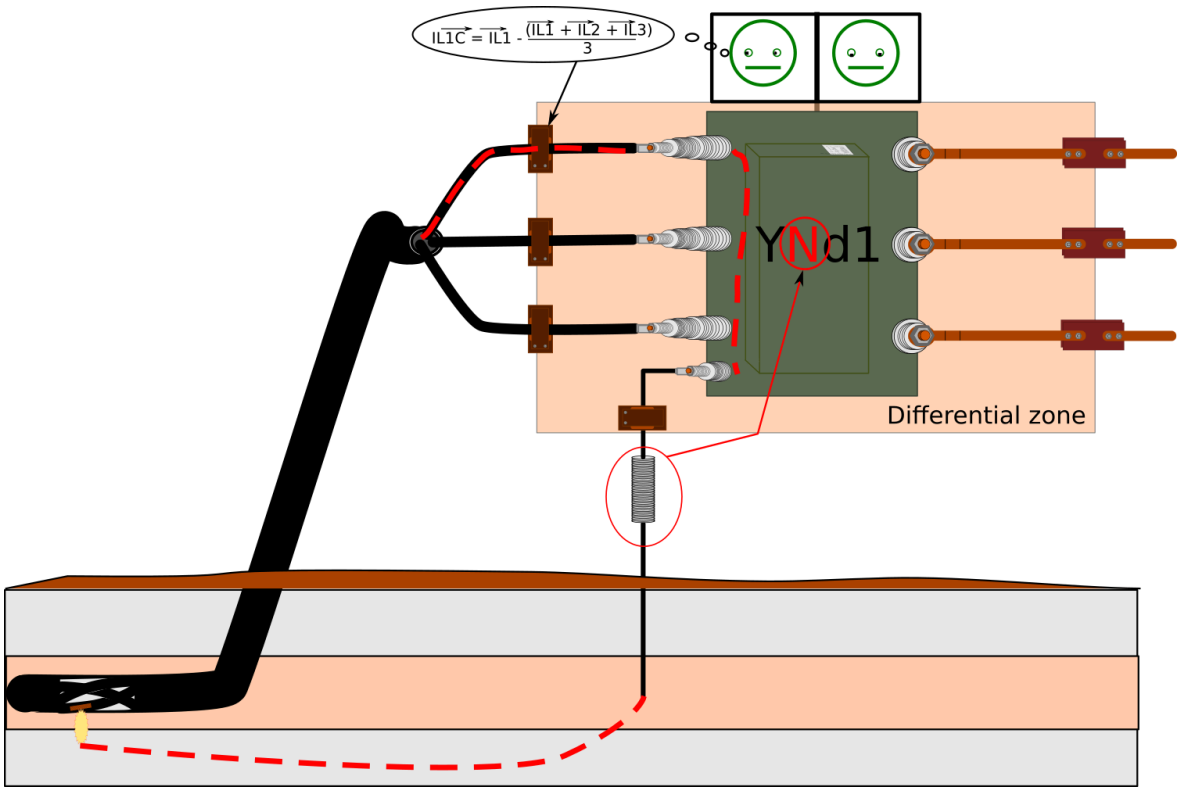

When the transformer settings are correct, the differential relay compensates the zero sequence current and does not trip due to earth faults outside the differential zone.

Earthing (directly or via a resistor) forms a route outside the differential zone.

When an external earth fault happens, only the earthed side of the transformer is involved in the fault.

The "N" or "n" selection applies the correction and eliminates the zero sequence effect with the following formulas:

$$\overrightarrow{IL1}_{corr} = \overrightarrow{IL1} - \frac{\overrightarrow{IL1} + \overrightarrow{IL2} + \overrightarrow{IL3}}{3}$$

$$\overrightarrow{IL2}_{corr} = \overrightarrow{IL2} - \frac{\overrightarrow{IL1} + \overrightarrow{IL2} + \overrightarrow{IL3}}{3}$$

$$\overrightarrow{IL3}_{corr} = \overrightarrow{IL3} - \frac{\overrightarrow{IL1} + \overrightarrow{IL2} + \overrightarrow{IL3}}{3}$$

Note! When you enable the zero sequence compensation by selecting the "N" or "n" in the transformer vector group, the sensitivity to single-phase one end fault decreases by a third simultaneously. This is why restricted earth fault protection (I0>, REF) should be enabled for the side where the zero sequence is compensated. However, enabling the REF protection requires that both the phase current measurements and the starpoint current are available and can be connected to the relay's residual current channel on the corresponding (HV/LV) side measurement.

© Arcteq Relays Ltd
IM00021

Restricted earth fault

When the transformer's earthed side is compensated with afore-mentioned zero sequence compensation, that side will be a third (appr. 33 %) less sensitive in detecting single-phase faults inside the differential zone. For this reason it is advised that the restricted earth fault (REF) stage is activated on the transformer side that compensates the zero sequence current. Additionally, it should be enabled whenever the Y side of the starpoint is earthed; normal phase differential protection cannot be set to provide the maximum sensitivity to detect single-phase (earth) faults within the differential are because the properties dependant on the transformer and the application that were described in the previous section. This differential stage monitors the incoming calculated residual current and compares it to the outgoing starpoint current. If the single-phase (earth) fault occurs outside the differential zone, this function does not operate; if the fault occurs inside the differential zone, this function operates quickly. This protection's sensitivity to earth faults only within the protection zone is referred to as the "restricted earth fault protection".

The transformer differential functions offers two stages of low-impedance, restricted earth fault protection.

The operating characters of the restricted earth fault function (I0d>) on both the high voltage and the low voltage side are more similar to each other than to the percentage characteristics presented by the Idb> function, even though both sides are independent and can be set freely. The calculation of differential and biasing currents on both sides is as follows (the HV side on the left, the LV side on the right).

$HV_{I0d\ bias\ avg} = \frac{\lvert(\overrightarrow{IL1}_{HV} + \overrightarrow{IL2}_{HV} + \overrightarrow{IL3}_{HV}) + \overrightarrow{I0}_{HV\ meas}\rvert}{2}$	$LV_{I0d\ bias\ avg} = \frac{\lvert(\overrightarrow{IL1}_{LV} + \overrightarrow{IL2}_{LV} + \overrightarrow{IL3}_{LV}) + \overrightarrow{I0}_{LV\ meas}\rvert}{2}$
$HV_{I0d\ bias\ max} = \max((\overrightarrow{IL1}_{HV} + \overrightarrow{IL2}_{HV} + \overrightarrow{IL3}_{HV}), \overrightarrow{I0}_{HV\ meas})$	$LV_{I0d\ bias\ max} = \max((\overrightarrow{IL1}_{LV} + \overrightarrow{IL2}_{LV} + \overrightarrow{IL3}_{LV}), \overrightarrow{I0}_{LV\ meas})$
$HV_{I0d>\ diff\ add} = \lvert(\overrightarrow{IL1}_{HV} + \overrightarrow{IL2}_{HV} + \overrightarrow{IL3}_{HV}) + \overrightarrow{I0}_{HV\ meas}\rvert$	$LV_{I0d>\ diff\ add} = \lvert(\overrightarrow{IL1}_{LV} + \overrightarrow{IL2}_{LV} + \overrightarrow{IL3}_{LV}) + \overrightarrow{I0}_{LV\ meas}\rvert$
$HV_{I0d>\ diff\ substract} = \lvert(\overrightarrow{IL1}_{HV} + \overrightarrow{IL2}_{HV} + \overrightarrow{IL3}_{HV}) - \overrightarrow{I0}_{HV\ meas}\rvert$	$LV_{I0d>\ diff\ subtract} = \lvert(\overrightarrow{IL1}_{LV} + \overrightarrow{IL2}_{LV} + \overrightarrow{IL3}_{LV}) - \overrightarrow{I0}_{LV\ meas}\rvert$

Similarly to the phase differential stages, both sides with the restricted earth fault stages have options between the average and the maximum bias current calculation, as well as the option between the add and the subtract current calculation. The use of these stages depends on the CTs' installation directions and the desired sensitivity for bias calculation.

In the transformer differential stage the reference current for the REF protection is always the protected side nominal current, which is calculated in the relay's Transformer status monitoring (TRF) module.

Blockings from harmonics (2nd and 5th)

In transformer protection harmonics are always present in energizing situations: they are generated by the high current in the transformer inductances when the coils are energized. They are also preent in the currents during overfluxing and overvoltage situations. Energizing situations generate even harmonics: the 2nd harmonic is the most commonly used harmonic in inrush blocking. Overvoltage (and overexcitation) situations generate odd harmonics: the 5th harmonic is mainly used for blocking (the 3rd harmonic is also present in Y windings but absent in delta windings which is why the 5th harmonic has been chosen for overfluxing and excitation detection). In this chapter 'blocking' refers to the Idb> (the biased differential) stage and it has both these blocking (2nd and 5th) applied internally. If the Idi> stage (the non-biased differential) needs to be blocked, external blocking must be used.

Differential function details

Figure. 4.4.18 - 112. Simplified function block diagram of the transformer differential function.

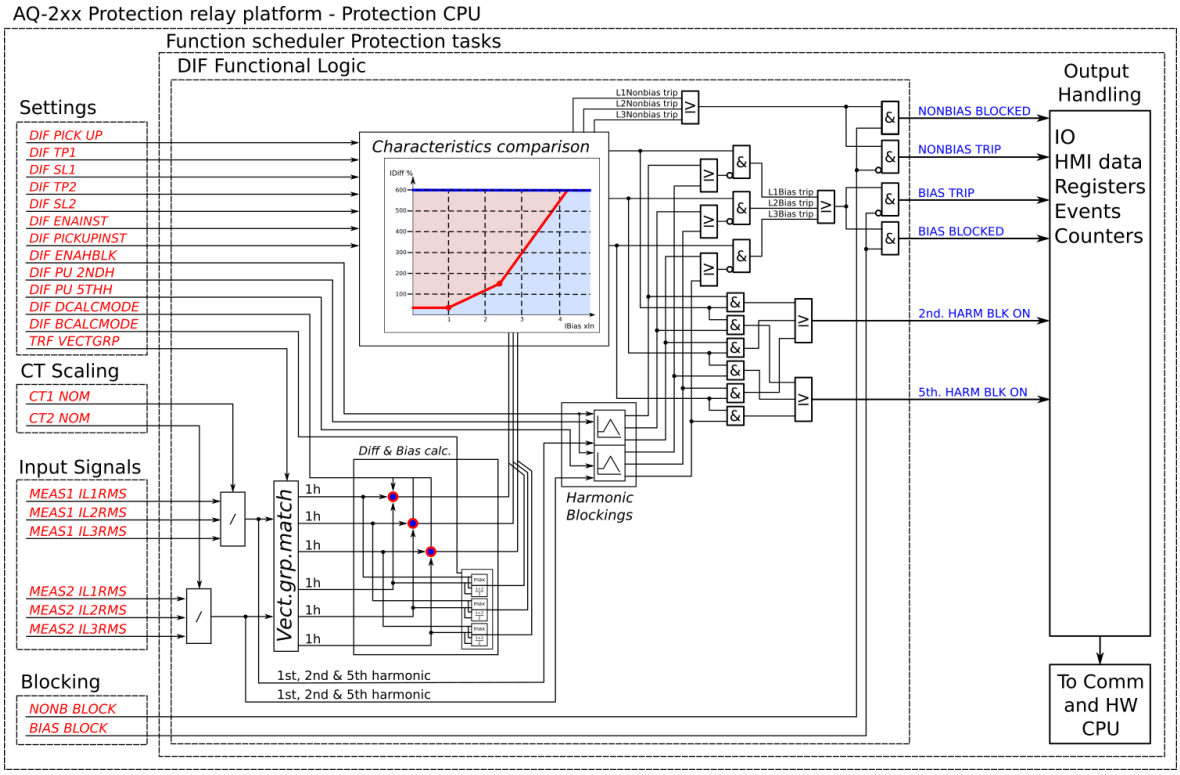

The transformer differential function outputs TRIP and BLOCKED signals from the biased and non-biased functions as well as the 2nd and 5th harmonic block activation signals. These signals can be used in protection applications.

Settings and signals

The settings of the differential function are a combination of transformer monitor and differential stage function settings. The following table shows the function's settings, including the general settings (in p.u.) used for pre-calculations.

Table. 4.4.18 - 166. Settings related to the differential function's pre-calculation.

Name	Range	Step	Default	Function	Description
Idx> LN mode	• On • Blocked • Test • Test/ Blocked • Off	-	On	-	Set mode of DIF block. This parameter is visible only when *Allow setting of individual LN mode* is enabled in *General* menu.

© Arcteq Relays Ltd
IM00021

Name	Range	Step	Default	Function	Description
Idx> force status to	• Normal • Idb Blocked • Idb Trip • Idi Blocked • Idi Trip • H2block On • H5block On • HV I0d> Block On • HV I0d> Trip On • LV I0d> Block On • LV I0d> Trip On	-	Normal	-	Force the status of the function. Visible only when *Enable stage forcing* parameter is enabled in *General* menu.
Idx> LN behaviour	• On • Blocked • Test • Test/ Blocked • Off	-	-	-	Displays the mode of DIF block. This parameter is visible only when *Allow setting of individual LN mode* is enabled in *General* menu.
Transformer nominal	0.1...500.0MVA	0.1MVA	1.0MVA	All	The nominal MVA of the transformer. This value is used to calculate the nominal currents onf both the HV and the LV side.
HV side nominal voltage	0.1…500.0kV	0.1kV	110.0kV	All	The HV side nominal voltage of the transformer. This value is used to calculate the nominal currents of the HV side.
LV side nominal voltage	0.1…500.0kV	0.1kV	110.0kV	All	The LV side nominal voltage of the transformer. This value is used to calculate the nominal currents of the LV side.
Transformer Zk%	0.01…25.00%	0.01%	3.00%	Info	The transformer's short-circuit impedance in percentages. Used for calculating short-circuit current.
Transformer nom. freq.	10…75Hz	1Hz	50Hz	Info	The transformer's nominal frequency. Used for calculating the transformer's nominal short-circuit inductance.

Name	Range	Step	Default	Function	Description
Transf. vect. group	• Manual • Yy0 • Yyn0 • YNy0 • YNyn0 • Yy6 • Yyn6 • YNy6 • YNyn6 • Yd1 • YNd1 • Yd7 • YNd7 • Yd11 • YNd11 • Yd5 • YNd5 • Dy1 • Dyn1 • Dy7 • Dyn7 • Dy11 • Dyn11 • Dy5 • Dyn5 • Dd0 • Dd6	-	Yy0	- transformer status monitoring - transformer differential	The selection of the transformer's vector group. The selection values (1–26) are predefined so that the scaling and vector matching are applied in the relay automatically when the correct vector group is selected. The predefinitions assume that the HV side is connected to the CT1 module and that the LV side is connected to the CT2 module. If the protected transformer vector group is not found in the predefined list, it can be manually set by selecting the option "Manual set".
HV side Star or Zigzag/ Delta	• Star/Zigzag • Delta	-	Star/ Zigzag	- transformer status monitoring - transformer differential	The selection of the HV side connection. Can be selected between star or zigzag and delta. This selection is visible only if the option "Manual set" is selected for the vector group setting.
HV side grounded	• Not grounded • Grounded	-	Not grounded	- transformer status monitoring - transformer differential	The selection of whether or not the zero sequence compensation is applied in the HV side current calculation. The selection is visible only if the option "Manual set" is selected for the vector group setting.
HV side lead or lag LV	• Lead • Lag	-	Lead	- transformer status monitoring - transformer differential	The selection of whether the HV side leads or lags the LV side. The selection is visible only if the option "Manual set" is selected for the vector group setting.
LV side Star/ Zigzag or Delta	• Star/Zigzag • Delta	-	Star/ Zigzag	- transformer status monitoring - transformer differential	The selection of the LV side connection. Can be selected between star or zigzag and delta. This selection is visible only if the option "Manual set" is selected for the vector group setting.
LV side grounded	• Not grounded • Grounded	-	Not grounded	- transformer status monitoring - transformer differential	The selection of whether or not the zero sequence compensation is applied in the LV side current calculation. The selection is visible only if the option "Manual set" is selected for the vector group setting.

© Arcteq Relays Ltd
IM00021

Name	Range	Step	Default	Function	Description
LV side lead or lag HV	• Lead • Lag	-	Lead	- transformer status monitoring - transformer differential	The selection of whether the LV side leads or lags the HV side. The selection is visible only if the option "Manual set" is selected for the vector group setting.
HV-LV side phase angle	0.0...360.00deg	0.1deg	0.0deg	- transformer status monitoring - transformer differential	The angle correction factor for HV/LV sides, looked from the HV side. The setting is visible only if the option "Manual set" is selected for the vector group setting.
HV-LV side mag correction	0.0...100.0×I_n	0.1×I_n	1.0×I_n	- transformer status monitoring - transformer differential	The magnitude correction for the HV-LV side currents (in p.u.), if the currents are not directly matched through the calculations of the nominal values. The selection is visible only if the option "Manual set" for the vector group setting.
Check online HV-LV configuration	• - • Check	-	-	- transformer status monitoring - transformer differential	The selection of whether or not the function checks the current going through the transformer and then compares it to the settings. For this to work, the transformer needs to have a current flowing on both sides and "see" no faults. The selection is visible only if the option "Manual set" is selected for the vector group setting.
Enable I0d> (REF) HV side	• Disabled • Enabled	-	Disabled	- transformer status monitoring - transformer differential	The selection of whether the restricted earth fault stage on the HV side is enabled or disabled.
HV side starpoint meas.	• I_{01} • I_{02}	-	I_{01}	- transformer status monitoring - transformer differential	The selection of the starpoint measurement channel for the restricted earth fault protection on the HV side. This setting is only visible if the option "Enabled" is selected for the "Enable I0d> (REF) HV side" setting.
Enable I0d> (REF) LV side	• Disabled • Enabled	-	Disabled	- transformer status monitoring - transformer differential	The selection of whether the restricted earth fault stage on the LV side is enabled or disabled.
LV side starpint meas.	• I_{01} • I_{02}	-	I_{01}	- transformer status monitoring - transformer differential	The selection of the starpoint measurement channel for the restricted earth fault protection on the LV side. This setting is only visible if the option "Enabled" is selected for the "Enable I0d> (REF) LV side" setting.

Setting group selection controls the operating characteristics of the function, i.e. the user or user-defined logic can change function parameters while the function is running.

Table. 4.4.18 - 167. Settings for the operating characteristics.

Name	Range	Step	Default	Description
Differential calculation mode	• Add • Subtract	-	Subtract	The calculation mode of the differential current. The mode selection depends on the CTs' installation direction and the desired current directions. If the current flow on both sides is in the same direction, the differential current is subtracted. If the current flows are in the opposite directions, the differential current is added.
Bias calculation mode	• Average • Maximum	-	Average	The calculation mode of the biasing current. With the average mode the operation may be set to be more sensitive. With the maximum mode the bias is always higher and thus provides a more stable operation.
Idb> Pick-up	0.01…100.00%	0.01%	10.00%	The base sensitivity for the differential characteristics.
Turnpoint 1	0.01…50.00×I_n	0.01×I_n	1.00×I_n	Turnpoint 1 for the differential characteristics.
Slope 1	0.01…250.00%	0.01%	10.00%	Slope 1 for the differential characteristics.
Turnpoint 2	0.01…50.00×I_n	0.01×I_n	3.00×I_n	Turnpoint 2 for the differential characteristics.
Slope 2	0.01…250.00%	0.01%	200.00%	Slope 2 of the differential characteristics-
Enable harmonic blocking	• No harmonic blocking • 2nd harmonic blocking • 5th harmonic blocking • 2nd and 5th harmonic blocking	-	2nd harmonic blocking	The selection of the internal blockings to be used for the detection of transformer normal operations that cause differential currents.
2nd harmonic blocking pick-up	0.01…50.00%	0.01%	15.00%	The pick-up detection for the 2nd harmonic blocking stage. This setting is only visible if the "Enable harmonic blocking" setting is set to "2nd harm" or "2nd and 5th harm".
5th harmonic blocking pick-up	0.01…50.00%	0.01%	35.00%	The pick-up detection for the 5th harmonic blocking stage. This setting is only visible if the "Enable harmonic blocking" setting is set to "5th harm" or "2nd and 5th harm".
2nd harmonic maximum uptime	0.000…10.000 s	0.010 s	0.000 s	Determines the maximum time the detection of 2nd harmonic can block the operation of the function. Not in use when set to zero.
5th harmonic maximum uptime	0.000…10.000 s	0.010 s	0.000 s	Determines the maximum time the detection of 5th harmonic can block the operation of the function. Not in use when set to zero.

© Arcteq Relays Ltd
IM00021

Name	Range	Step	Default	Description
Enable Idi> stage	• Disabled • Enabled	-	Enabled	The selection of whether the non-biased and the non-blocked differential stage is enabled or disabled.
Idi> Non-biased pick-up	200.00…1500.00%	0.01%	600.00%	The pick-up setting for the non-biased and non-blocked differential stage. This setting is only visible if the "Enable Idi> stage" is disabled.
HV I0d> Pick-up	0.01…100.00%	0.01%	10.00%	The base sensitivity for the HV side restricted earth fault differential characteristics. This setting is only visible if the "Enable I0d> (REF) HV side" setting is enabled.
HV I0d> Turnpoint 1	0.01…50.00×I_n	0.01×I_n	1.00×I_n	Turnpoint 1 for the HV side restricted earth fault differential characteristics. This setting is only visible if the "Enable I0d> (REF) HV side" setting is enabled.
HV I0d> Slope 1	0.01…250.00%	0.01%	10.00%	Slope 1 of the HV side restricted earth fault differential characteristics. This setting is only visible if the "Enable I0d> (REF) HV side" setting is enabled.
HV I0d> Turnpoint 2	0.01…50.00×I_n	0.01×I_n	3.00×I_n	Turnpoint 2 for the HV side restricted earth fault differential characteristics. This setting is only visible if the "Enable I0d> (REF) HV side" setting is enabled.
HV I0d> Slope 2	0.01…250.00%	0.01%	200.00%	Slope 2 of the HV side restricted earth fault differential characteristics. This setting is only visible if the "Enable I0d> (REF) HV side" setting is enabled.
LV I0d> Pick-up	0.01…100.00%	0.01%	10.00%	The base sensitivity for the LV side restricted earth fault differential characteristics. This setting is only visible if the "Enable I0d> (REF) LV side" setting is enabled.
LV I0d> Turnpoint 1	0.01…50.00×I_n	0.01×I_n	1.00×I_n	Turnpoint 1 for the LV side restricted earth fault differential characteristics. This setting is only visible if the "Enable I0d> (REF) LV side" setting is enabled.
LV I0d> Slope 1	0.01…250.00%	0.01%	10.00%	Slope 1 of the LV side restricted earth fault differential characteristics. This setting is only visible if the "Enable I0d> (REF) LV side" setting is enabled.
LV I0d> Turnpoint2	0.01…50.00×I_n	0.01×I_n	3.00×I_n	Turnpoint 2 for the LV side restricted earth fault differential characteristics. This setting is only visible if the "Enable I0d> (REF) LV side" setting is enabled.
LV I0d> Slope 2	0.01…250.00%	0.01%	200.00%	Slope 2 of the LV side restricted earth fault differential characteristics. This setting is only visible if the "Enable I0d> (REF) LV side" setting is enabled.

Table. 4.4.18 - 168. Calculations of the transformer differential function.

Name	Description
L1Bias	The calculated phase L1 bias current
L2Bias	The calculated phase L2 bias current
L3Bias	The calculated phase L3 bias current
L1Diff	The calculated phase L1 differential current

Name	Description
L2Diff	The calculated phase L2 differential current
L3Diff	The calculated phase L3 differential current
L1Char	The calculated phase L1 maximum differential current allowed with current bias level
L2Char	The calculated phase L1 maximum differential current allowed with current bias level
L3Char	The calculated phase L1 maximum differential current allowed with current bias level
HV I0d> Bias current	The calculated HV side restricted earth fault bias current
HV I0d> Diff current	The calculated HV side restricted earth fault differential current
HV I0d> Char current	The calculated HV side restricted earth fault differential current allowed with current bias level
LV I0d> Bias current	The calculated LV side restricted earth fault bias current
LV I0d> Diff current	The calculated LV side restricted earth fault differential current
LV I0d> Char current	The calculated LV side restricted earth fault differential current allowed with current bias level

Table. 4.4.18 - 169. Output signals of the transformer differential function.

Name	Description
Idb> Bias Trip	The TRIP output signal from the biased differential stage
Idi> Nobias Trip	The TRIP output signal from the non-biased and non-blocked differential stage
Idb> Bias Blocked	The BLOCKED output from the biased differential stage (external blocking)
Idi> Bias Blocked	The BLOCKED output from the non-biased and non-blocked differential stage (external blocking)
Idb> 2nd harm block on	The output of the 2nd harmonic activation signal
Idb> 5th harm block on	The output of the 5th harmonic activation signal
HV I0d> Trip	The TRIP output signal from the biased restricted earth fault differential stage on the HV side
HV I0d> Trip	The BLOCKED output signal from the biased restricted earth fault differential stage on the HV side
LV I0d> Trip	The TRIP output signal from the biased restricted earth fault differential stage on the LV side
LV I0d> Trip	The BLOCKED output signal from the biased restricted earth fault differential stage on the LV side

© Arcteq Relays Ltd
IM00021

Function blocking

The blocking signal is evaluated at the start of each program cycle. The blocking signals are connected to the function's dedicated input, which can be configured in the *IO → Blocking Input Control* tab of the function.

- When the pick-up element activates and the blocking signal is not active, a TRIP signal is generated.
- When the pick-up element activates and the blocking signal is active, a BLOCKED signal is generated, and the function does not process the event further.

The blocking signal needs to reach the device minimum of 5 ms before the set operating delay has passed in order for the blocking to activate in time.

Events and registers

The transformer differential function (abbreviated "DIF" in event block names) generates events from the status changes in the events listed below. The user can select which event messages are stored in the main event buffer: ON, OFF, or both. The events triggered by the function are recorded with a time stamp.

The function's outputs can be used for direct I/O controlling and user logic programming. The function also provides a resettable cumulative counter for the TRIP, 2nd Harmonic Block, 5th Harmonic Block, External Block events.

Table. 4.4.18 - 170. Event messages.

Event block name	Event names
DIF1	Idb> Trip ON/OFF
DIF1	Idb> Blocked (ext) ON/OFF
DIF1	Idi> Trip ON/OFF
DIF1	Idi> Blocked (ext) ON/OFF
DIF1	2nd Harmonic Block ON/OFF
DIF1	5th Harmonic Block ON/OFF
DIF1	L1 2nd harmonic ON/OFF
DIF1	L2 2nd harmonic ON/OFF
DIF1	L3 2nd harmonic ON/OFF
DIF1	L1 5th harmonic ON/OFF
DIF1	L2 5th harmonic ON/OFF
DIF1	L3 5th harmonic ON/OFF
DIF1	HV I0d> Block ON/OFF
DIF1	HV I0d> Trip ON/OFF
DIF1	LV I0d> Block ON/OFF

Event block name	Event names
DIF1	LV I0d> Trip ON/OFF

The function registers its operation into the last twelve (12) time-stamped registers. The table below presents the structure of the function's register content.

Table. 4.4.18 - 171. Register content.

Name	Description
Date and time	dd.mm.yyyy hh:mm:ss.mss
Event	Event name
L1 bias current	Phase L1 bias current
L1 diff. current	Phase L1 maximum differential current
L1 char. current	Phase L1 maximum differential current with bias
L2 bias current	Phase L2 bias current
L2 diff. current	Phase L2 maximum differential current
L2 char. current	Phase L2 maximum differential current with bias
L3 bias current	Phase L3 bias current
L3 diff. current	Phase L3 maximum differential current
L3 char. current	Phase L3 maximum differential current with bias
HV I0d> bias current	HV side REF bias current
HV I0d> differential current	HV side REF differential current
HV I0d> characteristics current	HV side REF maximum differential current with bias
LV I0d> bias current	LV side REF bias current
LV I0d> differential current	LV side REF differential current
LV I0d> characteristics current	LV side REF maximum differential current with bias
Setting group in use	Setting group in use
Ftype	Detected fault type (faulty phases)

4.4.19 Underexcitation protection (Q<; 40)

Synchronous machines require a certain amount of excitation to stay stable. If the excitation drops too low a synchronous machine can drop out of step. One way for the function to sense underexcitation is by measuring reactive power. When the generator induces capacitive power, the value of reactive power is negative (and thus the excitation current can be low enough for the synchronous machine to drop out of step). Underexcitation protection supervises capacitive power and picks up when the set kvar value is exceeded.

© Arcteq Relays Ltd
IM00021

Measured input

The function block uses three-phase reactive power values and three-phase active power values. Please refer to "Power and energy calculation" chapter for a detailed description of power calculation.

Table. 4.4.19 - 172. Measurement inputs of the Q< function.

Signal	Description
3PH Reactive power (Q)	Total three-phase reactive power
3PH Active Power (P)	Total three-phase active power

General settings

The following general settings define the general behavior of the function. These settings are static i.e. it is not possible to change them by editing the setting group.

Table. 4.4.19 - 173. General settings of the function.

Name	Range	Default	Description
Q< LN mode	• On • Blocked • Test • Test/ Blocked • Off	On	Set mode of UEX block. This parameter is visible only when *Allow setting of individual LN mode* is enabled in *General* menu.
Q< force status to	• Normal • Start • Trip • Blocked	Normal	Force the status of the function. Visible only when *Enable stage forcing* parameter is enabled in *General* menu.
Q< measurement selection	• POW1 • POW2	POW1	Defines which side of power measurement is used. POW1 and POW2 can be set up at *Measurements → Power and energy measurements*.

Pick-up settings

Setting group selection controls the operating characteristics of the function, i.e. the user or user-defined logic can change function parameters while the function is running.

The reset ratio of 97 % is built into the function and is always relative to the Q_{set}< value.

Table. 4.4.19 - 174. Mode selection parameter.

Name	Range	Step	Default	Description
Qset mode	• Fixed • P-dependent • Dynamic S dependent	-	Fixed	Decides whether the pick-up area is defined only by the Q_{set}< parameter or by measured active power (P).

Table. 4.4.19 - 175. Pick-up settings in "Fixed" mode.

Name	Range	Step	Default	Description
Pick-up setting Qset<	-100 000…0.0 kvar	0.01 kvar	-100 kvar	In Fixed mode: sets the pick-up value for the function. In P-dependent mode: chooses the reactive power for the first point.
k multiplier	0.01…3.00	0.01	1.00	Underexcitation operating area shrinks or expands based on the generator's measured voltage level. At 100% of the nominal voltage (Un), the underexcitation limit operates as set. However, at a 90% nominal voltage level, the pick-up setting point (Q) is reduced by a multiplier of 0.9x. As the generator and network voltage level decreases, the underexcitation becomes more sensitive.

Figure. 4.4.19 - 113. Underexcitation protection in "Fixed" mode.

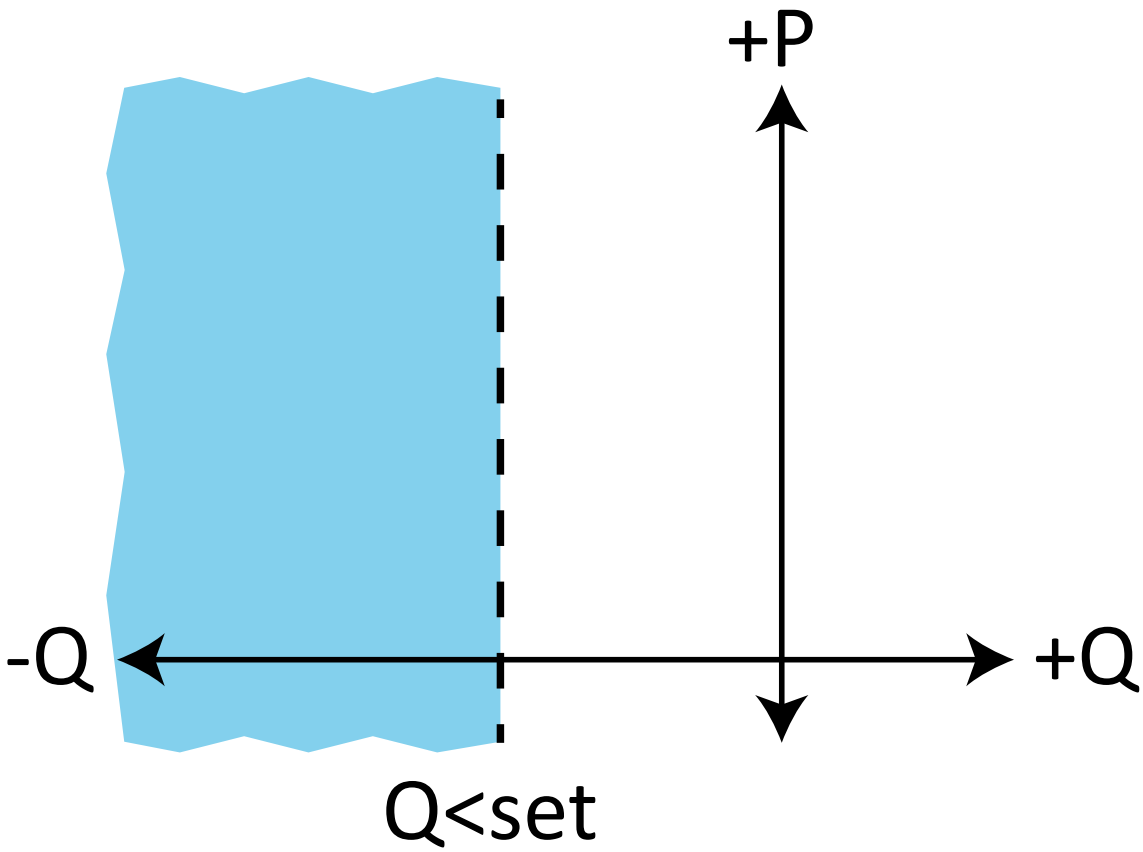

Table. 4.4.19 - 176. Pick-up settings in "P dependent" mode.

Name	Range	Step	Default	Description
Pick-up setting Qset<	-100 000…0.0 kvar	0.01 kvar	-100 kvar	Chooses the reactive power for the first point.
Pick-up setting P1 for Qset<	0.0…100 000 kW	0.01 kW	100 kW	The value of the active power for Q_{set}<.

© Arcteq Relays Ltd
IM00021

Name	Range	Step	Default	Description
Pick-up setting Qset2<	-100 000…0.0 kvar	0.01 kvar	-100 kvar	Chooses the reactive power for the second point.
Pick-up setting P2 for Qset2<	0.0…100 000 kW	0.01 kW	100 kW	The value of the active power for Q_{set2}<.
k multiplier	0.01…3.00	0.01	1.00	Underexcitation operating area shrinks or expands based on the generator's measured voltage level. At 100% of the nominal voltage (Un), the underexcitation limit operates as set. However, at a 90% nominal voltage level, the pick-up setting point (Q) is reduced by a multiplier of 0.9x. As the generator and network voltage level decreases, the underexcitation becomes more sensitive.

Figure. 4.4.19 - 114. Underexcitation protection in "P dependent" mode.

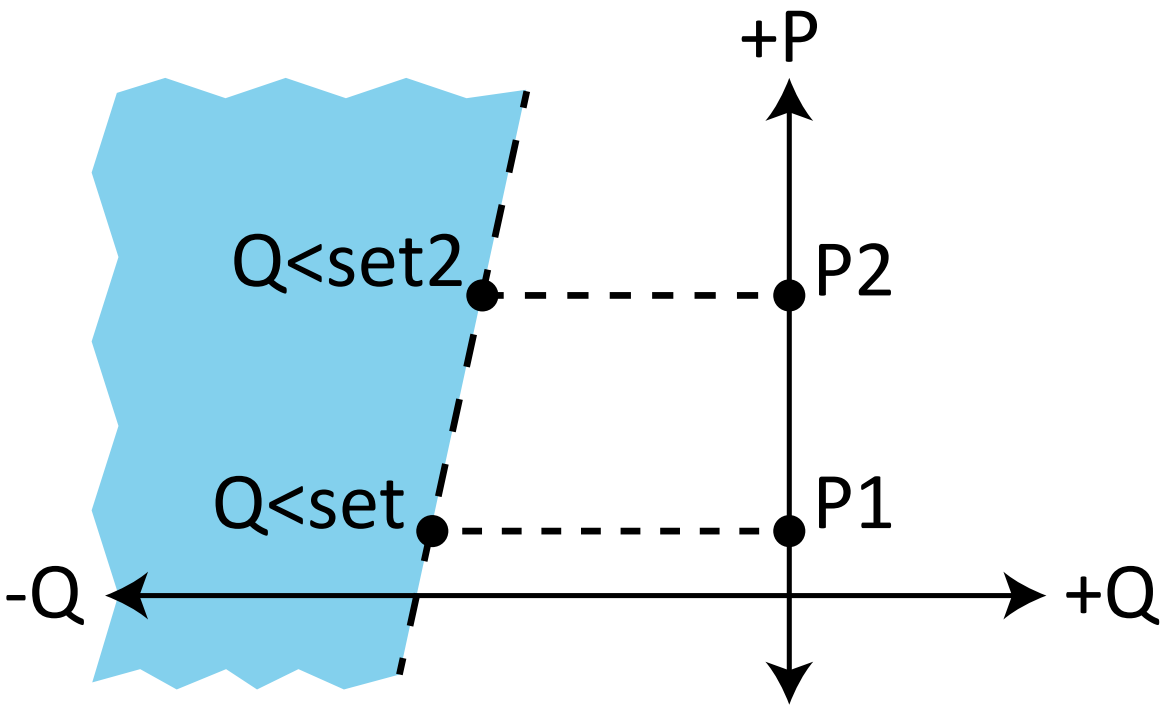

Table. 4.4.19 - 177. Pick-up settings in "Dynamic S dependent" mode.

Name	Range	Step	Default	Description
Min. Q% of S nominal [1]	-120…-10	0.1	-30.0	Reactive power value of the first point.
P%/Sn [1]	0.0…100.0	0.1	100	Active power value of the first point.

Name	Range	Step	Default	Description
Min. Q% of S nominal [2]	-120…-10	0.1	-25.0	Reactive power value of the second point.
P%/Sn [2]	0.0…100.0	0.1	75.0	Active power value of the second point.
Min. Q% of S nominal [3]	-120…-10	0.1	-20.0	Reactive power value of the third point.
P%/Sn [3]	0.0…100.0	0.1	50.0	Active power value of the third point.
Min. Q% of S nominal [4]	-120…-10	0.1	-15.0	Reactive power value of the fourth point.
P%/Sn [4]	0.0…100.0	0.1	25.0	Active power value of the fourth point.
Min. Q% of S nominal [5]	-120…-10	0.1	-10.0	Reactive power value of the fifth point.
P%/Sn [5]	-	-	0.0	Active power value of the fifth point. Fixed to zero.
Enable voltage multiplier	• Enabled • Disabled	-	Enabled	Enables or disables the k multiplier parameter.
k multiplier	0.01…3.00	0.01	1.00	If this setting is activated, the underexcitation operating area shrinks or expands based on the generator's measured voltage level. At 100% of the nominal voltage (Un), the underexcitation limit operates as set. However, at a 90% nominal voltage level, each setting point (1-5) reactive setting (Q) is reduced by a multiplier of 0.9x. As the generator and network voltage level decreases, the underexcitation becomes more sensitive.

Dynamic S dependent operating mode allows the user to create an underexcitation protection area, which is adjusted using five setting points. Each setting point has two parameters: reactive power (Q) and active power (P), which are set as a percentage of the apparent power (S) (set at *Protection → Generator Module → INFO → Generator Characteristics and Measurement Setup*). If turbine limitations allow the generator to operate at 80% active power of the rated armature power (S), the first setting point should start from 80%. The last, fifth setting point automatically ends at 0% kVA.

© Arcteq Relays Ltd
IM00021

Figure. 4.4.19 - 115. Underexcitation protection in "Dynamic S dependent" mode.

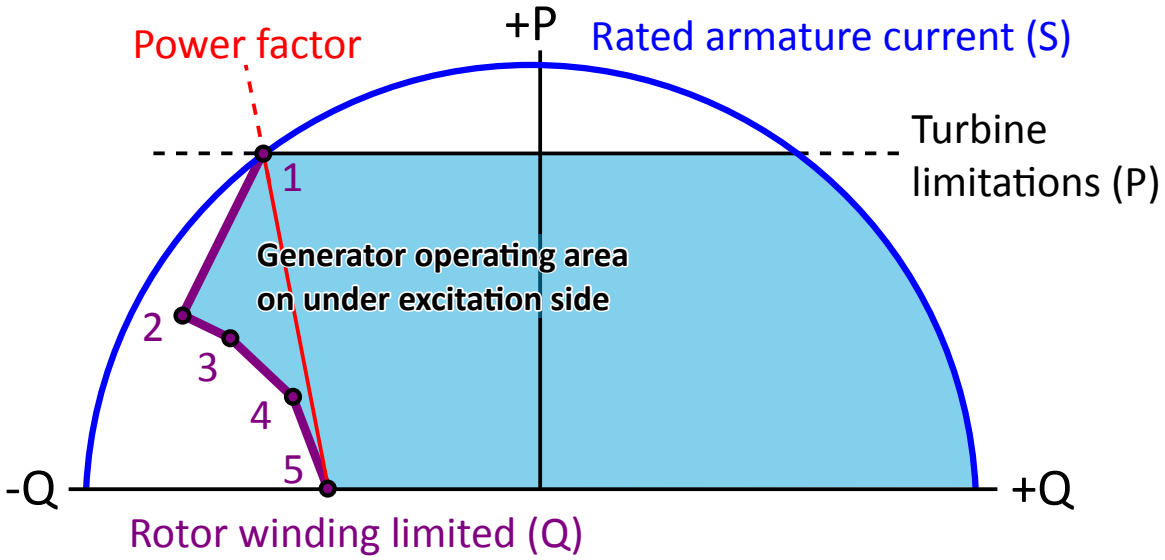

Read-only parameters

The function's *Info* page displays useful, real-time information on the state of the protection function. It is accessed either through the device's HMI display, or through the setting tool software when it is connected to the device and its Live Edit mode is active.

Table. 4.4.19 - 178. Information displayed by the function.

Name	Range	Step	Description
Q< LN behaviour	• On • Blocked • Test • Test/Blocked • Off	-	Displays the mode of UEX block. This parameter is visible only when *Allow setting of individual LN mode* is enabled in *General* menu.
Q< condition	• Normal • Start • Trip • Blocked	-	Displays the status of the protection function.
Q< selected measurement	• POW1CT1 • POW1CT2 • POW2CT1 • POW2CT2 • Undefined	-	Displays the selected power measurement. This indication is visible if the device has more than one current measurement unit.
Nominal apparent power	0.10…1 000 000.00 kVA	0.01 kVA	Displays the nominal apparent power set at *Protection → Generator Module → INFO → Generator Characteristics and Measurement Setup*
Q pickup level now (%/Sn)	-1 000 000…1 000 000 %/Sn	0.01 %/Sn	Displays the ratio between the underexcitation pick-up level (Q) currently and the nominal apparent power.
Pickup level now	1 000 000 kvar…1 000 000 kvar	0.01 kvar	Displays the underexcitation pick-up level (Q) in kvar value.

Name	Range	Step	Description
Expected operating time	0.000...1800.000 s	0.005 s	Displays the expected operating time when a fault occurs.
Time remaining to trip	-1800.000...1800.000 s	0.005 s	When the function has detected a fault and counts down time towards a trip, this displays how much time is left before tripping occurs.
Q_{meas}/Q_{set} at the moment	-1250.00...1250.00 Q_m/Q_{set}	0.01 Q_m/Q_{set}	The ratio between the measured reactive power and the pick-up value.

Function blocking

The blocking signal is evaluated at the start of each program cycle. The blocking signals are connected to the function's dedicated input, which can be configured in the *IO → Blocking Input Control* tab of the function.

- When the pick-up element activates and the blocking signal is not active, a START signal is generated and the function starts or continues the trip-time countdown.
- When the pick-up element activates and the blocking input signal is active, a BLOCKED signal is generated, and the function does not process the event further.
- When START signal is already active and the blocking input signal becomes active, the START signal is reset and BLOCKED signal is generated. The release-time characteristics are processed as if the fault condition had been cleared.

The blocking signal needs to reach the device minimum of 5 ms before the set operating delay has passed in order for the blocking to activate in time.

Operating time characteristics for trip and reset

This function supports definite time delay (DT). For detailed information on these delay types please refer to the chapter "General properties of a protection function" and its section "Operating time characteristics".

Events and registers

The underexcitation function (abbreviated "UEX" in event block names) generates events and registers from the status changes in the events listed below. The user can select which event messages are stored in the main event buffer: ON, OFF, or both. The events triggered by the function are recorded with a time stamp.

The function's output can be used for direct I/O controlling and user logic programming. The function also provides a resettable cumulative counter for the START, TRIP and BLOCKED events.

Table. 4.4.19 - 179. Event messages.

Event block name	Event names
UEX1	Start ON/OFF
UEX1	Trip ON/OFF
UEX1	Block ON/OFF

© Arcteq Relays Ltd
IM00021

The function registers its operation into the last twelve (12) time-stamped registers. The register of the function records the ON event process data for START, TRIP or BLOCKED. The table below presents the structure of the function's register content.

Table. 4.4.19 - 180. Register content.

Register	Description
Event	Event name
Date and time	dd.mm.yyyy hh:mm:ss.mss
Pre-trigger power (P&Q)	Start/Trip -20ms power
Fault power (P&Q)	Start/Trip power
Pre-fault power (P&Q)	Start -200ms power
Trip time remaining	0 ms...1800s
Setting group in use	Setting group 1...8 active

4.4.20 Underimpedance protection (Z<; 21U)

Underimpedance protection is an alternative for voltage-restrained overcurrent protection. It can be used to detect short-circuit faults near the generator even when the short-circuit current is small. Additionally, under impedance protection can be used as backup protection for transformer protection.

Figure. 4.4.20 - 116. Operating characteristics of underimpedance protection.

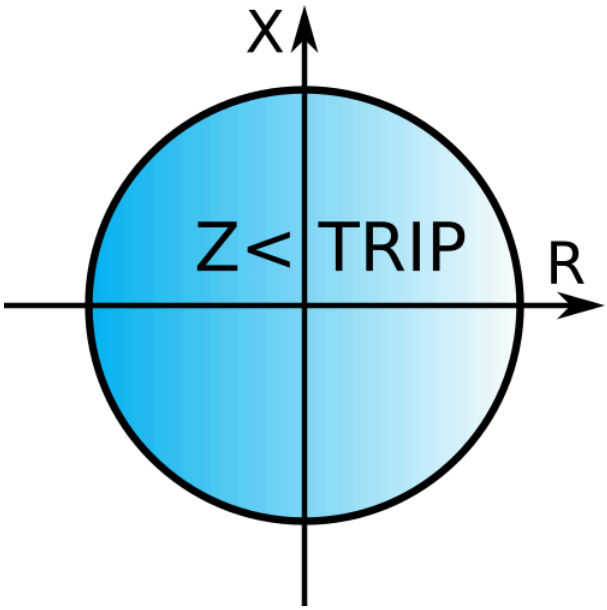

Figure. 4.4.20 - 117. Simplified function block diagram of the Z< function.

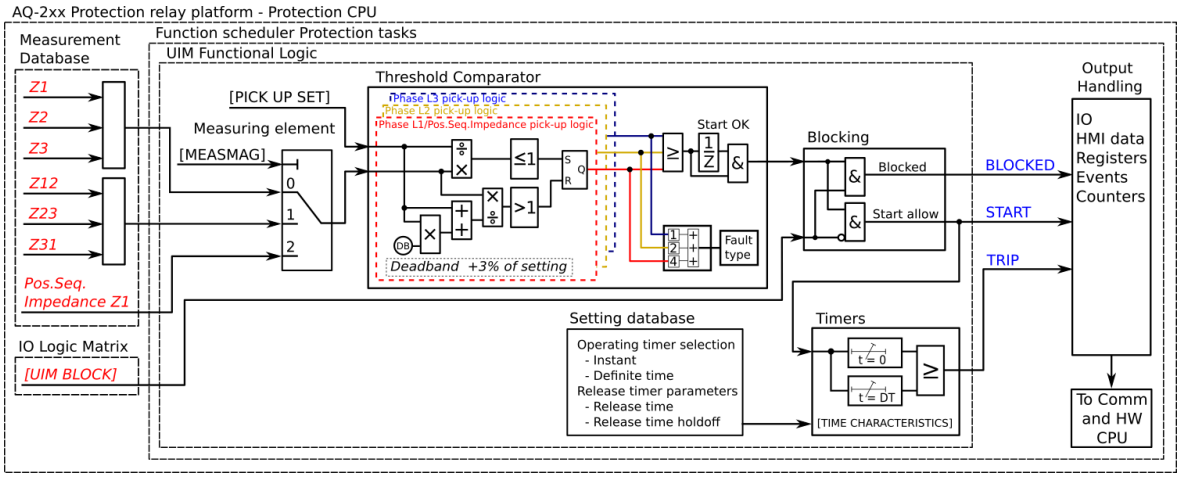

Measured input

The function block uses phase currents and phase-to-phase or phase-to-neutral voltage measurement values. These values are used for calculating impedance.

Table. 4.4.20 - 181. Measurement inputs of the Z< function.

Signal	Description
I_{L1}RMS	Fundamental frequency component of phase L1 (A) current
I_{L2}RMS	Fundamental frequency component of phase L2 (B) current
I_{L3}RMS	Fundamental frequency component of phase L3 (C) current
U_1RMS	Fundamental frequency component of voltage channel U_1/V
U_2RMS	Fundamental frequency component of voltage channel U_2/V
U_3RMS	Fundamental frequency component of voltage channel U_3/V
U_4RMS	Fundamental frequency component of voltage channel U_4/V

General settings

The following general settings define the general behavior of the function. These settings are static i.e. it is not possible to change them by editing the setting group.

Table. 4.4.20 - 182. General settings of the function.

Name	Range	Default	Description
Z< LN mode	• On • Blocked • Test • Test/ Blocked • Off	On	Set mode of UIM block. This parameter is visible only when *Allow setting of individual LN mode* is enabled in *General* menu.

© Arcteq Relays Ltd
IM00021

Name	Range	Default	Description
Z< force status to	• Normal • Start • Trip • Blocked	Normal	Force the status of the function. Visible only when *Enable stage forcing* parameter is enabled in *General* menu.
Operation mode	• P-E Impedances • P-P Impedances • Pos. seq. Impedance	P-E Impedance	Selects the used impedances.

Pick-up settings

The Z_{set} *(pri)*< setting parameter controls the the pick-up of the Z< function. This defines the minimum allowed measured impedance before action from the function. The function constantly calculates the ratio between the impedance pick-up leveland the calculated impedance for each of the three stages or the positive sequence impedance. The reset ratio of 103 % is built into the function and is always relative to the current pick-up value.

Setting group selection controls the operating characteristics of the function, i.e. the user or user-defined logic can change function parameters while the function is running.

Table. 4.4.20 - 183. Pick-up settings.

Name	Range	Step	Default	Description
Z_{set} (pri)<	0.10…150.00Ω	0.01Ω	10Ω	Pick-up setting as primary side impedance

Read-only parameters

The function's *Info* page displays useful, real-time information on the state of the protection function. It is accessed either through the device's HMI display, or through the setting tool software when it is connected to the device and its Live Edit mode is active.

Table. 4.4.20 - 184. Information displayed by the function.

Name	Range	Step	Description
Z< LN behaviour	• On • Blocked • Test • Test/Blocked • Off	-	Displays the mode of UIM block. This parameter is visible only when *Allow setting of individual LN mode* is enabled in *General* menu.
Z< condition	• Normal • Start • Trip • Blocked	-	Displays status of the protection function.
Expected operating time	0.000...1800.000s	0.005s	Displays the expected operating time when a fault occurs.

Name	Range	Step	Description
Time remaining to trip	-1800.000...1800.000s	0.005s	When the function has detected a fault and counts down time towards a trip, this displays how much time is left before tripping occurs.
Z_{meas}/Z_{set} at the moment	0.00...1250.00	0.01	The ratio between the lowest measured impedance and the pick-up value.

Function blocking

The blocking signal is evaluated at the start of each program cycle. The blocking signals are connected to the function's dedicated input, which can be configured in the *IO → Blocking Input Control* tab of the function.

- When the pick-up element activates and the blocking signal is not active, a START signal is generated and the function starts or continues the trip-time countdown.
- When the pick-up element activates and the blocking input signal is active, a BLOCKED signal is generated, and the function does not process the event further.
- When START signal is already active and the blocking input signal becomes active, the START signal is reset and BLOCKED signal is generated. The release-time characteristics are processed as if the fault condition had been cleared.

The blocking signal needs to reach the device minimum of 5 ms before the set operating delay has passed in order for the blocking to activate in time.

Operating time characteristics for trip and reset

This function supports definite time delay (DT). For detailed information on these delay types please refer to the chapter "General properties of a protection function" and its section "Operating time characteristics".

Events and registers

The underimpedance protection function (abbreviated "UIM" in event block names) generates events and registers from the status changes in the events listed below. The user can select which event messages are stored in the main event buffer: ON, OFF, or both. The events triggered by the function are recorded with a time stamp.

The function's outputs can be used for direct I/O controlling and user logic programming. The function also provides a resettable cumulative counter for the START, TRIP and BLOCKED events.

The function offers two (2) independent stages; the events are segregated for each stage operation.

Table. 4.4.20 - 185. Event messages.

Event block name	Event names
UIM1...UIM2	Start ON/OFF
UIM1...UIM2	Trip ON/OFF
UIM1...UIM2	Block ON/OFF

The function registers its operation into the last twelve (12) time-stamped registers. The register of the function records the ON event process data for START, TRIP or BLOCKED. The table below presents the structure of the function's register content.

© Arcteq Relays Ltd
IM00021

Table. 4.4.20 - 186. Register content.

Register	Description
Date and time	dd.mm.yyyy hh:mm:ss.mss
Event	Event name
Fault type	A-E...A-B-C
Pre-trigger impedance	Start/Trip -20ms impedance
Fault impedance	Start/Trip impedance
Pre-fault impedance	Start -200ms impedance
Trip time remaining	0 ms...1800s
Setting group in use	Setting group 1...8 active

4.4.21 Underexcitation protection (X<; 40)

Synchronous machines require a certain amount of excitation to stay stable. If the excitation drops too low a synchronous machine can drop out of step. One way for the protection relay to sense underexcitation is by measuring the impedance. When the measured impedance enters the defined circle, the function will trip.

Figure. 4.4.21 - 118. Underexcitation protection with impedance measurement.

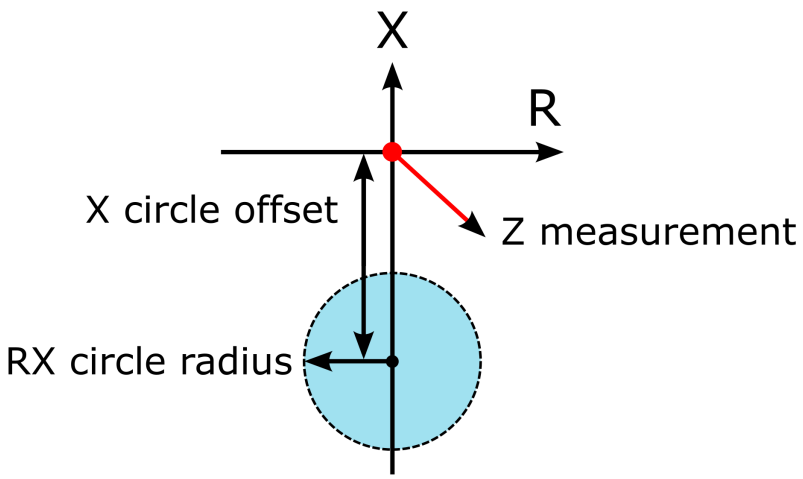

Measured input

The function block uses phase currents and line-to-line or line-to-neutral voltages to calculate phase-to-phase impedance values, phase-to-neutral impedance values or positive sequence impedance values.

Table. 4.4.21 - 187. Measurement inputs of the X< function.

Signal	Description
Z1 Impedance loop	Phase-to-neutral impedance loop

Signal	Description
Z2 Impedance loop	Phase-to-neutral impedance loop
Z3 Impedance loop	Phase-to-neutral impedance loop
Z12 Impedance loop	Phase-to-phase impedance loop
Z23 Impedance loop	Phase-to-phase impedance loop
Z31 Impedance loop	Phase-to-phase impedance loop
Positive sequence impedance	Pos.seq. impedance calculated from three phases

General settings

The following general settings define the general behavior of the function. These settings are static i.e. it is not possible to change them by editing the setting group.

Table. 4.4.21 - 188. General settings of the function.

Name	Range	Default	Description
X< LN mode	• On • Blocked • Test • Test/ Blocked • Off	On	Set mode of URX block. This parameter is visible only when *Allow setting of individual LN mode* is enabled in *General* menu.
X< force status to	• Normal • Start • Trip • Blocked	Normal	Force the status of the function. Visible only when *Enable stage forcing* parameter is enabled in *General* menu.
Operation mode	• P-E impedances • Pos. Seq. impedances • P-P impedances	P-E impedances	Defines which available measurement is used by the function.

Pick-up settings

The *X circle offset* and *RX circle radius* setting parameters control the pick-up of the X< function. This defines the tripping area of the function. The function constantly monitors the distance between the defined circle and the measured impedance. The reset ratio of 103 % is built into the function and is always relative to the RX circle radius.

Setting group selection controls the operating characteristics of the function, i.e. the user or user-defined logic can change function parameters while the function is running.

© Arcteq Relays Ltd
IM00021

Table. 4.4.21 - 189. Pick-up settings.

Name	Range	Step	Default	Description
X circle offset (pri)	-50 000...50 000 Ohm	0.01 Ohm	-50.00 Ohm	Sets the distance from origo to the edge of tripping area.
RX circle radius (pri)	0.01...50 000 Ohm	0.01 Ohm	50.00 Ohm	Sets the radius of tripping area.

Read-only parameters

The function's *Info* page displays useful, real-time information on the state of the protection function. It is accessed either through the device's HMI display, or through the setting tool software when it is connected to the device and its Live Edit mode is active.

Table. 4.4.21 - 190. Information displayed by the function.

Name	Range	Step	Description
X< LN behaviour	• On • Blocked • Test • Test/Blocked • Off	-	Displays the mode of URX block. This parameter is visible only when *Allow setting of individual LN mode* is enabled in *General* menu.
X< condition	• Normal • Start • Trip • Blocked	-	Displays the status of the protection function.
Expected operating time	0.000...1800.000s	0.005s	Displays the expected operating time when a fault occurs.
Time remaining to trip	-1800.000...1800.000s	0.005s	When the function has detected a fault and counts down time towards a trip, this displays how much time is left before tripping occurs.
Z_{meas}/Z_{set} at the moment	-1250.00...1250.00 Z_m/Z_{set}	0.01Z_m/Z_{set}	The ratio between the measured impedance and the pick-up value.

Function blocking

The blocking signal is evaluated at the start of each program cycle. The blocking signals are connected to the function's dedicated input, which can be configured in the *IO → Blocking Input Control* tab of the function.

- When the pick-up element activates and the blocking signal is not active, a START signal is generated and the function starts or continues the trip-time countdown.
- When the pick-up element activates and the blocking input signal is active, a BLOCKED signal is generated, and the function does not process the event further.
- When START signal is already active and the blocking input signal becomes active, the START signal is reset and BLOCKED signal is generated. The release-time characteristics are processed as if the fault condition had been cleared.

The blocking signal needs to reach the device minimum of 5 ms before the set operating delay has passed in order for the blocking to activate in time.

Operating time characteristics for trip and reset

This function supports definite time delay (DT). For detailed information on this delay type please refer to the chapter "General properties of a protection function" and its section "Operating time characteristics".

Events and registers

The underexcitation function (abbreviated "URX" in event block names) generates events and registers from the status changes in the events listed below. The user can select which event messages are stored in the main event buffer: ON, OFF, or both. The events triggered by the function are recorded with a time stamp.

The function's outputs can be used for direct I/O controlling and user logic programming. The function also provides a resettable cumulative counter for the START, TRIP and BLOCKED events.

Table. 4.4.21 - 191. Event messages.

Event block name	Event names
URX1...URX2	Start ON/OFF
URX1...URX2	Trip ON/OFF
URX1...URX2	Block ON/OFF

The function registers its operation into the last twelve (12) time-stamped registers. The register of the function records the ON event process data for START, TRIP or BLOCKED. The table below presents the structure of the function's register content.

Table. 4.4.21 - 192. Register content.

Register	Description
Date and time	dd.mm.yyyy hh:mm:ss.mss
Event	Event name
Pre-trigger impedance (Z)	Start/Trip -20ms impedance
Fault impedance (Z)	Start/Trip impedance
Pre-fault impedance (Z)	Start -200ms impedance
Trip time remaining	0 ms...1800s
Setting group in use	Setting group 1...8 active

© Arcteq Relays Ltd
IM00021

4.4.22 Voltage-restrained overcurrent protection (Iv>; 51V)

Short-circuits that occur close to the generator decrease the fault current which in turn inhibits the operation of a high-set overcurrent stage. The decreasing voltage caused by these faults can be used to decrease the current pick-up level and thus to improve sensitivity. This voltage-restrained overcurrent protection function can be used as an alternative for the underimpedance function for more sensitive short-circuit detection in generator protection applications.

When there is a short-circuit near the generator, the voltage decreases which in this function's case decreases the overcurrent's pick-up level according to set parameters. The function can work as voltage-controlled overcurrent protection or as voltage-restrained overcurrent protection. When the set parameter value Ux2 is greater than Ux1, the protection function works as voltage-restrained overcurrent protection. In this case the overcurrent pick-up value increases as the voltage increases between the set values Ux1 and Ux2. The protection function uses positive sequence voltage to define the pick-up level at that moment.

When the set value of Ux1 is equal to Ux2, the function works as voltage-controlled overcurrent protection. Now the overcurrent protection doesn't operate until a fault reduces the voltage below a set value, usually about 80 % of the normal. A fixed pick-up level of voltage-controlled overcurrent protection is easier to coordinate with other protection devices. However, the voltage-restrained overcurrent protection function is less prone to making unwanted operations on motor starting currents and system swings.

Figure. 4.4.22 - 119. Pick-up levels in the two modes.

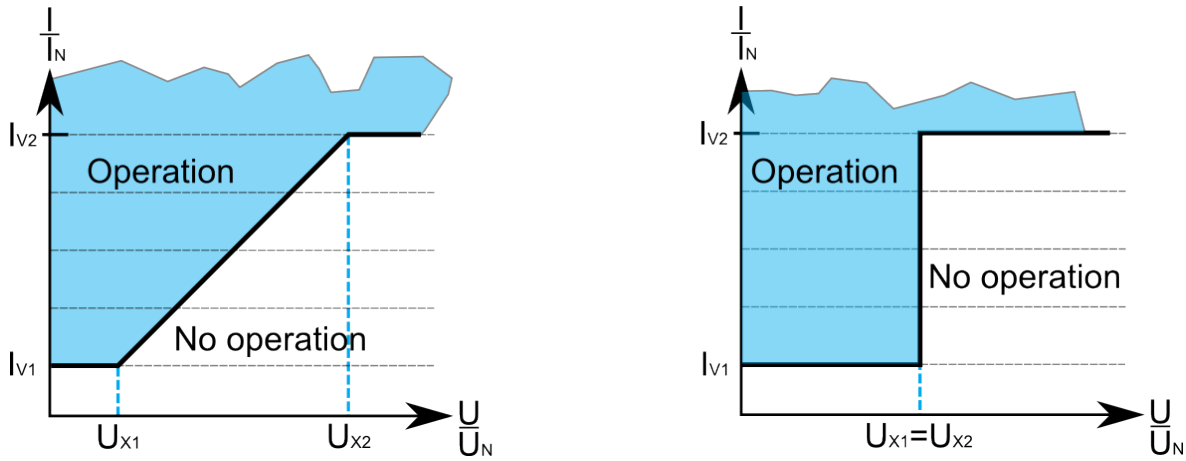

Figure. 4.4.22 - 120. Simplified function block diagram of the Iv> function.

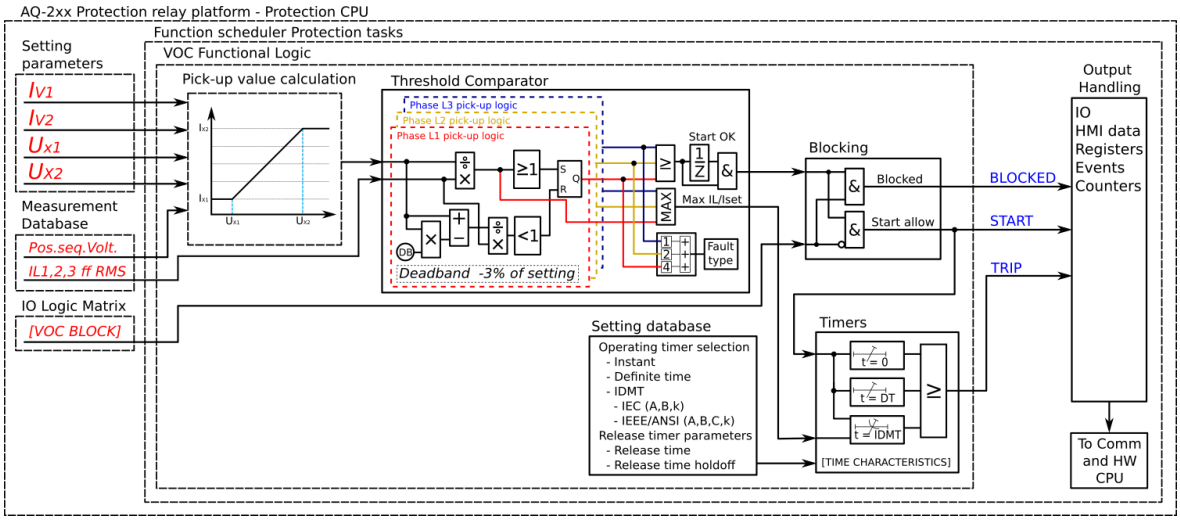

Measured input

The function block uses fundamental frequency component of phase current measurement values. The function block uses fundamental frequency component of phase-to-phase, phase-to-neutral and zero sequence voltage.

Table. 4.4.22 - 193. Measurement inputs of the voltage-restrained overcurrent protection function.

Signal	Description
I_{L1}RMS	Fundamental frequency component of phase L1 (A) current
I_{L2}RMS	Fundamental frequency component of phase L2 (B) current
I_{L3}RMS	Fundamental frequency component of phase L3 (C) current
U_1RMS	Fundamental frequency component of voltage channel U_1/V
U_2RMS	Fundamental frequency component of voltage channel U_2/V
U_3RMS	Fundamental frequency component of voltage channel U_3/V
U_4RMS	Fundamental frequency component of voltage channel U_4/V

General settings

The following general settings define the general behavior of the function. These settings are static i.e. it is not possible to change them by editing the setting group.

© Arcteq Relays Ltd
IM00021

Table. 4.4.22 - 194. General settings of the function.

Name	Range	Default	Description
Iv> LN mode	• On • Blocked • Test • Test/ Blocked • Off	On	Set mode of VOC block. This parameter is visible only when *Allow setting of individual LN mode* is enabled in *General* menu.
Iv> force status to	• Normal • Start • Trip • Blocked	Normal	Force the status of the function. Visible only when *Enable stage forcing* parameter is enabled in *General* menu.

Pick-up settings

The *Iv1*, *Iv2*, *Ux1*, *Ux2* setting parameters and *the positive sequence voltage measurement* control the pick-up level of the voltage-restrained overcurrent protection function. The pick-up level defines the maximum allowed measured current before action from the function. The function constantly calculates the ratio between the current pick-up level and the measured magnitude (I_m) for each of the three phases. The reset ratio of 97 % is built into the function and is always relative to the current pick-up value.

Setting group selection controls the operating characteristics of the function, i.e. the user or user-defined logic can change function parameters while the function is running.

Table. 4.4.22 - 195. Pick-up settings.

Name	Range	Step	Default	Description
1st knee point (Iv>)	0.10…40.00xI_n	0.01xI_n	0.2 xI_n	The lower current limit.
2nd knee point (Iv2>)	0.10…40.00xI_n	0.01xI_n	1.2xI_n	The higher current limit.
1st knee point voltage (Ux1)	0.00…150.00%U_n	0.01%U_n	20%U_n	The lower voltage limit.
2nd knee point voltage (Ux2)	0.00…150.00%U_n	0.01%U_n	100%U_n	The higher voltage limit. When this value is higher than Ux1, the function operates as voltage-restrained overcurrent protection. If the two values are equal, the function operates as voltage-controlled overcurrent protection.

Read-only parameters

The function's *Info* page displays useful, real-time information on the state of the protection function. It is accessed either through the device's HMI display, or through the setting tool software when it is connected to the device and its Live Edit mode is active.

Table. 4.4.22 - 196. Information displayed by the function.

Name	Range	Step	Description
Iv> LN behaviour	• On • Blocked • Test • Test/Blocked • Off	-	Displays the mode of VOC block. This parameter is visible only when *Allow setting of individual LN mode* is enabled in *General* menu.
Iv> condition	• Normal • Start • Trip • Blocked	-	Displays status of the protection function.
Expected operating time	0.000...1800.000s	0.005s	Displays the expected operating time when a fault occurs. When IDMT mode is used, the expected operating time depends on the measured highest phase current value. If the measured current changes during a fault, the expected operating time changes accordingly.
Time remaining to trip	-1800.000...1800.000s	0.005s	When the function has detected a fault and counts down time towards a trip, this displays how much time is left before tripping occurs.
Voltage measurement	• Invalid U1 not avail. • Ok	-	If phase voltages are not available the function is not able to calculate positive sequence voltage (U1). This can happen when voltage measurement mode has been set to "3LL+U4" or "2LL+U3+U4" mode but none of the channels have been set to "U0" mode.
I> pick-up level now	0.00...1250.00xIn	0.01xIn	Overcurrent pick-up level used by the function at the moment. The pick-up level changes with positive sequence voltage setting changes.
Measured voltage now	0.00...1250.00%Un	0.01%Un	Calculated positive sequence voltage at the moment. This influences the overcurrent pick-up level used by the function.
I_{meas}/I_{set} at the moment	0.00...1250.00	0.01	The ratio between the highest measured phase current and the pick-up value.

Function blocking

The blocking signal is evaluated at the start of each program cycle. The blocking signals are connected to the function's dedicated input, which can be configured in the *IO → Blocking Input Control* tab of the function.

- When the pick-up element activates and the blocking signal is not active, a START signal is generated and the function starts or continues the trip-time countdown.
- When the pick-up element activates and the blocking input signal is active, a BLOCKED signal is generated, and the function does not process the event further.
- When START signal is already active and the blocking input signal becomes active, the START signal is reset and BLOCKED signal is generated. The release-time characteristics are processed as if the fault condition had been cleared.

The blocking signal needs to reach the device minimum of 5 ms before the set operating delay has passed in order for the blocking to activate in time.

© Arcteq Relays Ltd
IM00021

Operating time characteristics for trip and reset

This function supports definite time delay (DT) and inverse definite minimum time delay (IDMT). If IDMT is selected for this function, the time delay depends on the ratio between the measured current and the current pick-up level at that moment. This means that the operation time can also shorten as a result of the reduced voltage. For detailed information on these delay types please refer to the chapter "General properties of a protection function" and its section "Operating time characteristics".

Events and registers

The voltage-restrained overcurrent protection function (abbreviated "VOC" in event block names) generates events and registers from the status changes in the events listed below. The user can select which event messages are stored in the main event buffer: ON, OFF, or both. The events triggered by the function are recorded with a time stamp.

The function's outputs can be used for direct I/O controlling and user logic programming. The function also provides a resettable cumulative counter for the START, TRIP and BLOCKED events.

Table. 4.4.22 - 197. Event messages.

Event block name	Event names
VOC1	Start ON/OFF
VOC1	Trip ON/OFF
VOC1	Block ON/OFF

The function registers its operation into the last twelve (12) time-stamped registers. The register of the function records the ON event process data for START, TRIP or BLOCKED. The table below presents the structure of the function's register content.

Table. 4.4.22 - 198. Register content.

Register	Description
Date and time	dd.mm.yyyy hh:mm:ss.mss
Event	Event name
Fault type	L1-E…L1-L2-L3
Pre-trigger current	Start/Trip -20ms current
Fault current	Start/Trip current
U1 Voltage	Positive sequence voltage
Current pick-up	Pick-up current level
Pre-fault current	Start -200ms current
Trip time remaining	0 ms...1800s
Setting group in use	Setting group 1...8 active

4.4.23 Inadvertent energizing protection (I> U< I.A.E; 50/27)

Inadvertent energizing protection function is intended to be used for protection the generator from connecting the generator to network when it is not rotating. A machine that is accidentally energized from the power system can be damaged or completely destroyed.

Measured input

The function block uses fundamental frequency component of phase current measurement values. The function block uses fundamental frequency component of phase-to-phase, phase-to-neutral and zero sequence voltage.

Table. 4.4.23 - 199. Measurement inputs of the I> U< I.A.E function.

Signal	Description
I_{L1}RMS	Fundamental frequency component of phase L1 (A) current
I_{L2}RMS	Fundamental frequency component of phase L2 (B) current
I_{L3}RMS	Fundamental frequency component of phase L3 (C) current
U_1RMS	Fundamental frequency component of voltage channel U_1/V
U_2RMS	Fundamental frequency component of voltage channel U_2/V
U_3RMS	Fundamental frequency component of voltage channel U_3/V
U_4RMS	Fundamental frequency component of voltage channel U_4/V

General settings

The following general settings define the general behavior of the function. These settings are static i.e. it is not possible to change them by editing the setting group.

Table. 4.4.23 - 200. General settings of the function.

Name	Range	Default	Description
I>U< I.A.E LN mode	• On • Blocked • Test • Test/ Blocked • Off	On	Set mode of IAE block. This parameter is visible only when *Allow setting of individual LN mode* is enabled in *General* menu.
I>U< I.A.E. force status to	• Normal • Start • Trip • Blocked	Normal	Force the status of the function. Visible only when *Enable stage forcing* parameter is enabled in *General* menu.

© Arcteq Relays Ltd
IM00021

Pick-up settings

Figure. 4.4.23 - 121. Operating characteristics of inadvertent energizing protection.

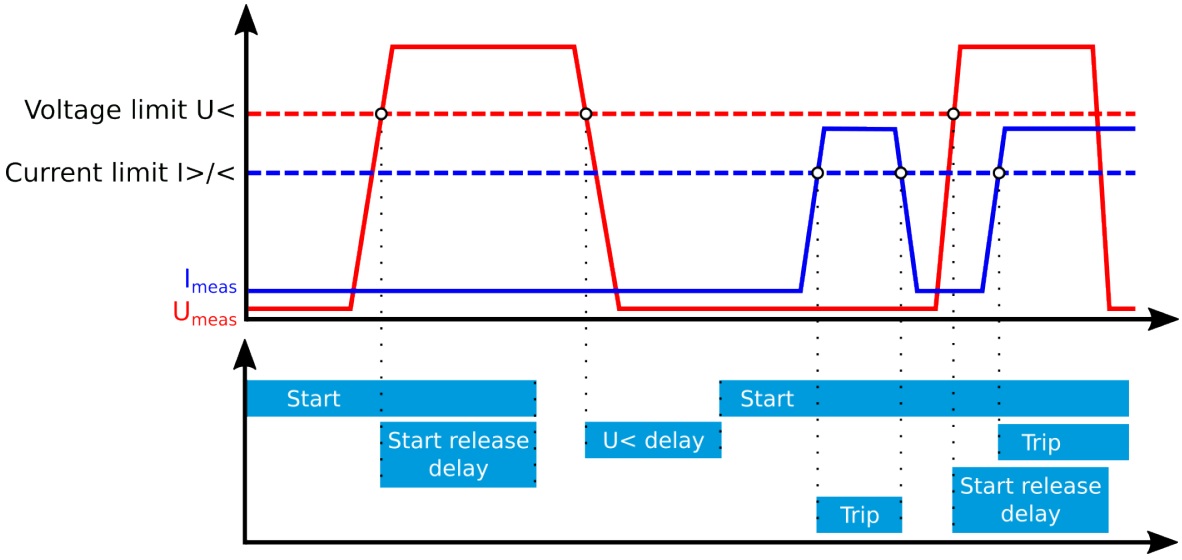

The *Voltage limit U<* and *Current limit I>/< activation* setting parameter controls the the pick-up of the function. Whenever the measured voltage is under the *Voltage limit U<* setting value the function is "Started". If voltage rises over the setting limit the function will wait for the duration set to *Time delay for releasing start condition* before releasing the start condition. When voltage decreases under *Voltage limit U<* the function will wait until duration set to *Time delay for U< activation* has passed. If the measured current rises over *Current limit I>/< activation* parameter while voltage is under the *Voltage limit U<* parameter the function will trip. Keep in mind that even if voltage is over the set limit the function can trip form rising current if start release time delay is still counting down.

Setting group selection controls the operating characteristics of the function, i.e. the user or user-defined logic can change function parameters while the function is running.

Table. 4.4.23 - 201. Pick-up settings.

Name	Range	Step	Default	Description
Voltage limit U<	0.00...99.00 %Un	0.01 %Un	50.00 %Un	Sets the under voltage limit for the function.
Time delay for U< activation	0.000...1800.000 s	0.005 s	5.000 s	When the voltage drops under the *Voltage limit U<* setting the function will wait for the duration of this parameter setting to activate "start" condition.
Current limit I>/<	0.05...3.00 xIn	0.05 xIn	0.05 xIn	If "start" condition is on and each phase current is above this limit the function will trip.
Time delay for releasing start condition	0.000...1800.000 s	0.005 s	0.250 s	When measured voltage rises over *Voltage limit U<* setting the function will wait for the duration of this parameter setting before disabling start condition. If each phase current rises over *Current limit I>/< setting* while start release is still going on the function will trip.

Read-only parameters

The function's *Info* page displays useful, real-time information on the state of the protection function. It is accessed either through the device's HMI display, or through the setting tool software when it is connected to the device and its Live Edit mode is active.

Table. 4.4.23 - 202. Information displayed by the function.

Name	Range	Step	Description
I>U< I.A.E LN behaviour	• On • Blocked • Test • Test/Blocked • Off	-	Displays the mode of IAE block. This parameter is visible only when *Allow setting of individual LN mode* is enabled in *General* menu.
I>U< I.A.E condition	• Normal • Start • Trip • Blocked	-	Displays status of the protection function.
Expected operating time	0.000...1800.000s	0.005s	Displays the expected operating time when a fault occurs.
Time remaining to trip	-1800.000...1800.000s	0.005s	When the function has detected a fault and counts down time towards a trip, this displays how much time is left before tripping occurs.
Measured voltage / set now	0.00...1250.00	0.01	The ratio between the positive sequence voltage and the pick-up setting.
Measured min current / set now	0.00...1250.00	0.01	The ratio between the lowest measured phase current and the pick-up setting.

Function blocking

The blocking signal is evaluated at the start of each program cycle. The blocking signals are connected to the function's dedicated input, which can be configured in the *IO → Blocking Input Control* tab of the function.

- When the pick-up element activates and the blocking signal is not active, a START signal is generated and the function starts or continues the trip-time countdown.
- When the pick-up element activates and the blocking input signal is active, a BLOCKED signal is generated, and the function does not process the event further.
- When START signal is already active and the blocking input signal becomes active, the START signal is reset and BLOCKED signal is generated. The release-time characteristics are processed as if the fault condition had been cleared.

The blocking signal needs to reach the device minimum of 5 ms before the set operating delay has passed in order for the blocking to activate in time.

© Arcteq Relays Ltd
IM00021

Events and registers

The inadvertent energizing protection function (abbreviated "IAE" in event block names) generates events and registers from the status changes in the events listed below. The user can select which event messages are stored in the main event buffer: ON, OFF, or both. The events triggered by the function are recorded with a time stamp.

The function's outputs can be used for direct I/O controlling and user logic programming. The function also provides a resettable cumulative counter for the START, TRIP and BLOCKED events.

Table. 4.4.23 - 203. Event messages.

Event block name	Event names
IAE1	Start ON/OFF
IAE1	Trip ON/OFF
IAE1	Block ON/OFF

The function registers its operation into the last twelve (12) time-stamped registers. The register of the function records the ON event process data for START, TRIP or BLOCKED. The table below presents the structure of the function's register content.

Table. 4.4.23 - 204. Register content.

Register	Description
Date and time	dd.mm.yyyy hh:mm:ss.mss
Event	Event name
Phase current	Phase 1,2,3 [A,B,C] currents
Phase voltage	Phase AB, BC and CA voltages
Setting group in use	Setting group 1...8 active

4.4.24 Volts-per-hertz overexcitation protection (V/Hz>; 24)

Generators, transformers, and motors have their own, specific volts-per-hertz ratios under which these machines are expected to operate. Exceeding the V/Hz ratio results in machine overexcitation which causes iron core saturation in generators and transformers. This causes a breakdown of the insulation in the core's interlamination due to excessive voltage and eddy current heating. Additionally, stray flux is induced into non-laminated components which are not designed to carry flux-caused currents. In generators overexcitation typically occurs if the V/Hz ratio goes five percent above the nominal V/Hz ratio, with any possible damage happening within seconds. The most common situation for overexcitation is when a machine is off-line prior to synchronization.

The figure below shows how the pick-up settings and the measured frequency affect the pick-up level of the volts-per-hertz protection function.

Figure. 4.4.24 - 122. Effect of pick-up settings and the measured frequency to the overvoltage function's pick-up level.

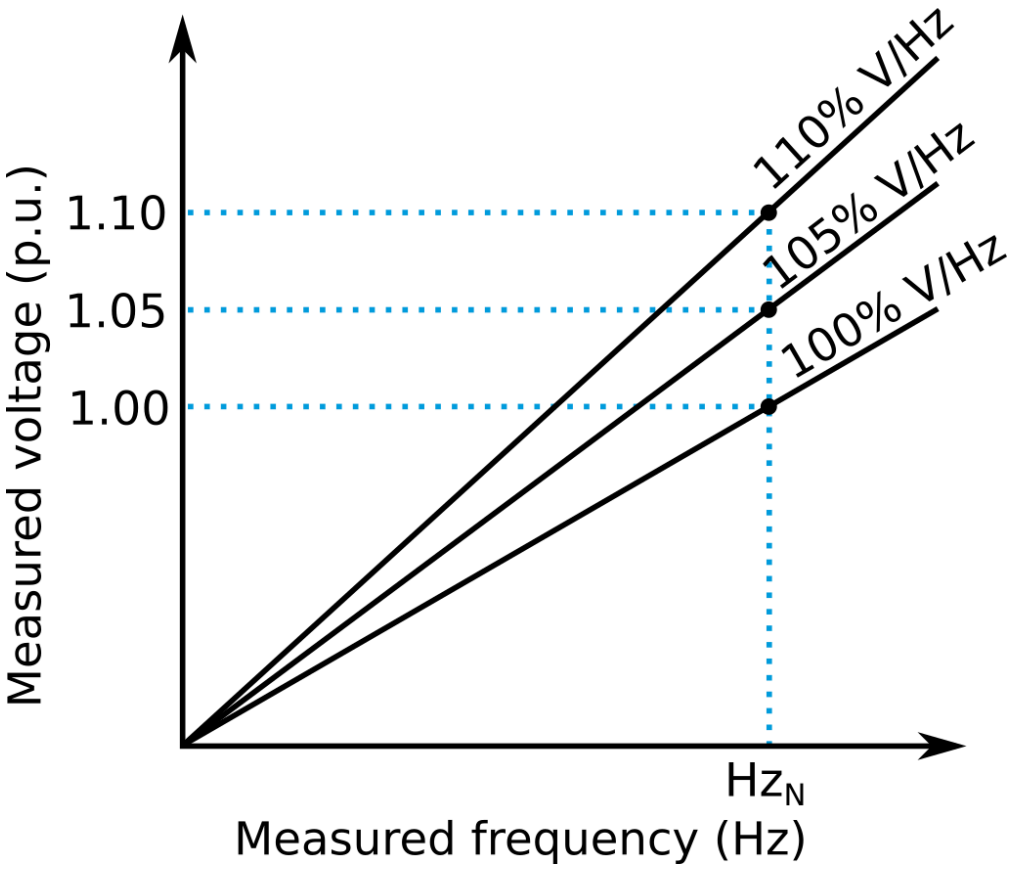

Figure. 4.4.24 - 123. Simplified function block diagram of the V/Hz> function.

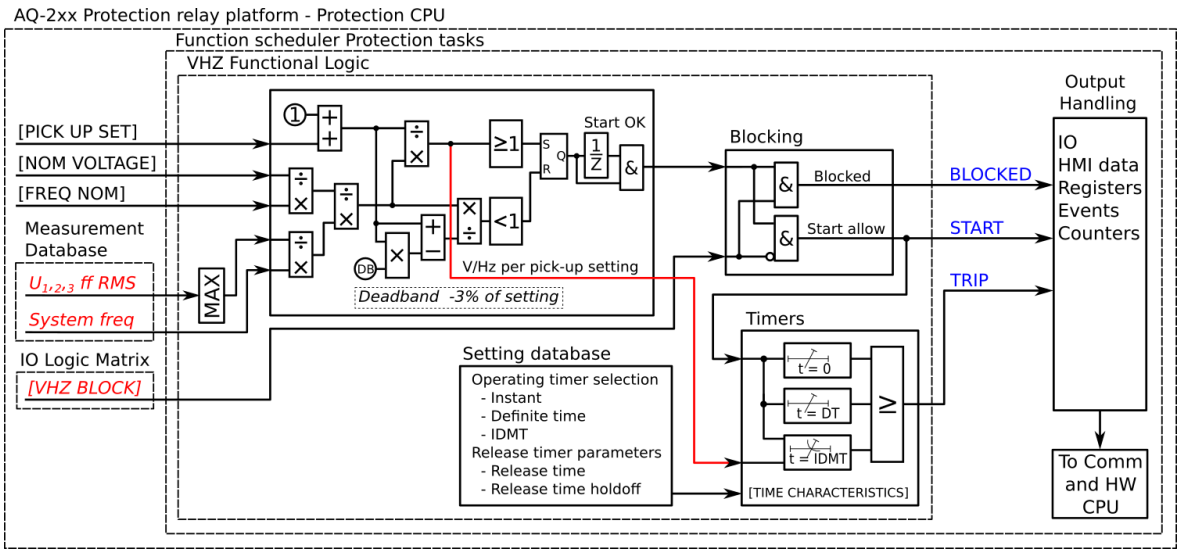

Measured input

The function block uses fundamental frequency component of phase-to-phase voltage measurements. Frequency measurement values is used for determining the overvoltage pick-up level. Please refer to "Frequency tracking and scaling" chapter for a detailed description of frequency tracking.

© Arcteq Relays Ltd
IM00021

NOTICE!
The used sampling mode for frequency must be "Tracking".

Table. 4.4.24 - 205. Measurement inputs of the volts-per-hertz function.

Signal	Description
U_1RMS	Fundamental frequency component of U_1/V voltage channel
U_2RMS	Fundamental frequency component of U_1/V voltage channel
U_3RMS	Fundamental frequency component of U_1/V voltage channel
U_4RMS	Fundamental frequency component of U_1/V voltage channel
Frequency reference 1	Primary frequency reference
Frequency reference 2	Secondary frequency reference
Frequency reference 3	Tertiary frequency reference

General settings

The following general settings define the general behavior of the function. These settings are static i.e. it is not possible to change them by editing the setting group.

Table. 4.4.24 - 206. General settings of the function.

Name	Range	Default	Description
V/Hz> LN mode	• On • Blocked • Test • Test/ Blocked • Off	On	Set mode of VHZ block. This parameter is visible only when *Allow setting of individual LN mode* is enabled in *General* menu.
V/Hz > force status to	• Normal • Start • Trip • Blocked	Normal	Force the status of the function. Visible only when *Enable stage forcing* parameter is enabled in *General* menu.

Pick-up settings

Volts-per-hertz protection is based on the ratio between the maximum phase-to-phase voltage and the measured system frequency. The *Pick-up V/Hz > (% of nominal)* setting parameter controls the pick-up of the volts-per-hertz function. This defines the maximum measured voltage allowed in relation to the measured frequency before action from the function. The function constantly calculates the ratio between the *Pick-up V/Hz (% of nominal)*and the calculated U_{meas}/f_{meas} ratio. The reset ratio of 97 % is built into the function and is always relative to the *Pick-up V/Hz (% of nominal)*value.

Setting group selection controls the operating characteristics of the function, i.e. the user or user-defined logic can change function parameters while the function is running.

Table. 4.4.24 - 207. Pick-up settings.

Name	Range	Step	Default	Description
Pick-up V/Hz > (% of nominal)	0.01…30.00%	0.01%	5.00%	The maximum allowed increase in the measured V/Hz ratio in relation to the nominal V/Hz ratio.
Alarm delay (DT)	0.000...1800.000s	0.005s	0.040s	The definite operation time delay for alarm event.
Delay type	• DT • Inverse • DT and inverse	-	DT	Selects the delay type(s) for the time counter.
Time dial setting k	0.01...65.00	0.01	0.01	Defines the time dial/multiplier setting for inverse curve characteristics. This setting is active and visible when the "Delay type" parameter is set to "Inverse" or "DT and inverse".
Definite operating time delay	0.000…1800.000s	0.005s	0.040s	The definite operating time delay which is applied no matter how much the V/Hz ratio is exceeded. This setting is only visible, when the selected delay type is "DT" or "DT and inverse".

Inverse operating time characteristics are calculated according to the following equation:

$$t_{inverse} = DT_{set} + \frac{0.18 \times TimeDial\ k}{\left(\frac{V}{Hz_{measured}} - 1\right)^{IDMT_{multiplier}}}$$

© Arcteq Relays Ltd
IM00021

Figure. 4.4.24 - 124. Inverse (above) and inverse and DT (below) time characteristics with the TimeDial k setting effect.

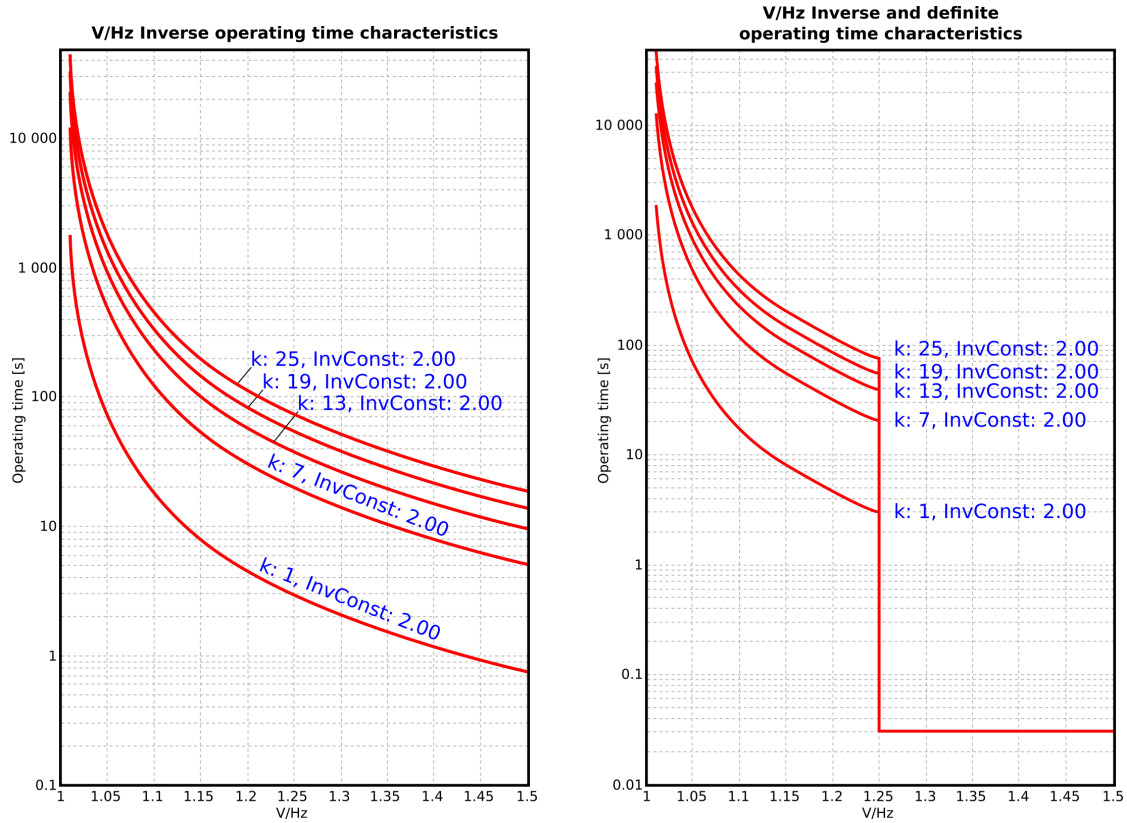

Figure. 4.4.24 - 125. Inverse (above) and inverse and DT (below) time characteristics with the inverse constant setting effect.

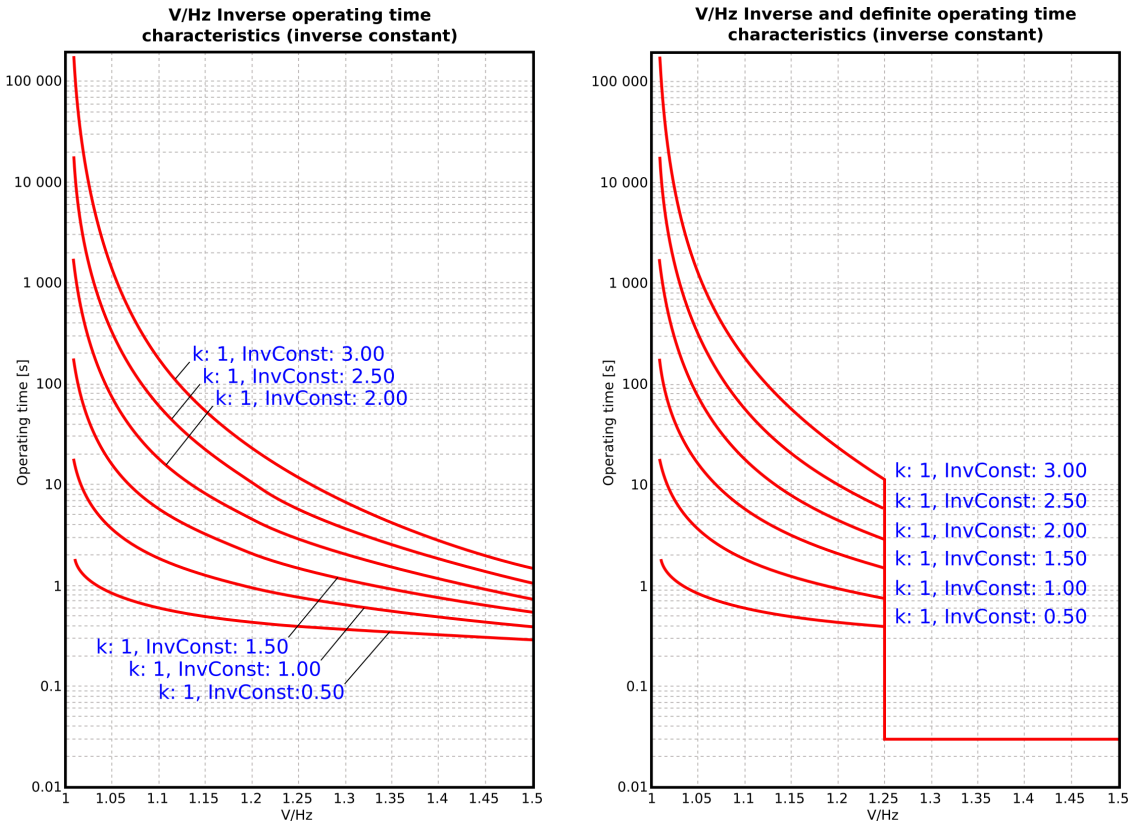

Read-only parameters

The function's *Info* page displays useful, real-time information on the state of the protection function. It is accessed either through the device's HMI display, or through the setting tool software when it is connected to the device and its Live Edit mode is active.

Table. 4.4.24 - 208. Information displayed by the function.

Name	Range	Step	Description
V/Hz> LN behaviour	• On • Blocked • Test • Test/Blocked • Off	-	Displays the mode of VHZ block. This parameter is visible only when *Allow setting of individual LN mode* is enabled in *General* menu.
V/ Hz> condition	• Normal • Start • Alarm • Trip • Blocked	-	Displays the status of the protection function.
Expected operating time	0.000...1800.000s	0.005s	Displays the expected operating time when a fault occurs.
Time remaining to trip	-1800.000...1800.000s	0.005s	When the function has detected a fault and counts down time towards a trip, this displays how much time is left before tripping occurs.
U/f atm to pick-up U/f ratio	-100.00...100.00%	0.01P_m/P_{set}	The ratio between the measured power and the pick-up value.
Nominal U/f	-100.000...100.000V/ Hz	0.001V/Hz	Nominal volts-per-hertz ratio (voltage in per-unit value divided by nominal frequency). When 50Hz is used nominal U/f
U/f at the moment	-100.000...100.000V/ Hz	0.001V/Hz	Volts-per-hertz at the moment.
U/f atm to nominal U/f ratio	-100.000...100.000V/ Hz	0.001V/Hz	Measured volts-per-hertz ratio divided by nominal volts-per-hertz ratio.

Function blocking

The blocking signal is evaluated at the start of each program cycle. The blocking signals are connected to the function's dedicated input, which can be configured in the *IO → Blocking Input Control* tab of the function.

- When the pick-up element activates and the blocking signal is not active, a START signal is generated and the function starts or continues the trip-time countdown.
- When the pick-up element activates and the blocking input signal is active, a BLOCKED signal is generated, and the function does not process the event further.
- When START signal is already active and the blocking input signal becomes active, the START signal is reset and BLOCKED signal is generated. The release-time characteristics are processed as if the fault condition had been cleared.

© Arcteq Relays Ltd
IM00021

The blocking signal needs to reach the device minimum of 5 ms before the set operating delay has passed in order for the blocking to activate in time.

Events and registers

The volts-per-hertz overexcitation protection function (abbreviated "VHZ" in event block names) generates events and registers from the status changes in the events listed below. The user can select which event messages are stored in the main event buffer: ON, OFF, or both. The events triggered by the function are recorded with a time stamp.

The function's outputs can be used for direct I/O controlling and user logic programming. The function also provides a resettable cumulative counter for the START, TRIP and BLOCKED events.

The function offers one (1) stage

Table. 4.4.24 - 209. Event messages.

Event block name	Event names
VHZ1	V/Hz (1...2) Start ON/OFF
VHZ1	V/Hz (1...2) Alarm ON/OFF
VHZ1	V/Hz (1...2) Trip ON/OFF
VHZ1	V/Hz (1...2) Block ON/OFF

The function registers its operation into the last twelve (12) time-stamped registers. The register of the function records the ON event process data for START, TRIP or BLOCKED. The table below presents the structure of the function's register content.

Table. 4.4.24 - 210. Register content.

Name	Description
Date and time	dd.mm.yyyy hh:mm:ss.mss
Event	Event name
Voltages (AB/BC/CA) pre-trig	Start/Trip -20ms voltages
Frequency pre-trig	Start/Trip -20ms frequency
Voltages (AB/BC/AC) fault	Start/Trip voltages
Frequency fault	Start/Trip frequency
Voltages (AB/BC/AC) pre-fault	Start -200ms voltages
Frequency pre-fault	Start -200ms frequency
Trip time remaining	0 ms...1800 s
Setting group in use	Setting group 1...8 active

4.4.25 Power factor protection (PF<; 55)

The power factor protection function is the ratio of active power to apparent power (cos φ = P/S). In a fully resistive load the power factor is 1.00. In partially inductive loads the power factor is under 1.00. Power factor protection cannot detect a power factor value that is too low.

Figure. 4.4.25 - 126. Operating characteristics of power factor protection.

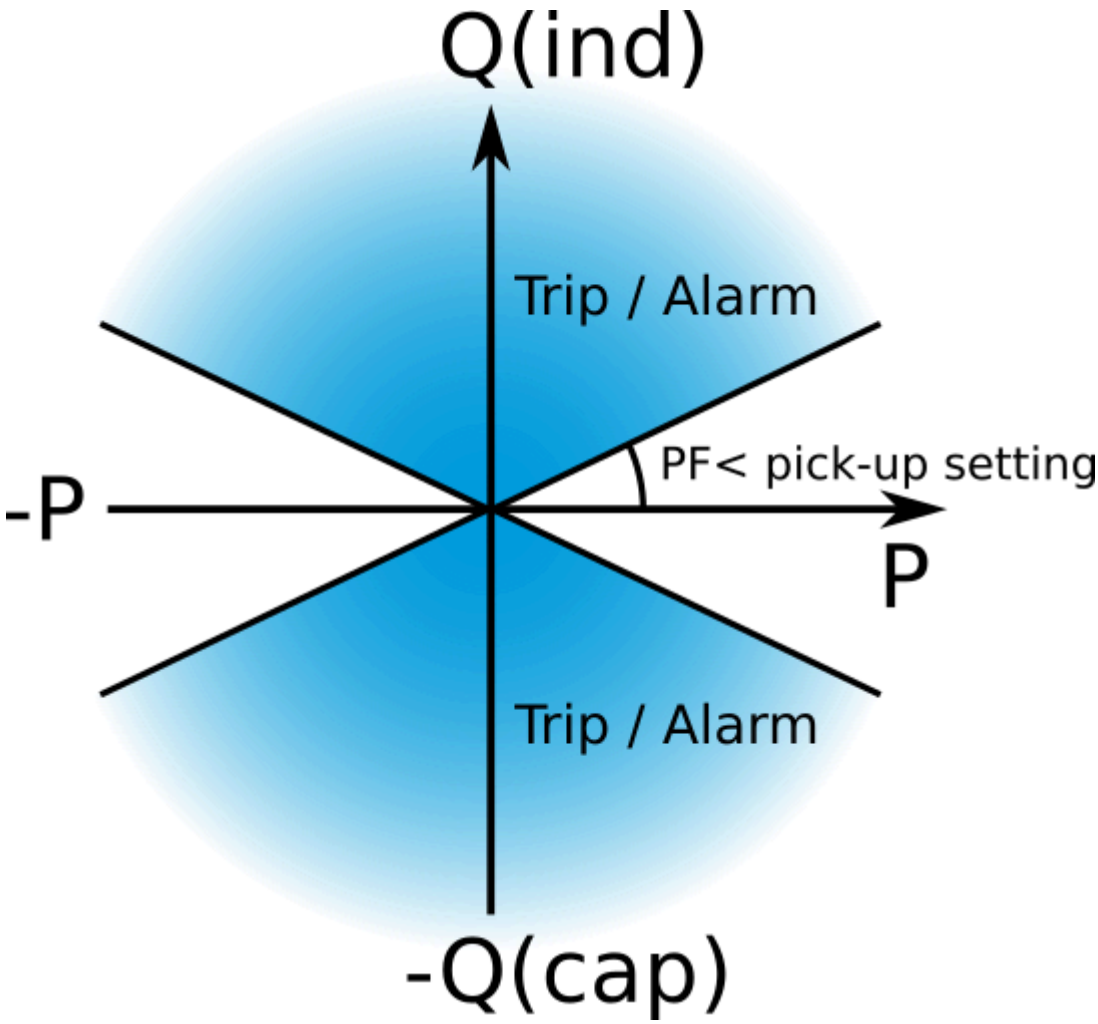

© Arcteq Relays Ltd
IM00021

Figure. 4.4.25 - 127. Simplified function block diagram of the PF> function.

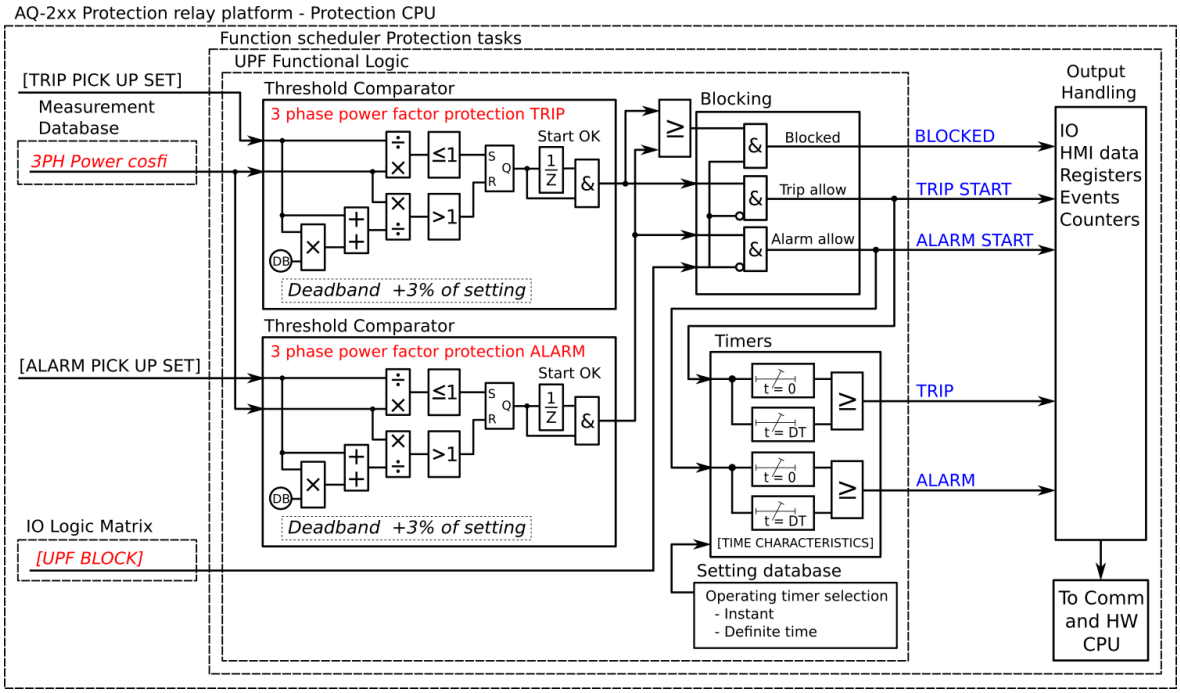

Measured input

The function block uses three phase power factor (cos phi). Please refer to "Power and energy calculation" chapter for a detailed description of how cos phi is calculated.

Table. 4.4.25 - 211. Measurement inputs of the PF< function.

Signal	Description
3PH cos φ	Three-phase cos phi (power factor)

General settings

The following general settings define the general behavior of the function. These settings are static i.e. it is not possible to change them by editing the setting group.

Table. 4.4.25 - 212. General settings of the function.

Name	Range	Default	Description
PF< LN mode	• On • Blocked • Test • Test/ Blocked • Off	On	Set mode of UPF block. This parameter is visible only when *Allow setting of individual LN mode* is enabled in *General* menu.

Name	Range	Default	Description
PF< force status to	• Normal • Start • Trip • Blocked • Alarm Start • Alarm	Normal	Force the status of the function. Visible only when *Enable stage forcing* parameter is enabled in *General* menu.
PF< measurement selection	• POW1 • POW2	POW1	Defines which power measurement module is used by the function. This setting is available if the device has more than one current measurement module.

Pick-up settings

The *Pick-up setting PF< (lead or lag) Trip* and *Pick-up setting PF< (lead or lag) Alarm* setting parameters control the the pick-up of the PF< function. They define the minimum allowed power factor before action from the function. The function constantly calculates the ratio between the pick-up settings and the measured magnitude (power factor). The reset ratio of 103 % is built into the function and is always relative to the pick-up setting value.

Setting group selection controls the operating characteristics of the function, i.e. the user or user-defined logic can change function parameters while the function is running.

Table. 4.4.25 - 213. Pick-up settings.

Name	Range	Step	Default	Description
Available modes	• Trips • Trips and alarms	-	Trips and alarms	Enables or disables alarming.
Pick-up setting PF< (lead or lag) Trip	0.05…0.99	0.01	0.8	Pick-up setting for tripping
Pick-up setting PF< (lead or lag) Alarm	0.05…0.99	0.01	0.9	Pick-up setting for alarming. This parameter is only available when "Available modes" parameter has been set to "Trip and alarm".

Read-only parameters

The function's *Info* page displays useful, real-time information on the state of the protection function. It is accessed either through the device's HMI display, or through the setting tool software when it is connected to the device and its Live Edit mode is active.

Table. 4.4.25 - 214. Information displayed by the function.

Name	Range	Step	Description
PF< LN behaviour	• On • Blocked • Test • Test/Blocked • Off	-	Displays the mode of UPF block. This parameter is visible only when *Allow setting of individual LN mode* is enabled in *General* menu.

© Arcteq Relays Ltd
IM00021

PF< condition	• Normal • Start • Trip • Blocked • Alarm Start • Alarm	-	Displays status of the protection function.
Expected alarming time	0.000...1800.000s	0.005s	Displays the expected alarming time when a fault occurs.
Time remaining to alarm	0.000...1800.000s	0.005s	When the function has detected a fault and counts down time towards an alarm, this displays how much time is left before alarm is activated.
PF_{meas} / PF_{alarm} at the moment	0.00...1250.00	0.01	The ratio between the measured power factor and the alarm pick-up value.
Expected operating time	0.000...1800.000s	0.005s	Displays the expected operating time when a fault occurs.
Time remaining to trip	-1800.000...1800.000s	0.005s	When the function has detected a fault and counts down time towards a trip, this displays how much time is left before tripping occurs.
PF_{meas} / PF_{set} at the moment	0.00...1250.00	0.01	The ratio between the measured power factor and the pick-up value.

Function blocking

The blocking signal is evaluated at the start of each program cycle. The blocking signals are connected to the function's dedicated input, which can be configured in the *IO → Blocking Input Control* tab of the function.

- When the pick-up element activates and the blocking signal is not active, a START signal is generated and the function starts or continues the trip-time countdown.
- When the pick-up element activates and the blocking input signal is active, a BLOCKED signal is generated, and the function does not process the event further.
- When START signal is already active and the blocking input signal becomes active, the START signal is reset and BLOCKED signal is generated. The release-time characteristics are processed as if the fault condition had been cleared.

The blocking signal needs to reach the device minimum of 5 ms before the set operating delay has passed in order for the blocking to activate in time.

Operating time characteristics for trip and reset

This function supports definite time delay (DT). For detailed information on these delay types please refer to the chapter "General properties of a protection function" and its section "Operating time characteristics".

Events and registers

The power factor protection function (abbreviated "UPF" in event block names) generates events and registers from the status changes in the events listed below. The user can select which event messages are stored in the main event buffer: ON, OFF, or both. The events triggered by the function are recorded with a time stamp.

The function's outputs can be used for direct I/O controlling and user logic programming. The function also provides a resettable cumulative counter for the ALARM START, ALARM, START, TRIP and BLOCKED events.

Table. 4.4.25 - 215. Event messages.

Event block name	Event names
UPF1	Block ON/OFF
UPF1	Start ON/OFF
UPF1	Trip ON/OFF
UPF1	Alarm Start ON/OFF
UPF1	Alarm ON/OFF

The function registers its operation into the last twelve (12) time-stamped registers. The register of the function records the ON event process data for START, TRIP or BLOCKED. The table below presents the structure of the function's register content.

Table. 4.4.25 - 216. Register content.

Register	Description
Date and time	dd.mm.yyyy hh:mm:ss.mss
Event	Event name
Pre-trigger PF	Start/Trip -20ms power factor
Fault PF	Start/Trip power factor
Pre-fault PF	Start -200ms power factor
Trip time remaining	0 ms...1800s
Setting group in use	Setting group 1...8 active

4.4.26 Pole slip protection (78)

Pole slipping is a phenomenon where synchronism is lost due to power swings. This can happen in extreme fault conditions which cause a transient torque on the machine. Generators might experience this if it has low excitation, because it produces a weak magnetic field. The "slip" occurs when rotor electrically and physically shifts in relation to the stator, after which the field returns the rotor back in sync with the stator. This causes high acceleration and deceleration causes stress on the generator and prime mover, which can cause winding movement, shaft fracture or worse.

© Arcteq Relays Ltd
IM00021

Figure. 4.4.26 - 128. Operating characteristics of pole slip protection.

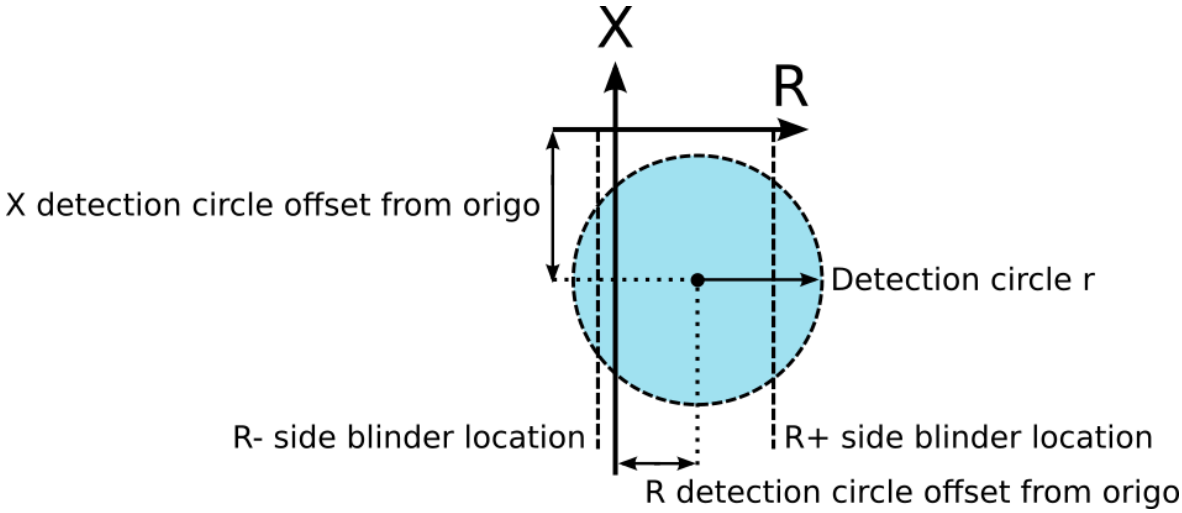

Measured input

The function block uses phase currents and phase-to-phase or phase-to-neutral voltage measurement values. These values are used for calculating positive sequence impedance.

Table. 4.4.26 - 217. Measurement inputs of the pole slip protection function.

Signal	Description
I_{L1}RMS	Fundamental frequency component of phase L1 (A) current
I_{L2}RMS	Fundamental frequency component of phase L2 (B) current
I_{L3}RMS	Fundamental frequency component of phase L3 (C) current
U_1RMS	Fundamental frequency component of voltage channel U_1/V
U_2RMS	Fundamental frequency component of voltage channel U_2/V
U_3RMS	Fundamental frequency component of voltage channel U_3/V
U_4RMS	Fundamental frequency component of voltage channel U_4/V

General settings

The following general settings define the general behavior of the function. These settings are static i.e. it is not possible to change them by editing the setting group.

Table. 4.4.26 - 218. General settings of the function.

Name	Range	Default	Description
Pole slip [78] LN mode	• On • Blocked • Test • Test/ Blocked • Off	On	Set mode of OOS block. This parameter is visible only when *Allow setting of individual LN mode* is enabled in *General* menu.

Name	Range	Default	Description
Pole slip force status to	• Normal • Start • Trip • Blocked	Normal	Force the status of the function. Visible only when *Enable stage forcing* parameter is enabled in *General* menu.

Pick-up settings

Parameters listed below determine the slip detection area. Slip detection area consists of detection circle and two side blinders. For a slip to be counted the impedance must first enter the circle, then while inside the circle the impedance must cross the blinders and then exit the circle. Keep in mind that the impedance must stay between the blinders longer than what is set to *Minimum locust traverse time between blinders* for the function to count the slip. If more than one slips are required for the function to trip the measured impedance must enter the circle from the same side each cycle. If time set to *Reset slip detection after last detected slip* has passed between slips the slip counter is reset.

Setting group selection controls the operating characteristics of the function, i.e. the user or user-defined logic can change function parameters while the function is running.

Table. 4.4.26 - 219. Pick-up settings.

Name	Range	Step	Default	Description
X detection circle offset from origin (pri)	-50 000.00...50 000.00 Ohm	0.01 Ohm	-50.00 Ohm	Moves the midpoint of circle in the X-axis (reactance).
R detection circle offset from origo (pri)	-50 000.00...50 000.00 Ohm	0.01 Ohm	0.00 Ohm	Moves the midpoint of circle in the R-axis (resistance).
Detection circle r (pri)	0.01...50 000.00 Ohm	0.01 Ohm	50.00 Ohm	Sets the radius of the detection circle.
R+ side blinder location (pri)	0.00...50 000.00 Ohm	0.01 Ohm	20.00 Ohm	R+ side blinder. Impedance must cross this level after entering the circle for the function to count a slip.
R- side blinder location (pri)	-50 000.00...0.00 Ohm	0.01 Ohm	-20.00 Ohm	R- side blinder. Impedance must cross this level after entering the circle for the function to count a slip.
Minimum locus traverse time between blinders	0.000...1800.00 s	0.005 s	0.050 s	Minimum time impedance must stay between the blinders so that the function will count a slip.
Pole slip detection limit to trip	1...5 slips	1 slips	1 slips	How many slips need to be detected for the function to trip.
Reset slip detection after last detected slip	0.000...1800.000 s	0.005 s	1.000 s	Maximum time between slips before the function resets the slip counter to zero.

© Arcteq Relays Ltd
IM00021

Figure. 4.4.26 - 129. Impedance must enter the circle first then cross the blinders and lastly exit the circle for the function to count a slip. Impedance can enter the circle from either side but it must keep entering the circle from the same side for the function to keep counting the slips.

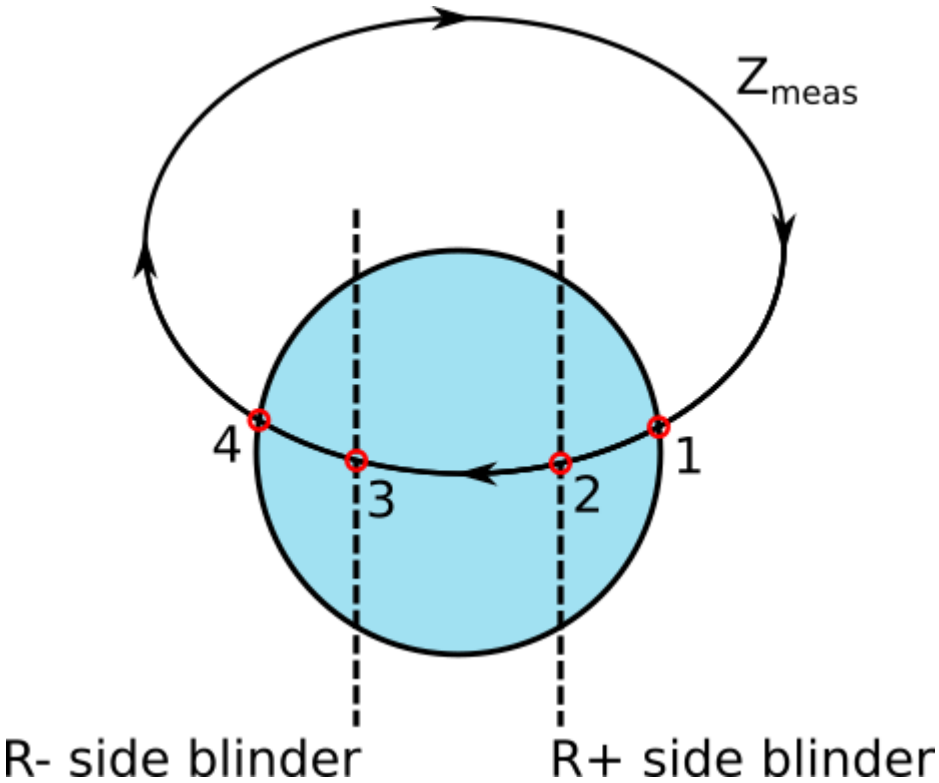

Read-only parameters

The function's *Info* page displays useful, real-time information on the state of the protection function. It is accessed either through the device's HMI display, or through the setting tool software when it is connected to the device and its Live Edit mode is active.

Table. 4.4.26 - 220. Information displayed by the function.

Name	Range	Description
Pole slip [78] LN behaviour	• On • Blocked • Test • Test/ Blocked • Off	Displays the mode of OOS block. This parameter is visible only when *Allow setting of individual LN mode* is enabled in *General* menu.
Pole slip condition	• Normal • Start • Trip • Blocked	Displays status of the protection function.
Configuration status	• Ok • Incorrect VT set • Incorrect char. Set	Displays the status of settings currently in use.

Function blocking

The blocking signal is evaluated at the start of each program cycle. The blocking signals are connected to the function's dedicated input, which can be configured in the *IO → Blocking Input Control* tab of the function.

- When the pick-up element activates and the blocking signal is not active, a START signal is generated and the function starts or continues the trip-time countdown.
- When the pick-up element activates and the blocking input signal is active, a BLOCKED signal is generated, and the function does not process the event further.
- When START signal is already active and the blocking input signal becomes active, the START signal is reset and BLOCKED signal is generated. The release-time characteristics are processed as if the fault condition had been cleared.

The blocking signal needs to reach the device minimum of 5 ms before the set operating delay has passed in order for the blocking to activate in time.

Events and registers

The pole slip protection function (abbreviated "OOS" in event block names) generates events and registers from the status changes in the events listed below. The user can select which event messages are stored in the main event buffer: ON, OFF, or both. The events triggered by the function are recorded with a time stamp.

The function's outputs can be used for direct I/O controlling and user logic programming. The function also provides a resettable cumulative counter for the START, TRIP and BLOCKED events.

Table. 4.4.26 - 221. Event messages.

Event block name	Event names
OOS1	Poleslip Detection START ON/OFF
OOS1	Poleslipt Trip ON/OFF
OOS1	Poleslip Detection BLOCKED ON/OFF

The function registers its operation into the last twelve (12) time-stamped registers. The register of the function records the ON event process data for START, TRIP or BLOCKED. The table below presents the structure of the function's register content.

Table. 4.4.26 - 222. Register content.

Register	Description
Date and time	dd.mm.yyyy hh:mm:ss.mss
Event	Event name
In blinder time	Duration of reactance being between the blinders.
Setting group in use	Setting group 1...8 active

© Arcteq Relays Ltd
IM00021

4.4.27 Machine thermal overload protection (TM>; 49M)

The thermal overload protection function for machines is used for the thermal capacity monitoring and protection of electric machines like synchronous and asynchronous motors and generators. This function can also be used for any applications with single or multiple time constansts, such as inductor chokes, certain types of transformers and any other static units which do not have active cooling apart from cables and overhead lines.

The function constantly monitors the instant values of phase TRMS currents (including harmonics up to 31st) and calculates the set thermal replica status in 5 ms cycles. The function includes a total memory function of the load current conditions according to IEC 60255-8.

The function is based on a thermal replica which represents the protected object's thermal loading in relation to the effective current in the object. The thermal replica includes the calculated thermal capacity that the "memory" uses; it is an integral function which tells apart this function from a normal overcurrent function and its operating principle for overload protection applications.

In heating and cooling situations the thermal image for this function is calculated according to the two equations described below:

Figure. 4.4.27 - 130. Long time constant thermal image calculation.

$$\theta_{tL} = \left(\left(\theta_{t-1} - \left(\frac{I_{EM}}{I_N \times k_{SF} \times k_{AMB}} \right)^2 \times e^{-\frac{t}{\tau_{1h}/\tau_{1c0}/\tau_{1cr}}} \right) + \left(\frac{I_{EM}}{I_N \times k_{SF} \times k_{AMB}} \right)^2 \right) \times (1 - W_f)$$

Where:

- θ_{t-1} = Thermal image status in a previous calculation cycle (the memory of the function)
- I_{EM} = (see below)
- I_N = Current for the 100 % thermal capacity to be used (pick-up current in p.u., with this current t_{max} achieved in time t)
- k_{SF} = Loading factor (service factor) coefficient, the maximum allowed load current in p.u., depending on the protected object
- k_{AMB} = Temperature correction factor, either from a linear approximation or from a settable ten-point thermal capacity curve
- e = Euler's number
- t = Calculation time step in seconds (0.005 s)
- τ_{1h} = Long thermal heating time constant of the protected object (in minutes)
- τ_{1c0} = Long thermal cooling time constant (motor stopped) of the protected object (in minutes)
- τ_{1cr} = Long thermal cooling time constant (motor running) of the protected object (in minutes)
- W_f = Correction factor between the times t_1 and t_2

Figure. 4.4.27 - 131. Short time constant thermal image calculation.

$$\theta_{tS} = \left(\left(\theta_{t-1} - \left(\frac{I_{EM}}{I_N \times k_{SF} \times k_{AMB}} \right)^2 \times e^{-\frac{t}{\tau_{2h}/\tau_{2c}}} \right) + \left(\frac{I_{EM}}{I_N \times k_{SF} \times k_{AMB}} \right)^2 \right) \times W_f$$

Where:

- θ_{t-1} = Thermal image status in a previous calculation cycle (the memory of the function)
- I_{EM} = (see below)
- I_N = Current for the 100 % thermal capacity to be used (pick-up current in p.u., with this current t_{max} achieved in time t)
- k_{SF} = Loading factor (service factor) coefficient, the maximum allowed load current in p.u. value, depending on the protected object
- k_{AMB} = Temperature correction factor, either from a linear approximation or from a settable ten-point thermal capacity curve
- e = Euler's number
- t = Calculation time step in seconds (0.005 s)
- τ_{2h} = Short thermal heating time constant of the protected object (in minutes)
- τ_{2c} = Short thermal cooling time constant of the protected object (in minutes)
- W_f = Correction factor between the times t_1 and t_2

The equation below is that of the effective current of the protected object including the TRMS measurement maximum phase current as well as a possible phase current unbalance condition.

$$I_{EM} = \sqrt{\left(\left(1 + \left(\left(\frac{I_2}{I_1} \right)^2 \times k_{NPS} \right) \right) \times {I_{MAX}}^2 \right)}$$

Where:

- I_1 = Calculated positive sequence current of the measured RMS phase currents
- I_2 = Calculated negative sequence current of the measured RMS phase currents
- k_{NPS} = Correction factor of the NPS current biasing to the equivalent current calculation
- I_{MAX} = Measured maximum of the three TRMS phase currents

The thermal image status ($\theta_{t\%}$, in percentages of the maximum thermal capacity used) calculation is based on the sum of the long and short time constant thermal image calculation:

$$\theta_{t\%} = (\theta_{tL} + \theta_{tS}) \times 100\%$$

The basic operating principle of the thermal replica is based on the nominal temperature rise, which is achieved when the protected object is loaded with a nominal load in a nominal ambient temperature. When the object is loaded with a nominal load for a time equal to its heating constant tau (τ), 63% of the nominal thermal capacity is used. When the loading continues until five times this given constant, the used thermal capacity approaches 100 % indefinitely but never exceeds it. With a single time constant model the cooling of the object follows this same behavior, the reverse of the heating when the current feeding is completely zero.

© Arcteq Relays Ltd
IM00021

Figure. 4.4.27 - 132. Thermal image calculation with nominal conditions: single time constant thermal replica.

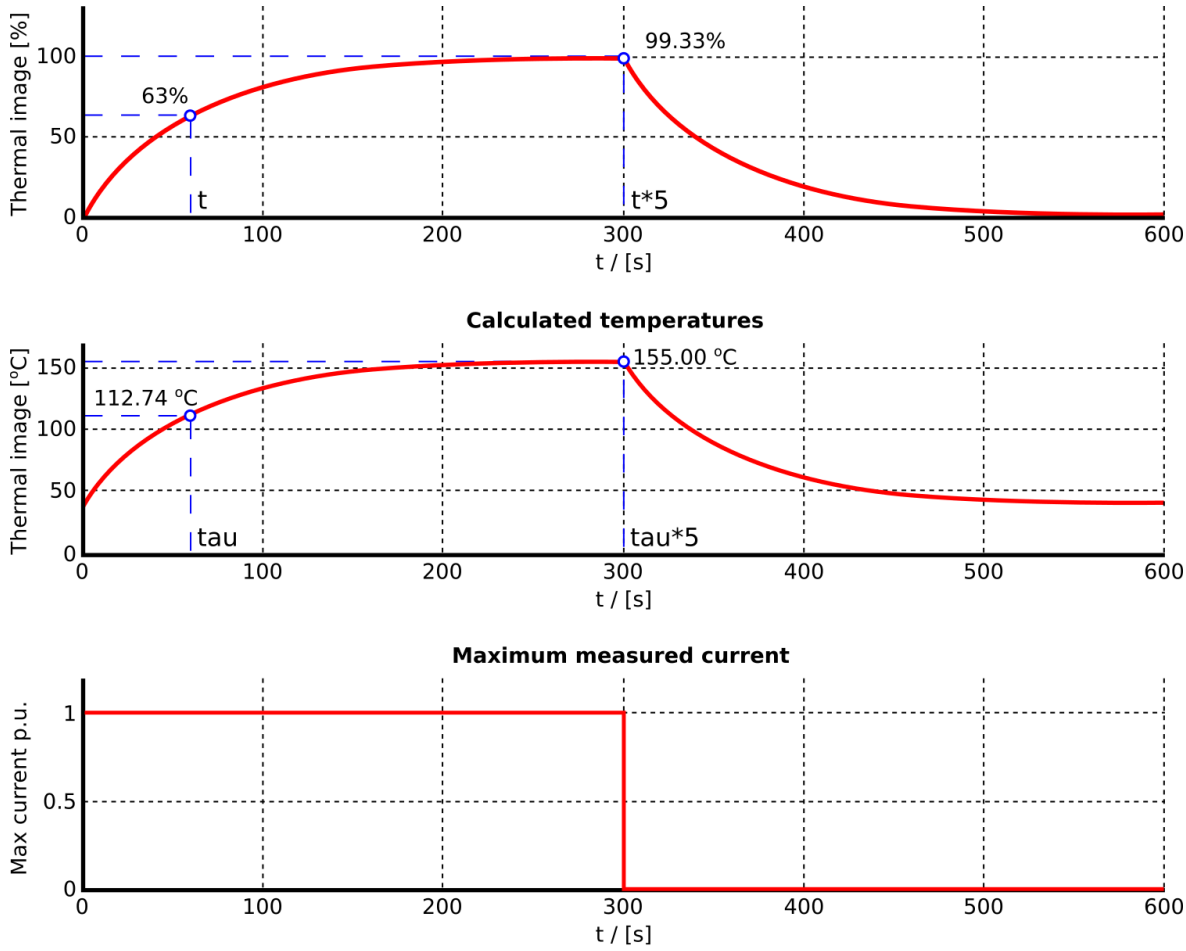

Settings

Qt-1 = 0.01 %	Max. temperature rise = 115 °C
tau = 1.00 minutes	Ambient temperature = 40 °C
Serv.Fact = 1.00	Max End. Temp = 155.00 °C
	Temp k fact = 1.00

The described behavior is based on the assumption that the monitored object has a homogenous body which generates and dissipates heat with a rate proportional to the temperature rise caused by the current squared. Installation conditions considering the prevailing conditions in the thermal replica are compensated with the ambient temperature coefficient which is constantly calculated and changing when using RTD sensor for the measurement. When the ambient temperature of the protected object is stable it can be set manually.

The ambient temperature compensation takes into account the set minimum and maximum temperatures and the load capacity of the protected object as well as the measured or set ambient temperature. The formulas below present examples of the calculation of the ambient temperature coefficient (a linear correction factor to the maximum allowed current):

$$t_{Amb<t_{min}} = k_{min}$$

$$t_{Amb<t_{ref}} = \left(\frac{1 - k_{min}}{t_{ref} - t_{min}} \times (t_{AMB} - t_{min})\right) + k_{min}$$

$$t_{Amb>t_{ref}} = \left(\frac{k_{max} - 1}{t_{max} - t_{ref}} \times (t_{AMB} - t_{ref})\right) + 1.0$$

$$t_{Amb>t_{max}} = k_{max}$$

- t_{amb} = Measured (set) ambient temperature (can be set in ˚C or ˚F)
- t_{max} = Maximum temperature (can be set in ˚C or ˚F) for the protected object
- k_{max} = Ambient temperature correction factor for the maximum temperature
- t_{min} = Minimum temperature (can be set in ˚C or ˚F) for the protected object
- k_{min} = Ambient temperature correction factor for the minimum temperature
- t_{ref} = Ambient temperature reference (can be set in ˚C or ˚F, the temperature in which the given manufacturer presumptions apply and the temperature correction factor is 1.0)

Figure. 4.4.27 - 133. Ambient temperature coefficient calculation (linear approximation, three points).

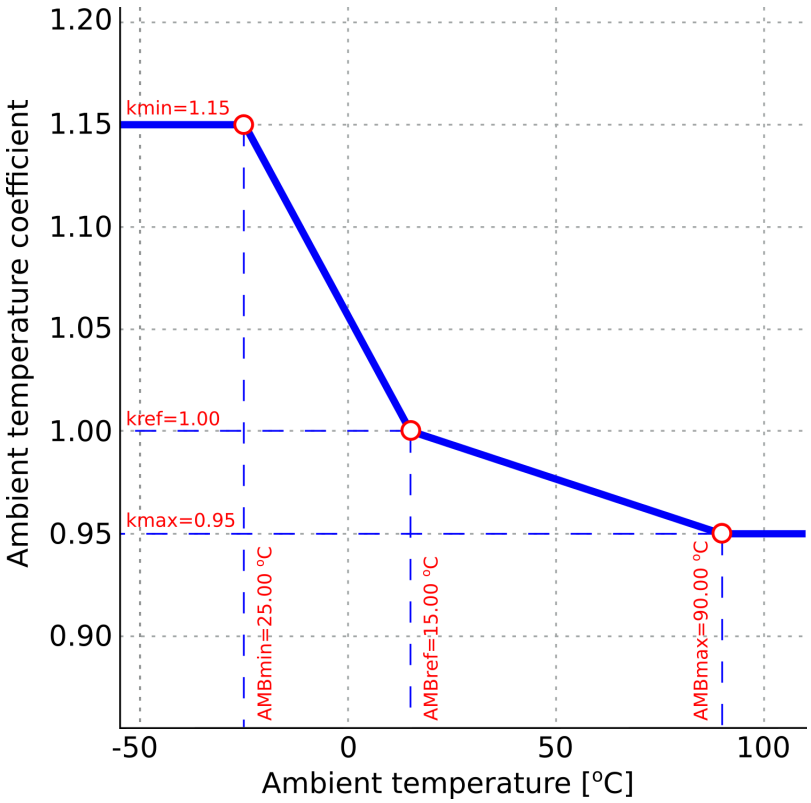

This ambient temperature coefficient relates to a nominal reference temperature. The default is +40 °C (the standard ambient temperature rating for machines) which gives the coefficient value of 1.00 for the thermal replica. The settable thermal capacity curve uses linear interpolation for ambient temperature correction with a maximum of ten (10) pairs of temperature–correction factor pairs. The temperature and coefficient pairs are set to the TM> function's settable correction curve.

© Arcteq Relays Ltd
IM00021

Figure. 4.4.27 - 134. Ambient temperature coefficient calculation (linear approximation, indefinite points).

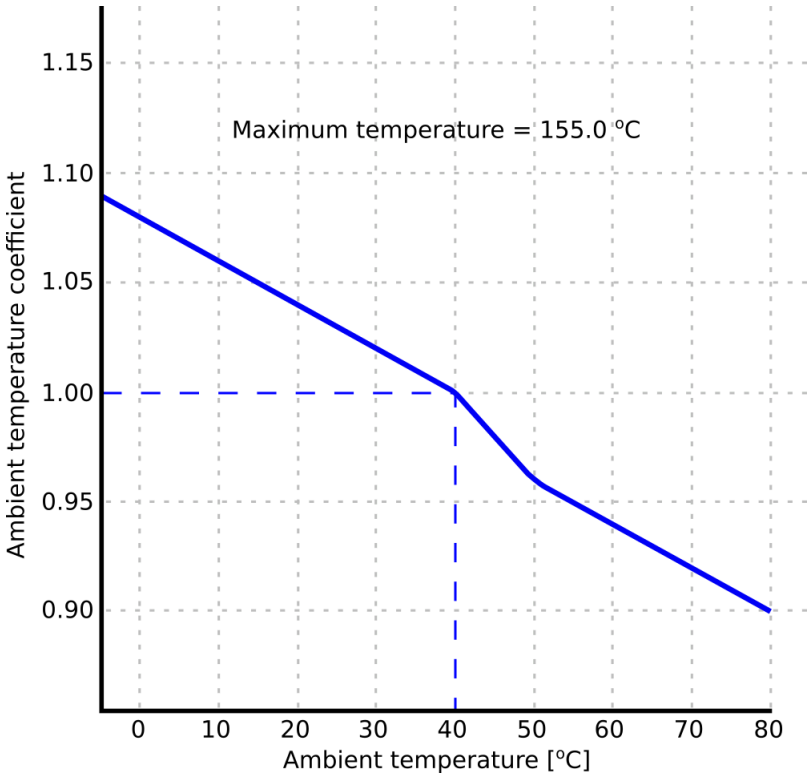

As mentioned in the previous diagram, the reference temperature for electric machines usually is +40 ˚C; this gives a correction coefficient of 1.00 which can be referred to as the nominal temperature in this case. The correction curve does not need to be set with as many points as there are available. The minimum setting is two pairs and the result is a straight line, for which the linear approximation is the better choice.

Multiple time constants

The thermal behaviour of the single time constant model was presented in the introduction of this chapter. However, it is not the optimal solution for electric machines, especially when the motor is stopped and started frequently. The following explains the main reasons as well as the differences between the single and the multiple time constant models.

By the terms of electrical machine the thermal behavior and time constants varies in between of heating and cooling as well as at certain point within heating and cooling when the loading current is decreased or increased instantly to minimum or maximum. In practice this means that the thermal replica needs to have more settable time constants than one common constant for heating and cooling, as is the case with single time constant objects like cables.

The most common practice is to separate the minimum settable time constants for heating and cooling. The main reason for this is fairly simple: the rotating machine (especially a motor) usually has a cooling fan in the same shaft with its drive, and it cools both the motor and its own surface when the motor is running. Unfortunately, the cooling stops when the motor stops, and the time constant becomes longer as the heat is slower to dissipate into the surrounding air. The cooling time constant (τ_c) may be the same as the heating time constant (τ_h) if the machine has active cooling. Additionally, the starting method (DOL/Soft start/Y-delta) also tells whether there is a need for another time constant (locked rotor, overloading situations) in order to achieve a suitable thermal image for the machine.

The following figure presents the various differences to consider when solve the time constants in the motor (as compared to single time constant objects like cables).

Figure. 4.4.27 - 135. Factors affecting the cooling and current-carrying capacity of a cable.

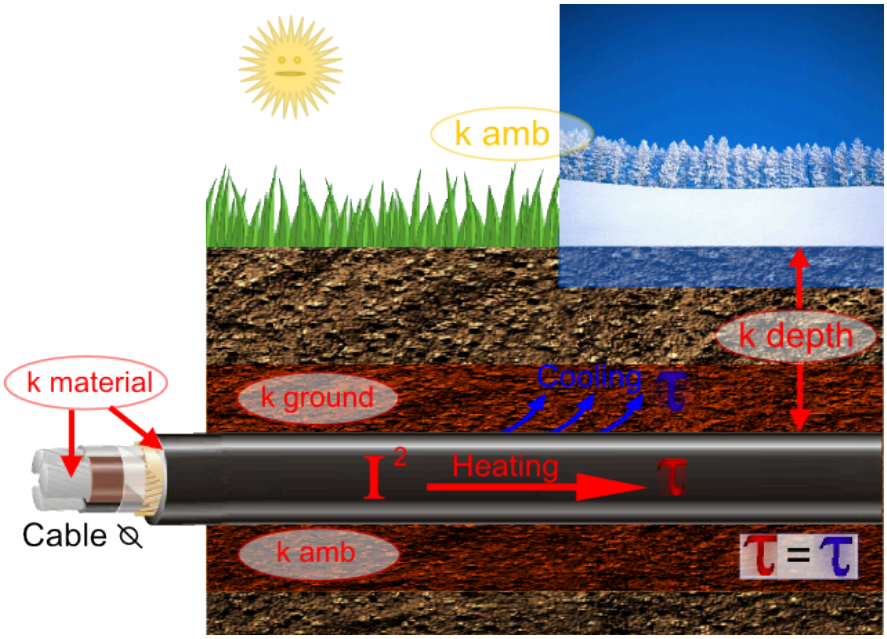

The current-carrying capacity of a cable mostly depends on the conductor's material and its diameter. The second most important factor is the cable's insulating material and how much it can withstand temperature. As can be seen in the image above, all factors (apart from the air temperature) are quite stable, especially when the cable lies below the ground frost limit in places where the outside temperature can dip well below 0 °C. The heat conduction from the cable into the surrounding ground is the same, regardless whether the cable is heating or cooling. The composition of the soil defines how well the ground conducts heat. However, these loading factors only affect the maximum current-carrying capacity of the cable; they are not the cable's time constants. The only time constant to consider is the heating time constant, which is equal to the cooling time constant for underground cables.

Figure. 4.4.27 - 136. Simplified motor construction and time constants.

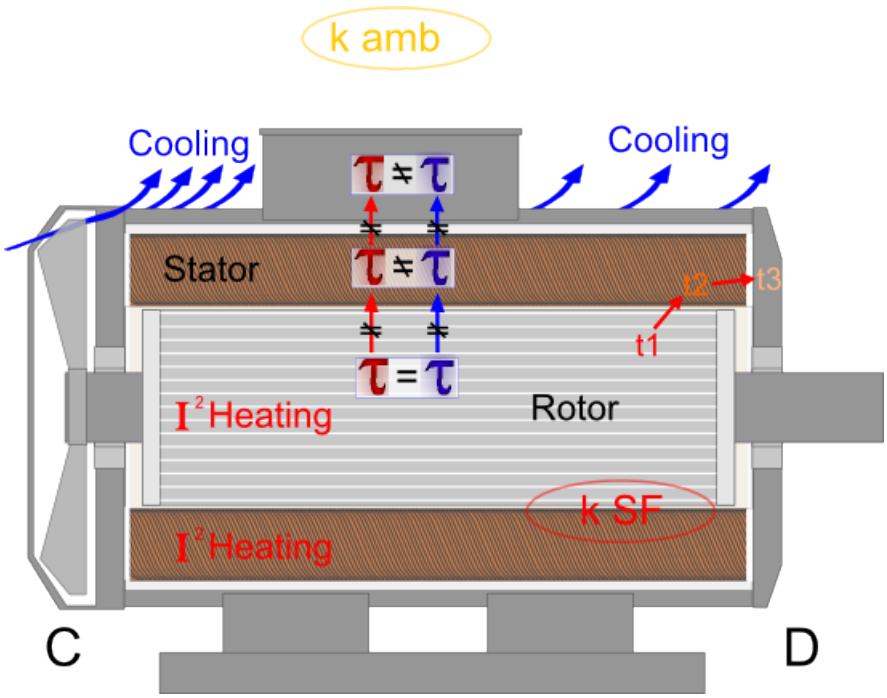

© Arcteq Relays Ltd
IM00021

Any normal induction machine such as electric motors have the following major components:

- the rotor: rotates, its shaft used as a power outlet for the motor (drive end),
- the stator: generates the electromagnetic field which induces into the rotor and makes it rotate (hence the name "induction motor"),
- the body: contains the stator and rotor.

Motors always have some kind of a cooling system. The most common cooling system is the rotor's shaft-mounted fan (cooling end). Bigger motors or slowly rotating motors can have additional fans or liquid cooling.

By observing motor thermal properties, one can find several very different components which all have their own thermal time constants. The rotor has a constant that is the same for both heating and cooling ($\tau_h = \tau_c$), the stator has a constant where the heating time constant is different from the cooling constant (τ_h =/= τ_c), and even the motor body has its own time constant for heating and cooling. Keeping the rotor and the stator from being overheated are required for the overall motor protection as it can cause insulator damage in the stator and melt the rotor bars. Both of these faults result in the malfunction of the motor.

When considering the thermal behavior, one can see another fundamental difference between single and multiple time constant objects like cables and electric motors. While the cable loading may vary during the operating conditions, currents higher than the nominal current are not part of the normal usage but always indicate a fault of some sort. Motor with direct-on-line (DOL) starting have a high starting current (up to 6-7 x I_n) and heat generation that are part of its normal operation and happen every time the motor is started. The following figure describes the process of motor heating from the ambient temperature to the nominal temperature with direct-on-line (DOL) starting.

Table. 4.4.27 - 223. Motor heating during DOL starting.

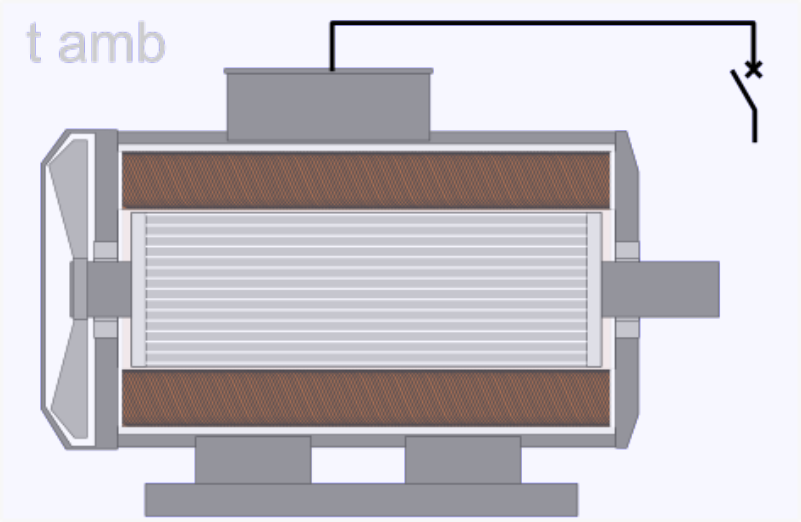	The motor is de-energized and all parts of it are in the ambient temperature.

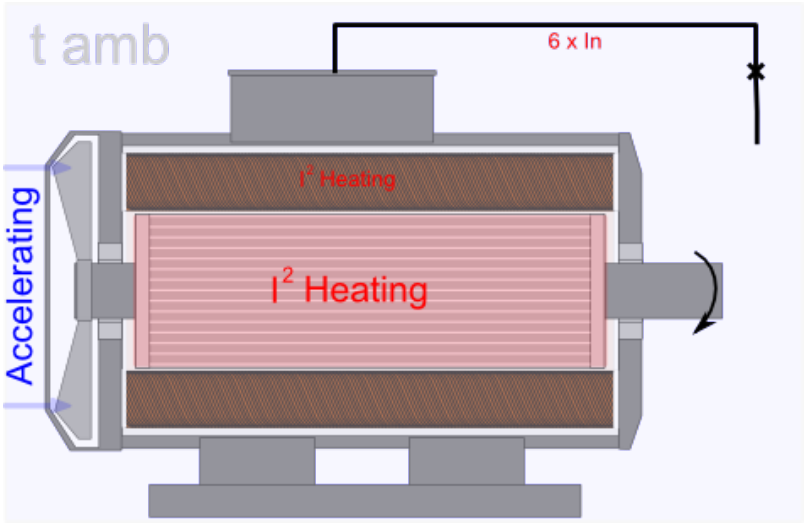

When the motor is energized the stator generates a magnetic field which induces a voltage to the squirrel cage rotor. While the rotor is not yet rotating, the induced voltage and the current it causes are at maximum in the rotor. This is due to the rotating magnetic field in the stator with synchronous speed and the rotors slip now is 1 which causes that the induced voltage to the rotor is maximum and the current is maximum also). The rotor starts to heat up very quickly compared to the stator. When the rotor is speeding up, the difference between the stator's magnetic field rotation and the rotor's magnetic field rotation decreases.

The rotor speeding up leads to the rotor current decreasing, simultaneously decreasing the rotor heating. This also makes the cooling fan start to rotate and thus cool the surface of the motor while the rotor speeds up. Depending on the size of the motor and the masses of the rotor and of the stator, the thermal capacity spent during start-up varies. The motor start-up can be rotor-limited or stator-limited, which defined which of the components limits the maximum start-up time for the motor. Most motors are rotor-limited which results in the rotor heating up to dangerously high temperatures before the stator.

© Arcteq Relays Ltd

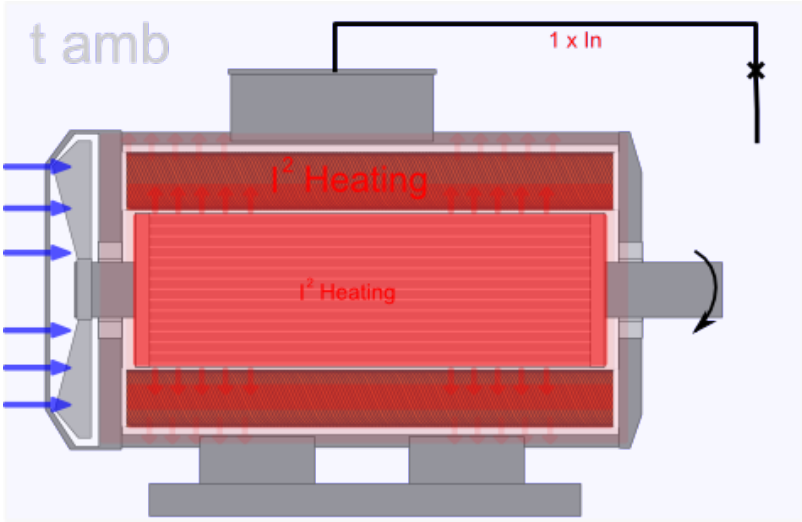	Once the motor has started and is running with or without a load, the heat generation is switched between the rotor and the stator. When the rotor's rotating is within the range of the nominal slip, the magnetic fields of the rotor and the stator "cut" within the nominal designed range and therefore the voltage and the current it causes in the rotor are also within the nominal range. Now, when the motor is loaded or overloaded while still rotating, the generated overheating is only experienced by the stator (unless the load is so big that it stalls the motor and the motor thinks it is back at the start with a non-rotating rotor). The cooling of the motor with a rotor shaft-mounted fan is operational after the starting. Additionally, the stator windings conduct the heat generated in the rotor during starting and into the motor's body. This heat transfer (rotor to stator, stator to body) also depends on the masses of motor's components. In big motors the body can be slightly warm while the rotor and/or stator have completely melted because they have not been able to transfer the heat quickly enough into the body.

Table. 4.4.27 - 224. Motor heating during overloading and motor cooling.

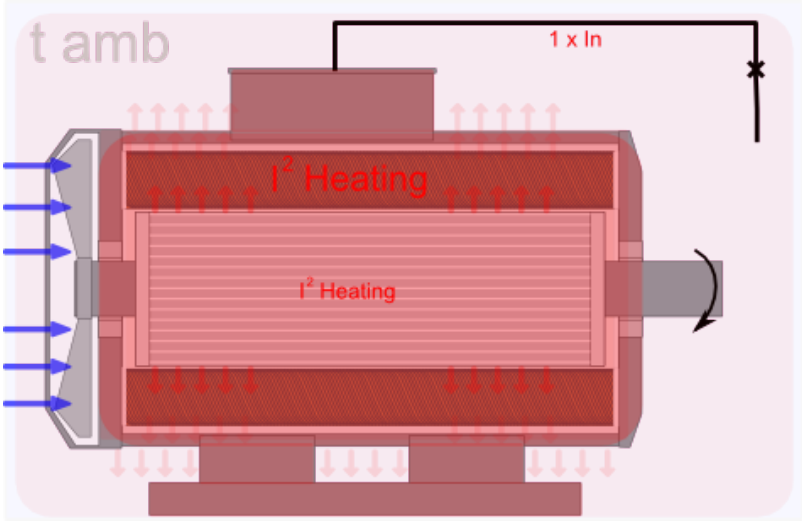	The motor is said to be running in its nominal temperature, when the motor is run with a nominal load, it has enough time for the temperatures to stabilize (5 x time constant) and the final temperatures are reached. Now, the heat transfer is stabilized and the heat generated in the motor is transferred to the surrounding air and the temperatures of the internal components are not increasing any longer.

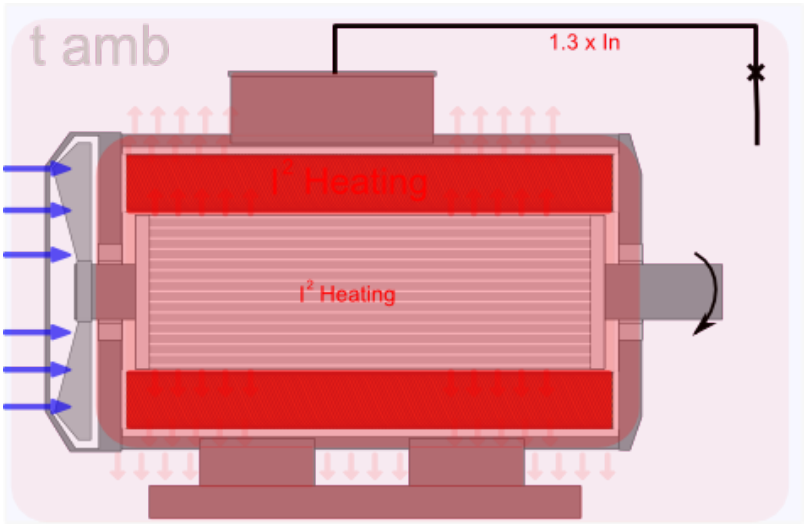	If the motor is overloaded, the stator winding starts to heat up according to its heating time constant. If the overload is not released in time, it can lead to the melting of the stator's winding insulations which in turn leads to a short-circuit; the motor is said to "burn". This situation does not differ much from the rotor's nominal conditions. When the load increases, the slip increases slightly as well and causes a small increase to the induced voltage and current. However, when rotating the heating does not differ significantly from the nominal load.
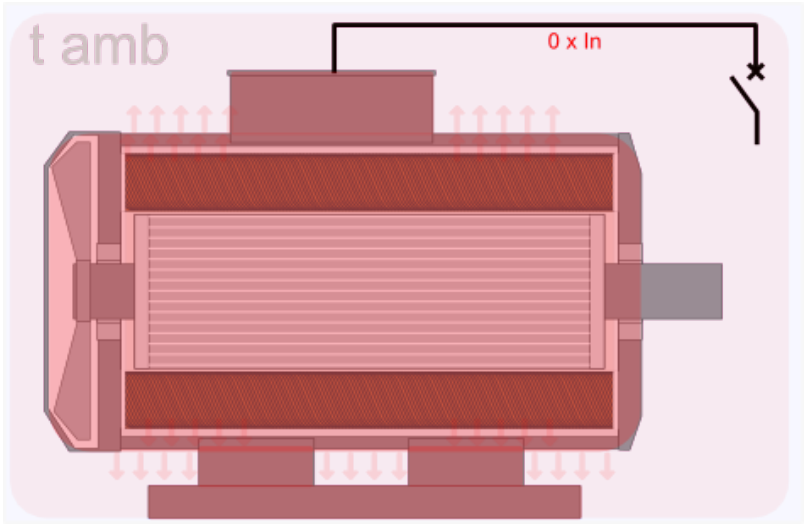	When a hot motor is de-energized the temperatures inside the motor start to stabilize. The hottest part of the motor is the rotor: its heat is transferred to the motor body through the stator windings and from the body to the surrounding air. This is why it seems that the motor body's temperature keeps rising even after a surface-cooled motor is stopped. The stopped motor cooling follows the same equation than heating, with one exception: when the surrounding air is not moving (as the fan has stopped) and the air temperature is increasing, the cooling is faster in the beginning and slows over time as the temperature difference decreases (since heat is transferred slower than in the beginning of the cooling). When the motor is run with a cyclic load, the start and stop applications for the cooling of the motor have to be modeled accurately in the thermal replica in order to avoid a situation where the calculated used thermal capacity "runs" from the actual used thermal capacity causing the protection to overshoot significantly.

The previous figures presented the thermal behavior of a motor on a theoretical level. In reality, the temperature of a rotor inside the motor windings can also be measured with RTD elements. The rotor temperature is highest on the drive end becuase the cooling is the weakest there (as can be seen in the image below).

© Arcteq Relays Ltd
IM00021

Figure. 4.4.27 - 137. Running motor's temperature with thermal image camera.

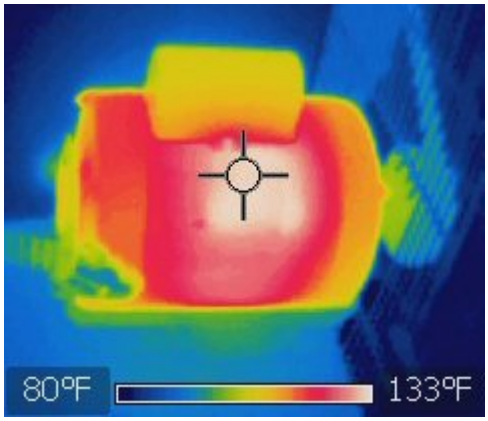

Measuring the rotor's temperature is very complicated due to its rotating nature. This is why normally there are no measurements available and why the protection of the rotor always requires a calculated thermal image. Relying solely on the measurements from RTDs installed in the motor's stator windings is not recommended as they mey not be in the actual hot spot and thus give false readings. For these reasons motor protection should not be either thermal images or RTDs but rather a combination of them both for accurate monitoring of the motor's temperature.

Thermal image modeling in protection devices require certain things to be ensured for the model to correctly match the motor thermal behavior. As was seen in the previous section, a motor usually has many states which differ from one another in terms of heating and of the parts in danger of damage. Sometimes the thermal image needs to be adjusted and fine-tuned for the application so that it matches the motor's actual temperature perfectly. This is why the thermal replica needs to offer enough setting points for various situations where the motor may be running at that time. The device needs to recognize these situations so that the thermal model can be updated correctly.

Thermal image characteristics and operating modes

To demonstrate the various settings available in the thermal image, the following figure presents the data from a field test: a motor was loaded with a stable load, run until the final temperature was reached and then de-energized and left to cool. The motor temperature was monitored with RTDs installed into the drive end of the protection device. The motor was loaded with a nominal current, its service factor was 1.15 and the ambient temperature was measured to be 24 degrees Celsius. In this case the motor was started without a load, and the loading was increased directly after starting in order to concentrate the heating effects of stable loading.

Figure. 4.4.27 - 138. Measured motor temperature in heating/cooling test.

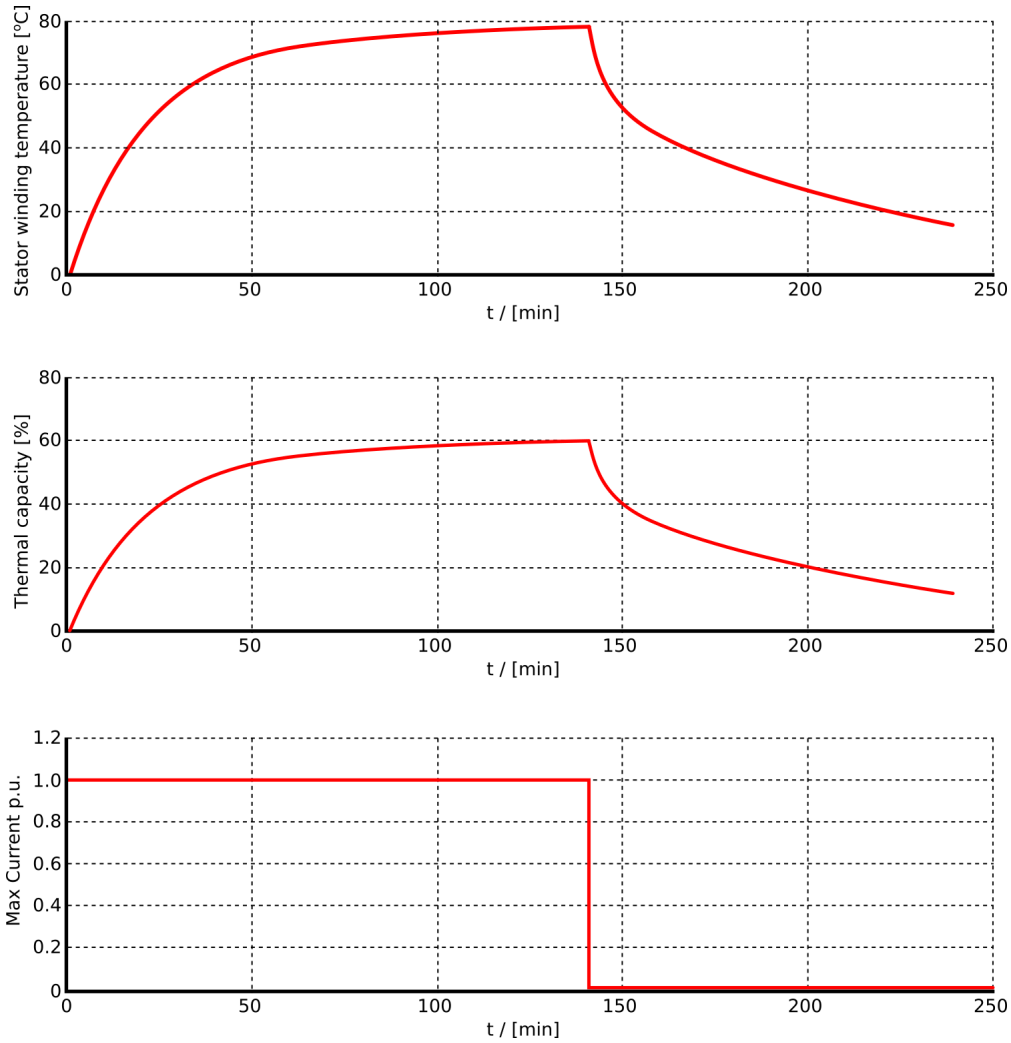

© Arcteq Relays Ltd
IM00021

Figure. 4.4.27 - 139. Matching thermal replicas to the measured thermal capacity of the motor.

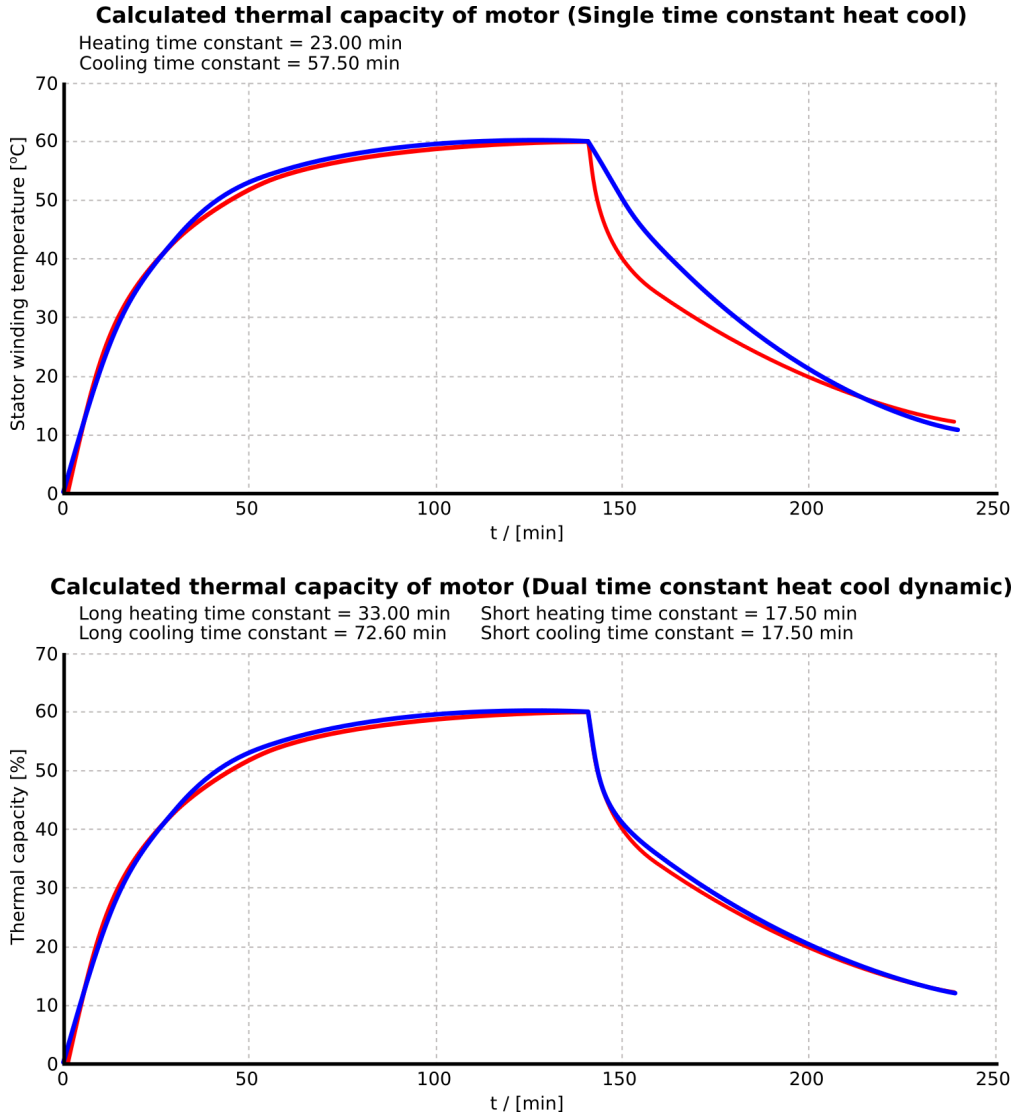

As can be seen in the figures above, when the motor is loaded with a constant current both of the replicas (single and dual time constant) follow the motor heating quite accurately. The operational difference is during cooling. With a single cooling time constant the replica does not follow the actual cooling of the motor and the match can be said to be very poor. With dynamically-controlled cooling time constants the match is very accurate. If this motor were used for cyclic loads with repeating cooling times, the single time constant model would stretch into the next duty cycle and probably cause unnecessary alarms or even trips eventhough the motor were till running in safe temperatures.

Thermal trip curves

Motor thermal curves are useful when studying motor heating in possible overload and start-up situations. These are usually available upon request from manufacturers, and the function operation can be set according to these.

Figure. 4.4.27 - 140. Example of thermal limit curves in a motor.

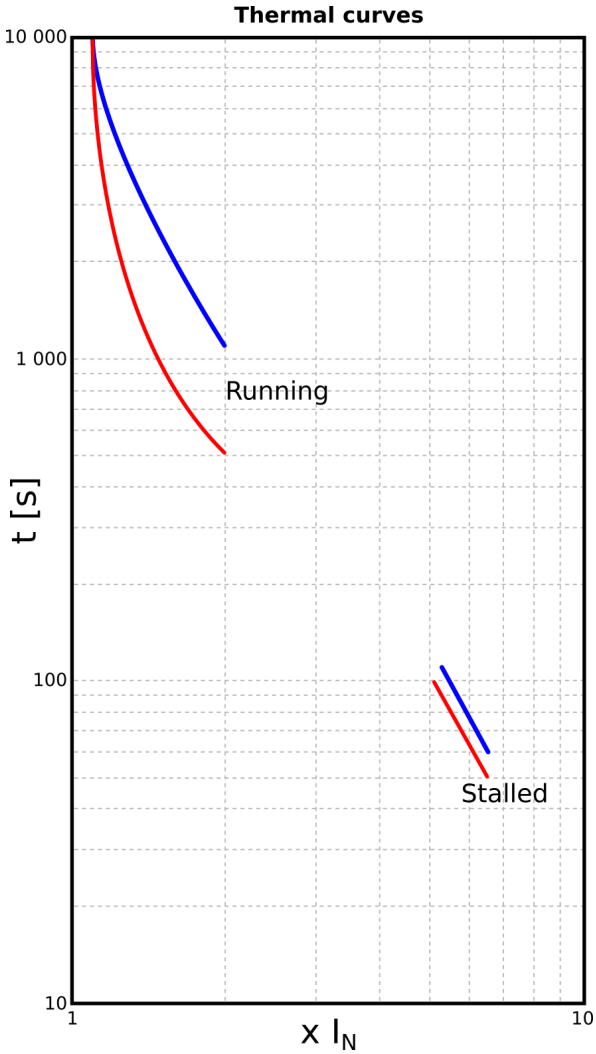

From motor thermal limit curves –if available– one can see the time constants for overloading as well as the safe stall times for hot and cold situations. Additionally, the cooling time constant must be checked from the motor datasheet or alternatively measured. From the image above one can estimate the safe stall time in cold situations to be approximately 80 seconds, and in hot situation approximately 67 seconds. When the thermal limit curves are available, the operation of the thermal replica can be set very accurately for both overloading and stall conditions.

The cooling time constant as presented in the previous example is very crucial in the case of variable duty cycle motor applications. If the motor is continuously running with a constant load, the cooling time constant is not that significant and can be estimated to be e.g. two to three times longer than the heating time constant.

© Arcteq Relays Ltd
IM00021

Figure. 4.4.27 - 141. Comparing single time constant thermal replica tripping curves to given motor thermal characteristics.

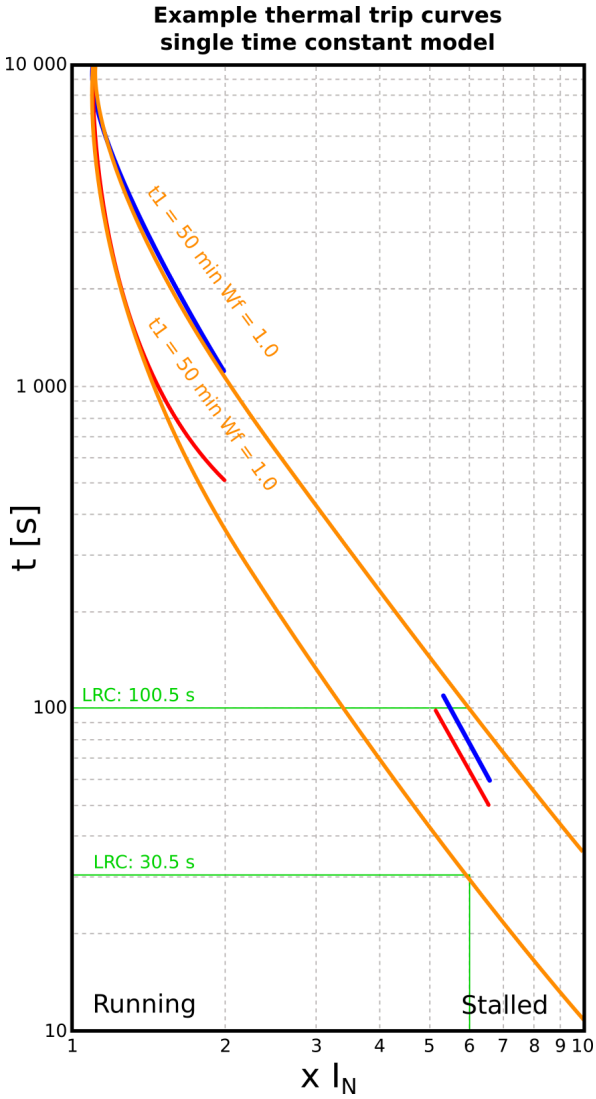

Figure. 4.4.27 - 142. Comparing dual time constant thermal replica tripping curves to given motor thermal characteristics.

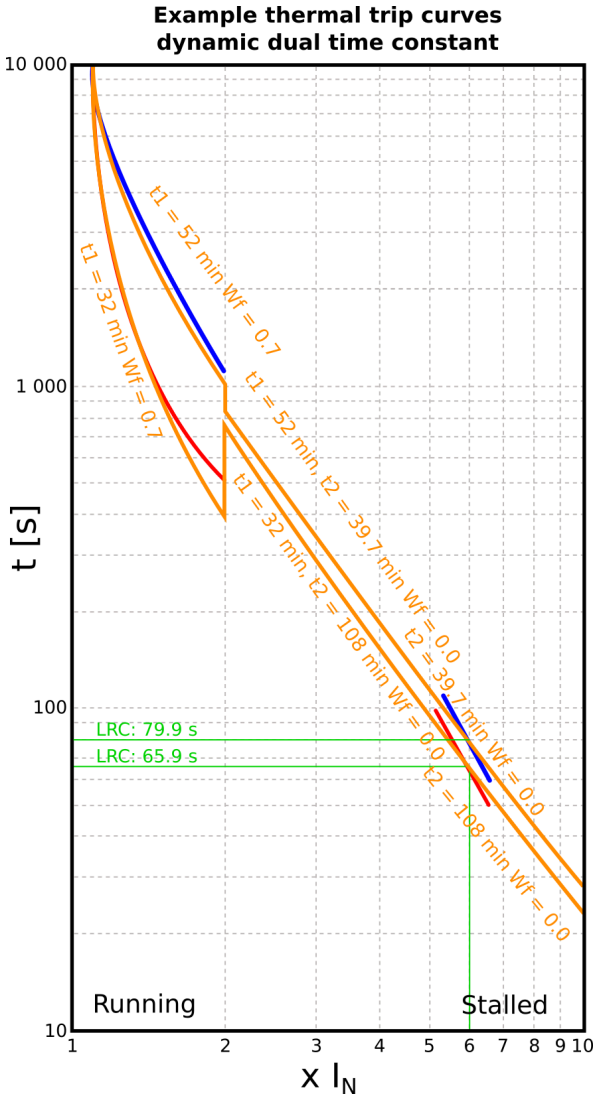

As the figures above have shown, with estimated time constants from the motor thermal limit curves the single time constant model underprotects the motor in the stall condition when the motor is cold. When the motor is hot the model overprotects with a heavy hand, allowing the motor only 30.5 seconds of stalling time of the approximately 67 seconds the motor can withstand. When dual time constants and dynamic time constants are in use, the function automatically selects the correct tripping curves for the thermal replica according to the settings, producing therefore an exact thermal image response (as compared to the single time constant thermal image). In overload conditions the response from both of the thermal replicas is acceptable as even a small overshoot is noticed when the motor is hot. In the curve simulations the hot condition was defined as 70 % of the thermal capacity.

The following figures present the tripping and cooling curves of the thermal replica.

© Arcteq Relays Ltd
IM00021

Figure. 4.4.27 - 143. Thermal tripping curves with single time constant, pre-load 0% (cold).

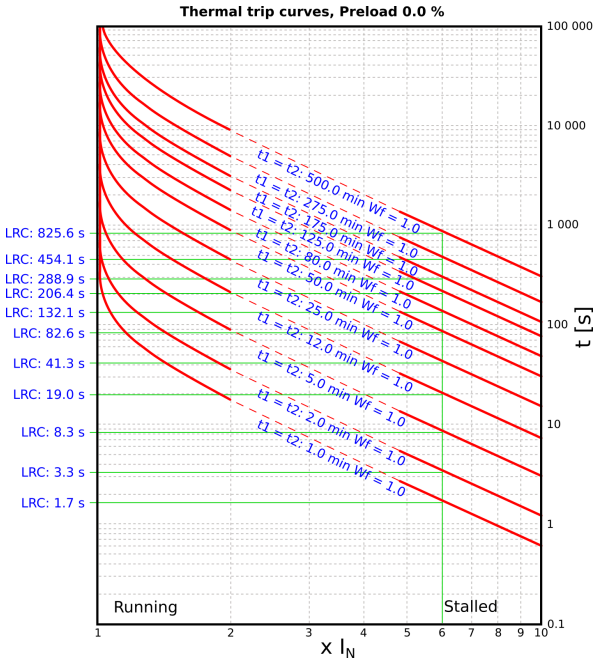

Figure. 4.4.27 - 144. Thermal tripping curves with single time constant, pre-load 90% (hot).

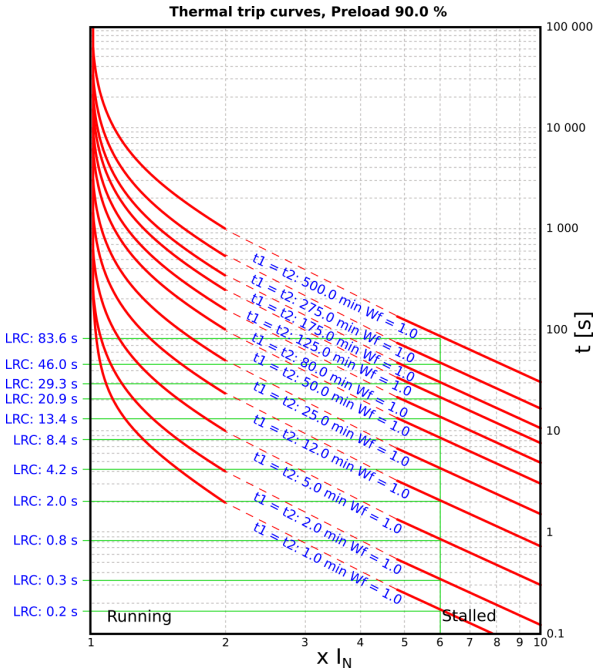

Figure. 4.4.27 - 145. Thermal tripping curves with dual dynamic time constants and correction factor, pre-load 0% (cold)

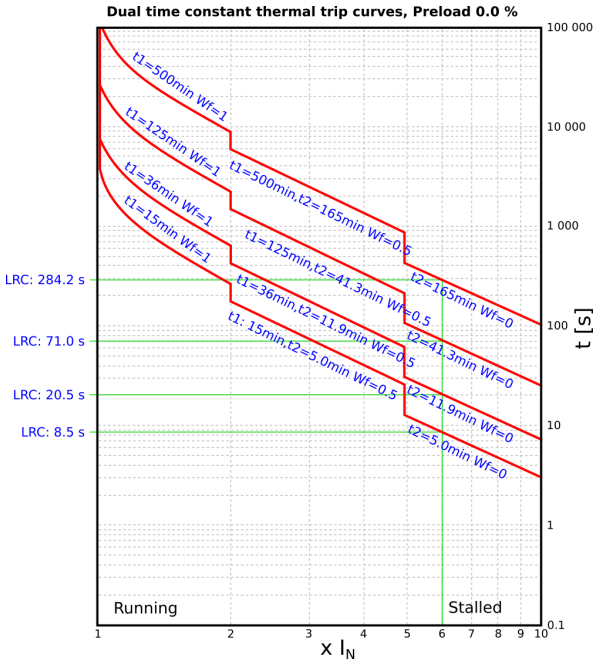

Figure. 4.4.27 - 146. Thermal tripping curves with dual dynamic time constants and correction factor, pre-load 90% (hot).

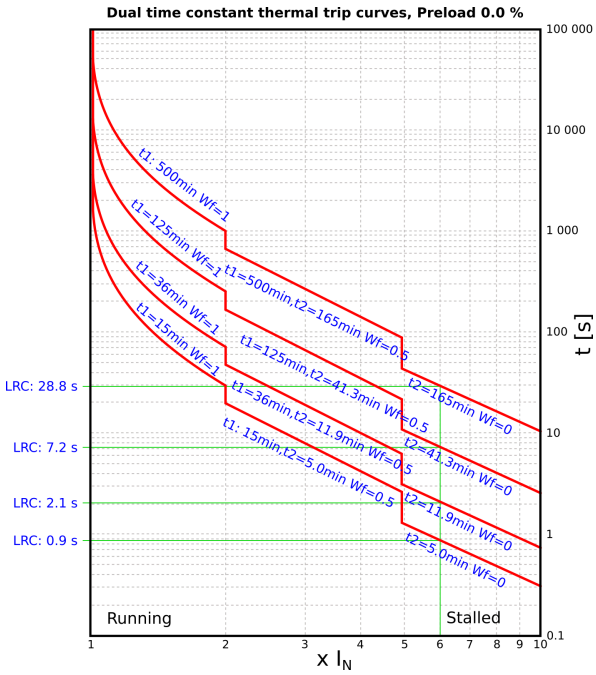

© Arcteq Relays Ltd
IM00021

Figure. 4.4.27 - 147. Thermal cooling curves, single cooling time constant.

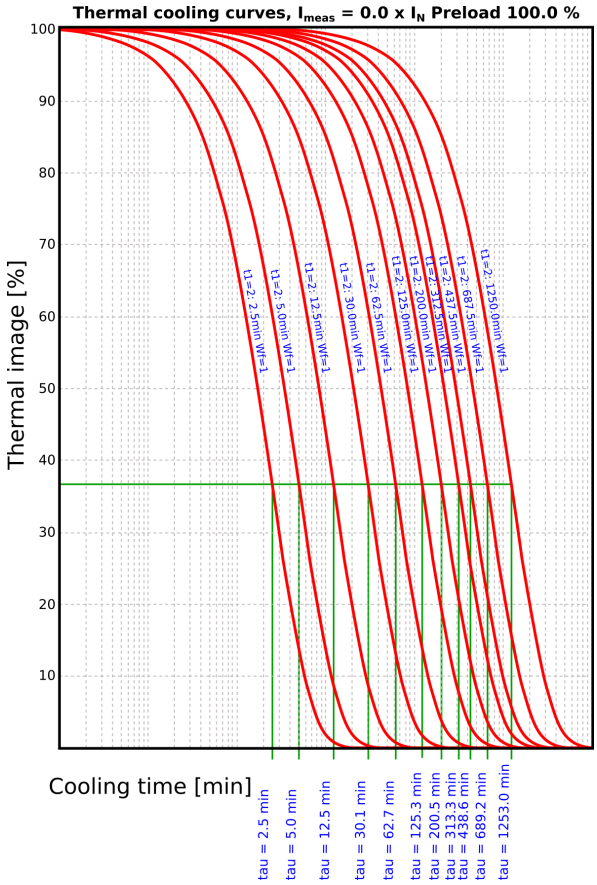

Figure. 4.4.27 - 148. Thermal cooling curves, dynamic dual time constant.

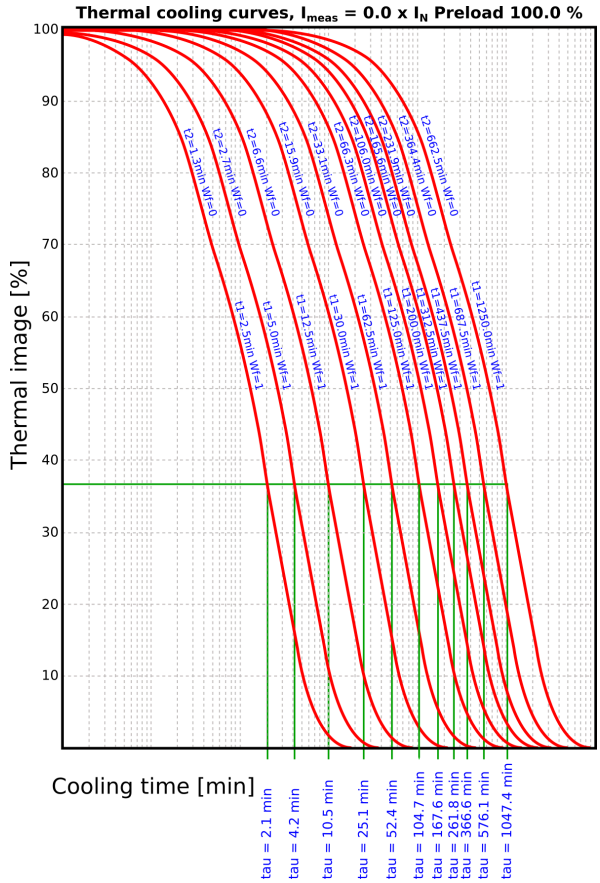

Figure. 4.4.27 - 149. Thermal cooling curves, dynamic triple time constant (motor is running without load in the first part with dedicated time constant).

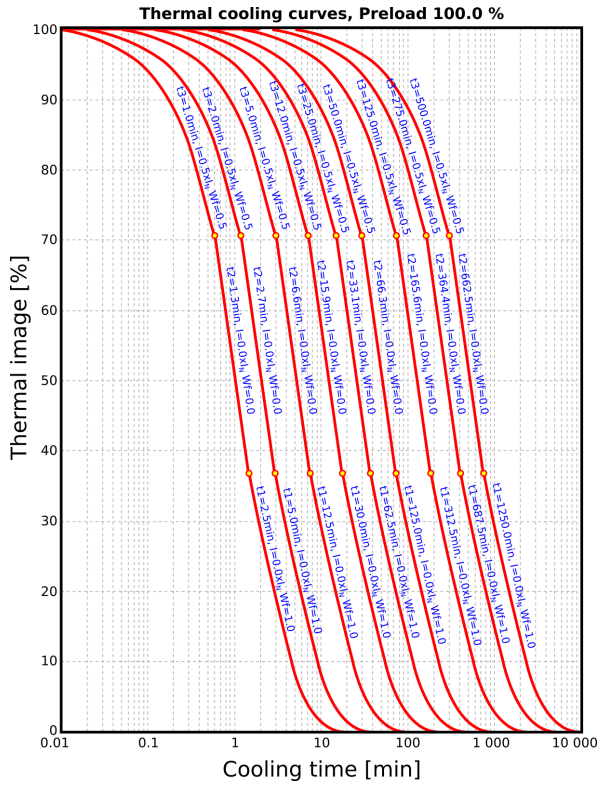

© Arcteq Relays Ltd
IM00021

Figure. 4.4.27 - 150. NPS-biased thermal trip curves with k_{NPS} value of 1.

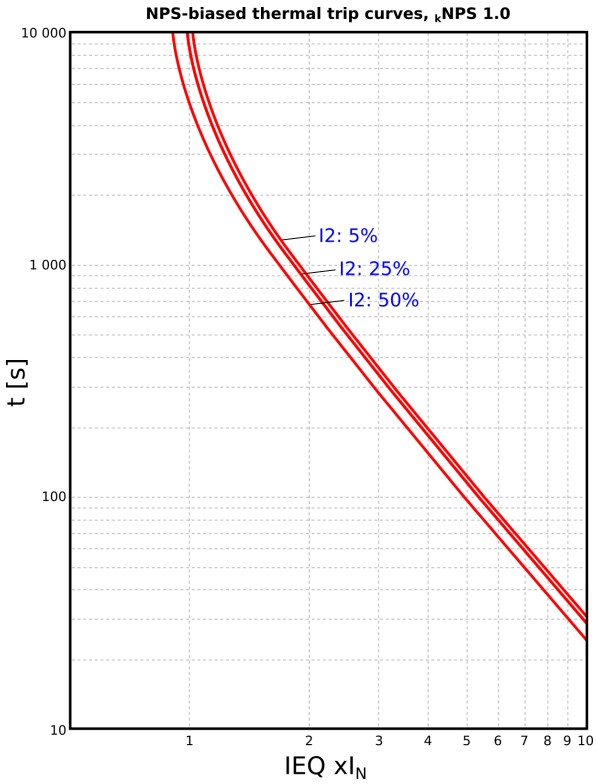

Figure. 4.4.27 - 151. NPS-biased thermal trip curves with k_{NPS} value of 3.

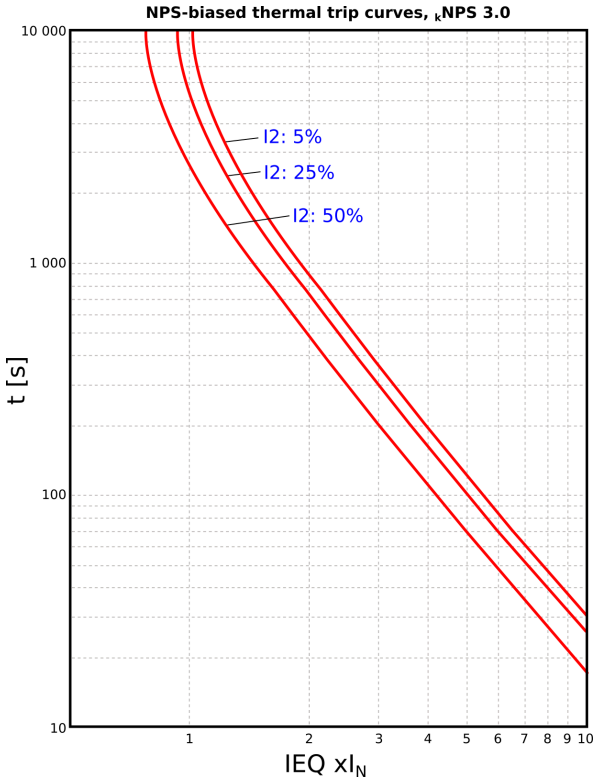

Figure. 4.4.27 - 152. NPS-biased thermal trip curves with k_{NPS} value of 7.

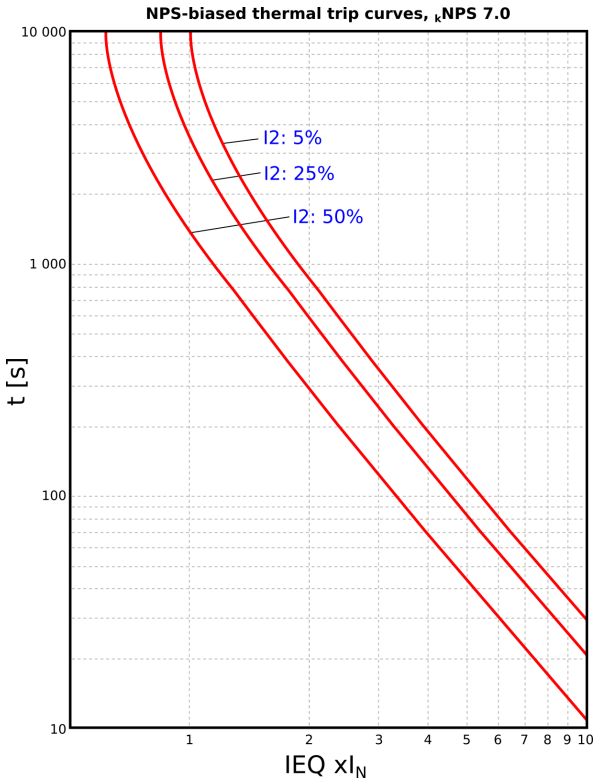

Figure. 4.4.27 - 153. NPS-biased thermal trip curves with k_{NPS} value of 10.

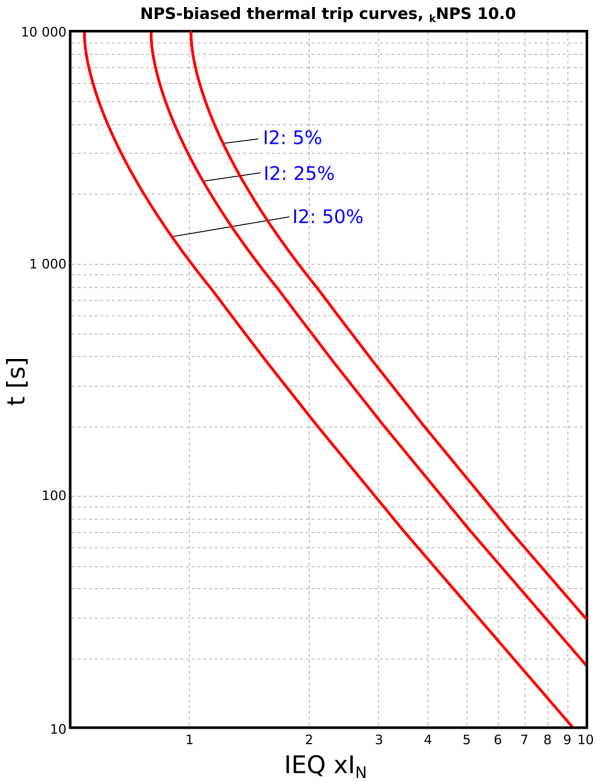

© Arcteq Relays Ltd
IM00021

Function inputs and outputs

The blocking signal and the setting group selection control the operating characteristics of the function, i.e. the user or user-defined logic can change function parameters while the function is running. The function has a total of eight (8) setting groups available.

Figure. 4.4.27 - 154. Simplified function block diagram of the TM> function.

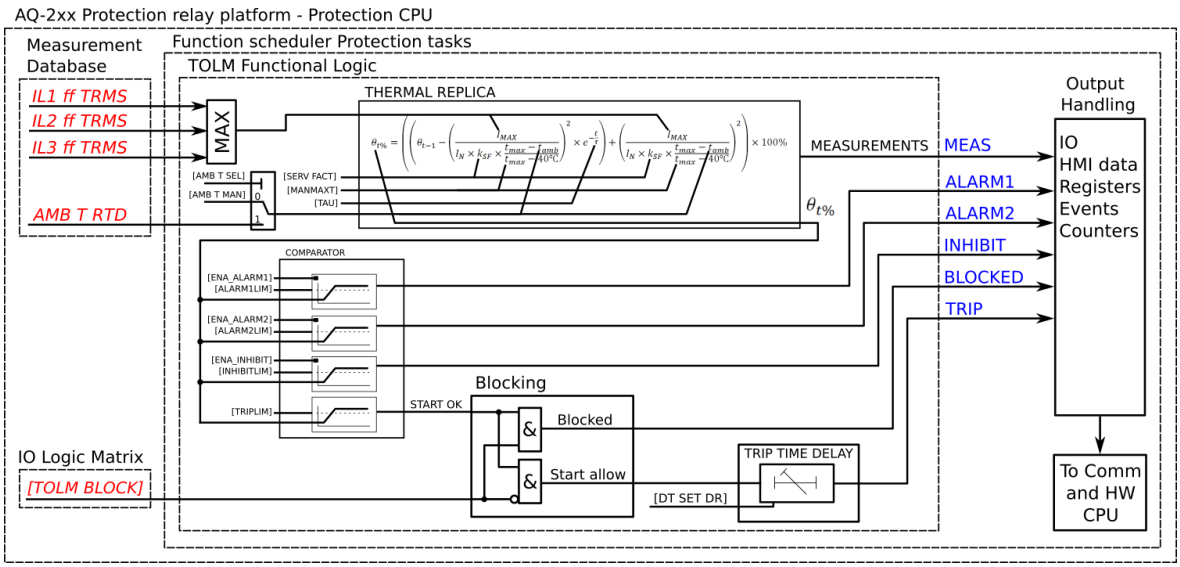

Measured input

The function block uses phase current measurement values. The function block uses TRMS values from the whole harmonic specter of 32 components. RTD measurement can be used for measuring the ambient temperature.

Table. 4.4.27 - 225. Measurement inputs of the TM> function.

Signal	Description
I_{L1}TRMS	TRMS measurement of phase L1 (A) current
I_{L2}TRMS	TRMS measurement of phase L2 (B) current
I_{L3}TRMS	TRMS measurement of phase L3 (C) current
RTD	Temperature measurement for the ambient correction

Setting parameters

Table. 4.4.27 - 226. General settings (not selectable under setting groups)

Name	Range	Default	Description
TM> LN mode	• On • Blocked • Test • Test/ Blocked • Off	On	Displays the mode of TOLM block. This parameter is visible only when *Allow setting of individual LN mode* is enabled in *General* menu.

Name	Range	Default	Description
TM> mode	• Disabled • Activated	Disabled	The selection of the function is activated or disabled in the configuration. By default it is not in use.
TM> Status Force to	• Normal • Blocked • Alarm1 On • Alarm2 On • Inhibit On • Trip On	Normal	Force the status of the function. Visible only when *Enable stage forcing* parameter is enabled in *General* menu.
Temp C or F deg	• C • F	C	The selection of whether the temperature values of the thermal image and RTD compensation are shown in Celsius or in Fahrenheit.

Table. 4.4.27 - 227. Settings of the motor status monitoring function and how they are shared by other protection functions.

Name	Range	Step	Default	Description
Motor In Scaled	0.1...40.0xI_n	0.1xI_n	-	The motor's nominal current scaled to per unit. If the user selects *Object In* in the CT settings, this value should be 1.00. If scaled to the CT nominal, this value may vary.
Motor In A	0.1 ... 5000.0A	0.1A	-	The motor's nominal current in amperes.
Nominal starting current	0.1…40.0xI_n	0.1xI_n	6.0xI_n	The motor's locked rotor current with the nominal voltage. This setting is used for automatic curve selection and calculation. Also, the nominal starting capacity calculation is based on this value.
Nominal starting current A	0.1...5000.0A	0.1A	-	The motor's locked rotor current in amperes.
Min locked rotor current	0.1…40.0xI_n	0.1xI_n	3.5xI_n	The motor's minimum locked rotor current. This setting defines the current limit for when this current is exceeded while the automatic curve selection and the control only short time constant (stall) are in use.
Min locked rotor current A	0.1...5000.0A	0.1A	-	The motor's minimum locked rotor current. This setting defines the current limit for when this current is exceeded while the automatic curve selection and the control only short time constant (stall) are in use.
Max locked rotor current	0.1…40.0xI_n	0.1xI_n	7.5xI_n	The maximum locked rotor current of the motor. This setting defines the current limit which is maximum current for the motor to draw in locked rotor situation (starting or stalled). If the measured current exceeds this setting limit it is considered to be overcurrent fault and corresponding measures can be applied to disconnect the feeder and motor from the supply.

© Arcteq Relays Ltd
IM00021

Name	Range	Step	Default	Description
Max locked rotor current A	0.1...5000.0A	0.1A	-	The maximum locked rotor current in amperes.
Max overload current	0.1…40.0xI_n	0.1xI_n	2.0xI_n	The motor's maximum overload current. Exceeding this setting stalls the motor. This setting defines when the thermal replica switches to the short (stall) time constant. As long as the current stays below this setting value, the motor should run even when overloaded.
Max overload current A	0.1...5000.0A	0.1A	-	The maximum overload current of the motor in amperes.
No load current <	0.1…40.0xI_n	0.1xI_n	0.2xI_n	The motor's no load current. This setting defines the "Stopped" condition when the current is below this setting value. Also, when the current is below this value, the undercurrent protection stage is locked.
No load current < A	0.1...5000.0A	0.1A	-	The motor's no load current in amperes.
Motor service factor	0.01…5.00xI_n	0.01xI_n	1.00xI_n	Service factor which corrects the maximum allowed loading according to various conditions (e.g. installation, construction, etc.) which vary from the presumption conditions. Frequently motors are stamped to a service factor of 1.15: this means that they can withstand a continuous 15% overloading from the rated current (as this is not necessary in all conditions, it is recommended to consult the motor's datasheet or manual for details). If the service factor is not known, this parameter should be left at its default setting of 1.00 x I_n.
Hot condition theta limit	0.0…100.0%	0.1%	70%	Setting the thermal limit for a hot motor and a cold motor. When this setting value is not exceeded while a locked rotor situation occurs, the function uses a cold stall curve adjusted with the actually used thermal capacity. The function uses a hot stall curve when this setting value is exceeded. This also applies to starts when the motor is hot or cold. Please note that using this setting requires that the Machine thermal overload protection (TM>) function is activated and in use.
Safe stall time cold	0.1…600.0s	0.1s	20.0s	The safe stall time when the motor is cold. Unless this value is specified, it is set to be equal to the hot stall time. Most probably this leads to overprotection with the cold motor stall (best case scenario). This setting value is used for the cold thermal stall curve selection in automatic control. This parameter is also used in the motor start-up and the number of starts calculations.
Safe stall time hot	0.1…600.0s	0.1s	15.0s	The safe stall time when the motor is hot. This setting value is used for the hot thermal stall curve selection in automatic control. This parameter is also used in the motor start-up and the number of starts calculations.

Table. 4.4.27 - 228. Motor's thermal image settings.

Name	Range	Step	Default	Description
Pick-up current	0.00…40.00xI_n	0.01xI_n	1.00xI_n	The current for 100 % thermal capacity to be used (the pick-up current in p.u., this current t_{max} achieved in t x 5).
NPS-biasing in use	• No NPS-biasing • NPS-biasing in use	-	No NPS-biasing in use	The selection of whether or not the thermal replica reference current is biased with the NPS current.
Thermal operation mode	• Original • Wizard model	-	Original	The selection of the thermal operation model. For more information about the "Wizard model" option, please read our white paper on using the Thermal Wizard (available on our website: "Documents & Software" → AQ 200 → Application notes and white papers).
NPS-bias factor	0.1…10.0	0.1	3.0	The negative sequence current biasing factor. This factor depends on the motor's construction and is in relation to the positive and negative sequence rotor resistances. A typical value for this is the default setting 3.0.
Time constants	• Single • Multiple	-	Single	The selection of whether the thermal replica uses single or multiple heating and cooling time constants. If "Single" is selected, only the time constants Long heating (cold) and Long cool Stop are shown. If "Multiple" is selected, all available time constants are shown.
Estimate short TC and timings	• Set manually • Estimate (online)	-	Set manually	The selection of whether the function estimates short time constants for heating and cooling. It also selects the timing for short and long time constants when the motor is stopped.
Long heat T const (cold)	0…500.0min	1.0min	10.0min	The setting for the long heating time constant. This setting is for "Cold" motor conditions and is used when the calculated thermal capacity is below the set value for "Hot condition theta limit".
Long heat T const (hot)	0…500.0min	1.0min	10.0min	The setting for the long heating time constant. This setting is for "Hot" motor conditions and is used when the calculated thermal capacity is above the set value for "Hot condition theta limit". This setting can be modified for when the motor's thermal characteristics vary between "hot" and "cold" situation. If the characteristics do not change, this setting should be the same as the setting value of "Long heat T const (cold)". This setting is visible when the time constant option "Multiple" is selected.
Long cool T const Run	0…3000.0min	1.0min	10.0min	The setting for the long cooling time constant for the "Run" condition of the motor. When the motor cools while running, its time constant is not the same as the stopped cooling constant but instead typically a lot shorter (since the motor cooling fan is active). This setting may need the testing of the motor cooling characteristics. If unknown, this setting should be the same as the setting value of "Long Cool T const Stop" (slower cooling) or "Long heat T const" (faster cooling). This setting is visible when the time constant option "Multiple" is selected.

© Arcteq Relays Ltd
IM00021

Name	Range	Step	Default	Description
Long cool T const Stop	0…3000.0min	1.0min	10.0min	The setting for the stopped motor cooling time constant. When the motor is stopped, the thermal replica calculates the cooling according to this setting value. Typically this time constant is about 2.5 – 3.5 times the heating time constant.
Short heat T const (cold)	0…500.0min	1.0min	10.0min	The setting for short heating time constant for "cold" motor status. This time constant defines the locked rotor and stalled tripping curve selection. While this setting is not the safe stall time directly, it defines the used tripping curve for the locked rotor condition. This setting is visible when the time constants option "Multiple" and the "Set manually" option from "Estimate short TC and timings" are both selected.
Short heat T const (cold) est	0…500.0min	1.0min	10.0min	The estimated setting for short heating time constant for "cold" motor status. This time constant defines the locked rotor and stalled tripping curve selection. This setting value is calculated based on the information given by the locked rotor current (LRC) and the cold safe stall time. This setting value is visible when the time constants option "Multiple" and the "Estimate" option from "Estimate short TC and timings" are both selected.
Short heat T const (hot)	0…500.0min	1.0min	10.0min	The setting for short heating time constant for "hot" motor status. This time constant defines the locked rotor and stalled tripping curve selection. While this setting is not the safe stall time directly, it defines the used tripping curve for the locked rotor condition. This setting is visible when the time constants option "Multiple" and the "Set manually" option from "Estimate short TC and timings" are both selected.
Short heat T const (hot) est	0…500.0min	1.0min	10.0min	The estimated setting for short heating time constant for "hot" motor status. This time constant defines the locked rotor and stalled tripping curve selection. This setting value is calculated based on the information given by the LRC and the hot safe stall time. This setting value is visible when the time constants option "Multiple" and the "Estimate" option from "Estimate short TC and timings" are both selected.
Short cool T const	0…3000.0min	1.0min	10.0min	The setting for the short cooling time constant. This value is the same for both running and stopped conditions, and typically it is the same between heating and cooling. This setting is visible when the time constants option "Multiple" and the "Set manually" option from "Estimate short TC and timings" are both selected.
Wf factor for L/S T const	0.0…1.0	0.1	0.5	The correction factor between the currently used long and short time constants. With this setting the heating and cooling calculations can be fine-tuned. A setting value of 0.5 means that 50 % of the heating or cooling calculation is based on the long time constant and another 50 % is based on the short time constant. A setting value of 1.0 means the calculation is completely based on the short time constant, while a value of 0.0 means it its completely based on the long time constant. This setting value is visible when the time constants option "Multiple" is selected.

Name	Range	Step	Default	Description
T const dyn. balancing	• Fixed • Dynamic	-	Fixed	The selection of whether or not the thermal replica balances and switches the time constants dynamically based on the detected motor status. The switching is based on the settings given for maximum overload current and for minimum locked rotor current. If "Dynamic" is selected, the thermal replica switches the time constants. If "Fixed" is selected, no time constants are switched. This setting value is visible when the time constants option "Multiple" is selected.
Short cool T used when stop	0.0...3000min	0.1min	30.0min	The setting for how long the short cooling time constant is used when the motor is stopped. The cooling is typically faster in right after the motor has stopped. This setting may need adjusting depending on the application for a perfect match. This setting value is visible when the time constansts option "Multiple" is selected.
Short cool T used when stop (est)	0.0...3000min	0.1min	30.0min	The estimated setting for how long the short cooling time constant is used when the motor is stopped. The cooling is typically faster right after the motor has stopped. This setting value is visible when the time constansts option "Multiple" is selected.
Cold reset default theta	0.0…150.0%	0.1%	60.0%	The default theta when the function is restarted. It is also possible to fully reset the thermal element. This parameter can be used when testing the function to manually set the current thermal cap to any value.

ADD A VALUE IN THE STYLE SHEET FOR THIS LANGUAGE
Please refer to our white paper on using the thermal wizard
https://www.arcteq.com/wp-content/uploads/2021/10/MM00008_White-paper_Using-the-Engine-Thermal-Wizard-for-Accurate-Setting-and-Commissioning-of-Motor-Protection-Relays.pdf

Table. 4.4.27 - 229. Environmental settings

Name	Range	Step	Default	Description
Dev. temp (tmax)	• A • B • F • H • Manual set	-	F	The maximum allowed temperature for the protected object. The default setting is "F" which is +155 °C.
Obj. max. temp (tmax = 100 %)	0…500 deg	1 deg	125 deg	Visible when the Dev. temp. (tmax) is set to "4: Manual set".
Ambient temp. sel.	• Manual set • RTD	-	Manual set	The selection of whether the thermal image biasing uses a fixed or a measured ambient temperature.
Man. amb. temp. set.	0…500 deg	1 deg	40 deg	The manual fixed ambient temperature setting for thermal image biasing. Underground cables commonly use +15 °C. This setting is visible if "Ambient temp. sel." is set to "Manual set".

© Arcteq Relays Ltd
IM00021

Name	Range	Step	Default	Description
RTD amb. temp. read.	0…500 deg	1 deg	40 deg	The RTD ambient temperature reading for the thermal image biasing. This setting is visible if "Ambient temp. sel." is set to "RTD".
Ambient lin. or curve	• Linear est. • Set curve	-	Linear est	The selection of how to correct the ambient temperature, either by internally calculated compensation based on end temperatures or by a user-settable curve. The default setting is "Linear est." which means the internally calculated correction for ambient temperature.
Temp. reference (tref) k_{amb} = 1.0	-60…500 deg	1 deg	15 deg	The temperature reference setting. The manufacturer's temperature presumptions apply and the thermal correction factor is 1.00 (rated temperature). For underground cables the set value for this is usually 15 ˚C and for cables in the air it is usually 25 ˚C. This setting is visible if "Ambient lin. or curve" is set to "Linear est."
Max. ambient temp.	0…500 deg	1 deg	45 deg	The maximum ambient temperature setting. If the measured temperature is more than the maximum set temperature, the set correction factor for the maximum temperature is used. This setting is visible if "Ambient lin. or curve" is set to "Linear est."
k at max. amb. temp.	0.01…5.00 x I_n	0.01 x I_n	1.00 x I_n	The temperature correction factor for the maximum ambient temperature setting. This setting is visible if "Ambient lin. or curve" is set to "Linear est."
Min. ambient temp.	-60…500 deg	1 deg	0 deg	The minimum ambient temperature setting. If the measured temperature is below the minimum set temperature, the set correction factor for minimum temperature is used. This setting is visible if "Ambient lin. or curve" is set to "Linear est."
k at min. amb. temp.	0.01…5.00 x I_n	0.01 x I_n	1.00 x I_n	The temperature correction factor for the minimum ambient temperature setting. This setting is visible if "Ambient lin. or curve" is set to "Linear est."
Amb. temp. ref. 1...10	-50.0…500.0 deg	0.1 deg	15 deg	The temperature reference points for the user-settable ambient temperature coefficient curve. This setting is visible if "Ambient lin. or curve" is set to "Set curve".
Amb. temp. k1...k10	0.01…5.00	1.00	0.01	The coefficient value for the temperature reference point. The coefficient and temperature reference points must be set as pairs. This setting is visible if "Ambient lin. or curve" is set to "Set curve".
Add curvepoint 3…10	• Not used • Used	-	Not used	The selection of whether or not the curve temperature/coefficient pair is in use. The minimum number to be set for the temperature/ coefficient curve is two pairs and the maximum is ten pairs. If the measured temperature is below the set minimum temperature reference or above the maximum set temperature reference, the used temperature coefficient is the first or last value in the set curve. This setting is visible if "Ambient lin. or curve" is set to "Set curve".

Operating characteristics

The operating characteristics of the machine thermal overload protection function are completely controlled by the thermal image. The thermal capacity value calculated from the thermal image can set the I/O controls with ALARM 1, ALARM 2, INHIBIT and TRIP signals.

Table. 4.4.27 - 230. Pick-up settings.

Name	Range	Step	Default	Description
Enable TM> Alarm 1	• Disabled • Enabled	-	Disabled	Enabling/disabling the ALARM 1 signal.
TM> Alarm 1 level	0.0…150.0 %	0.1 %	40 %	ALARM 1 activation threshold.
Enable TM> Alarm 2	• Disabled • Enabled	-	Disabled	Enabling/disabling the ALARM 2 signal.
TM> Alarm 2 level	0.0…150.0 %	0.1 %	40 %	ALARM 2 activation threshold.
Enable TM> Trip	• Disabled • Enabled	-	Enabled	Enabling/disabling the Trip signal.
Enable TM> Rest Inhibit	• Disabled • Enabled	-	Disabled	Enabling/disabling the INHIBIT signal.
TM> Inhibit level	0.0…150.0 %	0.1 %	80 %	INHIBIT activation threshold.
TM> Trip level	0.0…150.0 %	0.1 %	100 %	TRIP activation threshold. This parameter is only visible when "Enable TM> Trip" is Enabled.
TM> Trip delay	0.000…3600.000 s	0.005 s	0.000 s	The trip signal's additional delay. This delay delays the trip signal generation by a set time. The default setting is 0.000 s which does not give an added time delay for the trip signal. This parameter is only visible when "Enable TM> Trip" is Enabled.

Function blocking

The blocking signal is evaluated at the start of each program cycle. The blocking signals are connected to the function's dedicated input, which can be configured in the *IO → Blocking Input Control* tab of the function.

- When the pick-up element activates and the blocking signal is not active, a START signal is generated and the function starts or continues the trip-time countdown.
- When the pick-up element activates and the blocking input signal is active, a BLOCKED signal is generated, and the function does not process the event further.
- When START signal is already active and the blocking input signal becomes active, the START signal is reset and BLOCKED signal is generated. The release-time characteristics are processed as if the fault condition had been cleared.

The blocking signal needs to reach the device minimum of 5 ms before the set operating delay has passed in order for the blocking to activate in time.

© Arcteq Relays Ltd
IM00021

Measurements and indications

The function outputs measured process data from the following magnitudes:

Table. 4.4.27 - 231. General status codes.

Name	Range	Description
TM> LN behaviour	• On • Blocked • Test • Test/ Blocked • Off	Displays the mode of TOLM block. This parameter is visible only when *Allow setting of individual LN mode* is enabled in *General* menu.
TM> Condition	• Normal • Alarm 1 ON • Alarm 2 ON • Inhibit ON • Trip ON • Blocked	The function's operating condition. No outputs are controlled when the status is "Normal".
Motor status	• Stopped • Stalled • Just Stopped • Overloading • Running normal	The function's thermal image status. When the measured current is below 1 % of the nominal current, the status "Light/No load" is shown. When the measured current is below the trip limit, the status "Load normal" is shown. When the measured current is above the pick-up limit but below 2 x I_n , the status "Overloading" is shown. When the measured current is above 2 x I_n, the status "High overload" is shown.
TM> Setting alarm	• SF setting ok • Service factor set fault. Override to 1.0	Indicates if SF setting has been set wrong and the actually used setting is 1.0. Visible only when there is a setting fault.
TM> Setting alarm	• Ambient setting ok • Ambient t set fault. Override to 1.0	Indicates if ambient temperature settings have been set wrong and actually used setting is 1.0. Visible only when there is a setting fault.
TM> Setting alarm	• Nominal current calc ok • Nominal current set fault. Override to 1.0	Indicates if nominal current calculation is set wrong and actually used setting is 1.0. Visible only when there is a setting fault.
TM> Setting alarm	• Ambient setting ok • Inconsistent setting of ambient k	Indicates if ambient k setting has been set wrong. Visible only when there is a setting fault.

Table. 4.4.27 - 232. Measurements.

Name	Range	Description / values
Currents	• Primary A • Secondary A • Per unit	The active phase current measurement from IL1 (A), IL2 (B) and IL3 (C) phases in given scalings.
Thermal image	Thermal image calc.	- TM> Trip expect mode: No trip expected/Trip expected - TM> Time to 100 % theta: Time to reach the 100 % thermal cap - TM> Rreference T curr.: reference/pick-up value (IEQ) - TM> Active meas. curr.: the measured maximum TRMS current at a given moment - TM> T est. with act. curr.: estimation of the used thermal capacity including the current at a given moment - TM> T at a given moment: the thermal capacity used at that moment
	Temp. estimates	- TM> Used k for amb. temp: the ambient correction factor at a givenmoment - TM> Max. temp. rise all.: the maximum allowed temperature rise - TM> Temp. rise atm: the calculated temperature rise at a given moment - TM> Hot spot estimate: the estimated hot spot temperature including the ambient temperature - TM> Hot spot max. all.: the maximum allowed temperature for the object
	Timing status	- TM> Trip delay remaining: the time to reach 100% theta - TM> Trip time to rel.: the time to reach theta while staying below the trip limit during cooling - TM> Alarm 1 time to rel.: the time to reach theta while staying below the Alarm 1 limit during cooling - TM> Alarm 2 time to rel.: the time to reach theta while staying below the Alarm 2 limit during cooling - TM> Inhibit time to rel.: the time to reach theta while staying below the Inhibit limit during cooling

Table. 4.4.27 - 233. Counters.

Name	Description / values
Alarm1 inits	The number of times the function has activated the Alarm 1 output
Alarm2 inits	The number of times the function has activated the Alarm 2 output
Restart inhibits	The number of times the function has activated the Restart inhibit output
Trips	The number of times the function has tripped
Trips Blocked	The number of times the function trips has been blocked

Events and registers

The machine thermal overload protection function (abbreviated "TOLM" in event block names) generates events and registers from the status changes in the events listed below. The user can select which event messages are stored in the main event buffer: ON, OFF, or both. The events triggered by the function are recorded with a time stamp.

The function's output signals can be used for direct I/O controlling and user logic programming. The function also provides a resettable cumulative counter for the TRIP, ALARM 1, ALARM 2, INHIBIT and BLOCKED events.

© Arcteq Relays Ltd
IM00021

Table. 4.4.27 - 234. Event messages.

Event block name	Description
TOLM1	Alarm1 ON/OFF
TOLM1	Alarm2 ON/OFF
TOLM1	Inhibit ON/OFF
TOLM1	Trip ON/OFF
TOLM1	Block ON/OFF

The function registers its operation into the last twelve (12) time-stamped registers. The register of the function records the ON event process data for TRIP, BLOCKED, etc. signals. The table below presents the structure of the function's register content.

Table. 4.4.27 - 235. Register content.

Name	Event names
Date and time	dd.mm.yyyy hh:mm:ss.mss
Event	Event name
Time to reach 100 % theta	seconds
Ref. T current	x I_n
Active meas. current	x I_n
T at a given moment	%
Max. temp. rise allowed	degrees
Temp. rise at a given moment	degrees
Hot spot estimate	degrees
Hot spot max. all.	degrees
Trip delay rem.	Remaining time to trip in seconds
Setting group in use	Setting group 1...8 active

4.4.28 Motor start/ locked rotor monitoring (Ist>; 48/14)

The motor start/locked rotor monitoring function is used for monitoring the start-up's duration as well as the start-up's stress on the motor. The function can also be used after starting locked rotor protection.

The operating principle of the function is either definite maximum locked rotor time monitoring, or inverse operating time based on the allowed I^2t calculation. When using the I^2t-calculated starting time, the maximum allowed starting time is automatically scaled according to the motor's current. For example, when the network voltage is lower and thus the starting current is also lower, the calculation gives the motor a longer starting time knowing these conditions prolong any start-up. The maximum allowed starting time can be set manually, or the function can be commanded to automatically follow the prescribed hot and cold safe stalling times of the motor manufacturer. Please note that this requires the following: the machine thermal overload protection function must be activated, it must pick-up the automatic safe stalling times, and the thermal status of the motor must be communicated to the Ist> function. The user can set both the allowed starting time and the speed switch input. The speed switch may be required by some high-mass applications when the start-up may last longer; the user should check and ensure that the motor is actually accelerating instead of standing still with its rotor locked.

Figure. 4.4.28 - 155. Simplified function block diagram of the motor start/ locked rotor monitoring function.

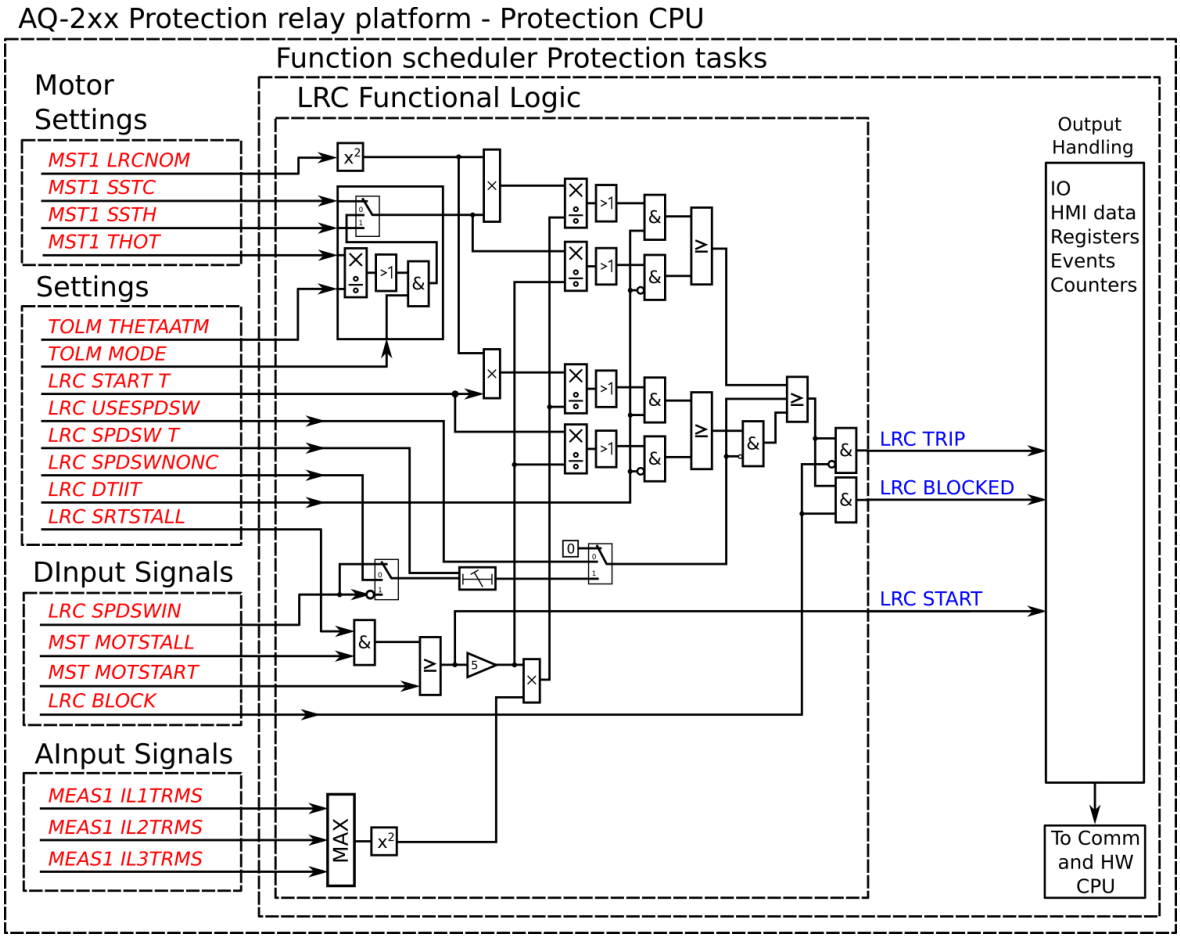

A recommended setup for this function is for the I^2t mode to be used in starting; if motor running/ locked rotor situations at times occur in some parts of the duty cycle during normal use, the locked rotor protection must also be applied. The following five figures present a number of suggested applications for the Ist> function for various situations. It is advised that the speed switch –if available– is also used for the motor start monitoring, especially when the motor has a high load when starting, thus making the start-up take very long.

© Arcteq Relays Ltd
IM00021

Figure. 4.4.28 - 156. Outputs in normal motor start, no speed switch.

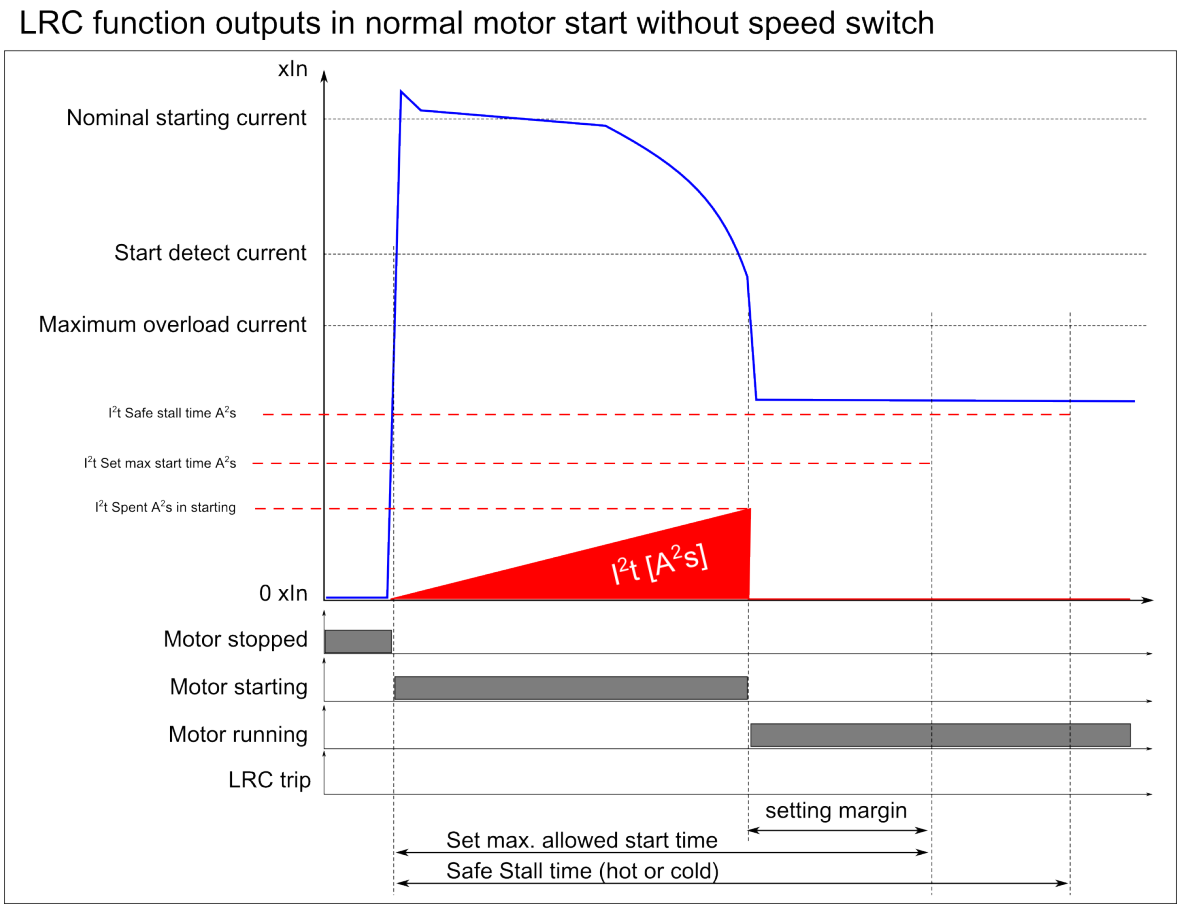

The Ist> function should be set so that it takes into account the application's required starting time for a normal motor start. The setting of the function should include a setting margin for the expected starting time. If the starting of the motor is dependent on the process status (e.g. the motor's drive may have a full load or have no load when started), the setting should afford it the longest possible starting time as the status may affect the motor's starting time. If the start-up situation is supposed to always be the same, a sufficient setting for the function's starting monitor would be the expected starting time with an additional 10 % margin. During start-up the function monitors the accumulated I^2t value and when it drops below the calculated I^2t value, the function allows the starting process continue.

If the starting of the motor takes longer than the function's set value, the function trips the breaker and halts the starting process; if the motor cannot start normally there is something wrong with the application.

Figure. 4.4.28 - 157. Outputs when motor starting takes too long, no speed switch.

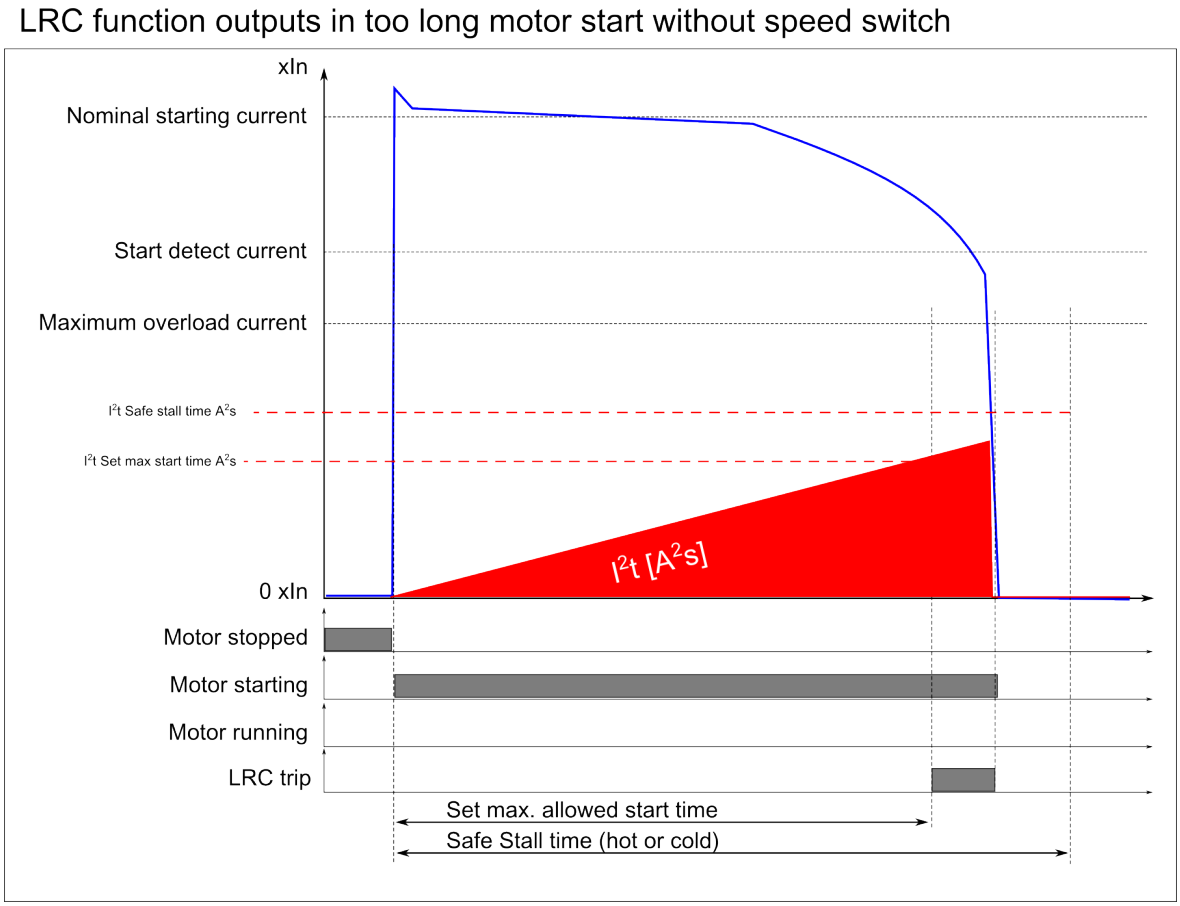

There are many reasons why the motor starting takes too long. These include problems in the drive or in the application. There may also be an issue with the feeding network: if the started motor is very large and the feeding network is weak, its voltage may drop and therefore the motor cannot provide the needed torque for normal starting, resulting in a prolonged start-up situation. This is why the I^2t mode is suggested as it can compensate for the voltage drop by taking the lower starting current caused by the lower voltage into account. If definite time is preferred for the Ist> function, it may cause a situation where the starting is well in action but the user-allowed time is spent due to the lower current and lower torque caused by the network's low voltage. In this case the function may trip before the starting is over eventhough the motor is not yet stressed too much and could still continue the starting.

A speed switch –if available in the application– activates when the motor shaft rotates or accelerates, and it can be used to give the motor additional time for starting beyond the set maximum starting duration. If the speed switch is in use while a similar situation happens (that is, that the motor starting is taking longer than it should), the speed switch ensures that the start-up of the motor is still going fine and the function lets the starting process continue.

© Arcteq Relays Ltd
IM00021

Figure. 4.4.28 - 158. Outputs in long motor starting, with a speed switch.

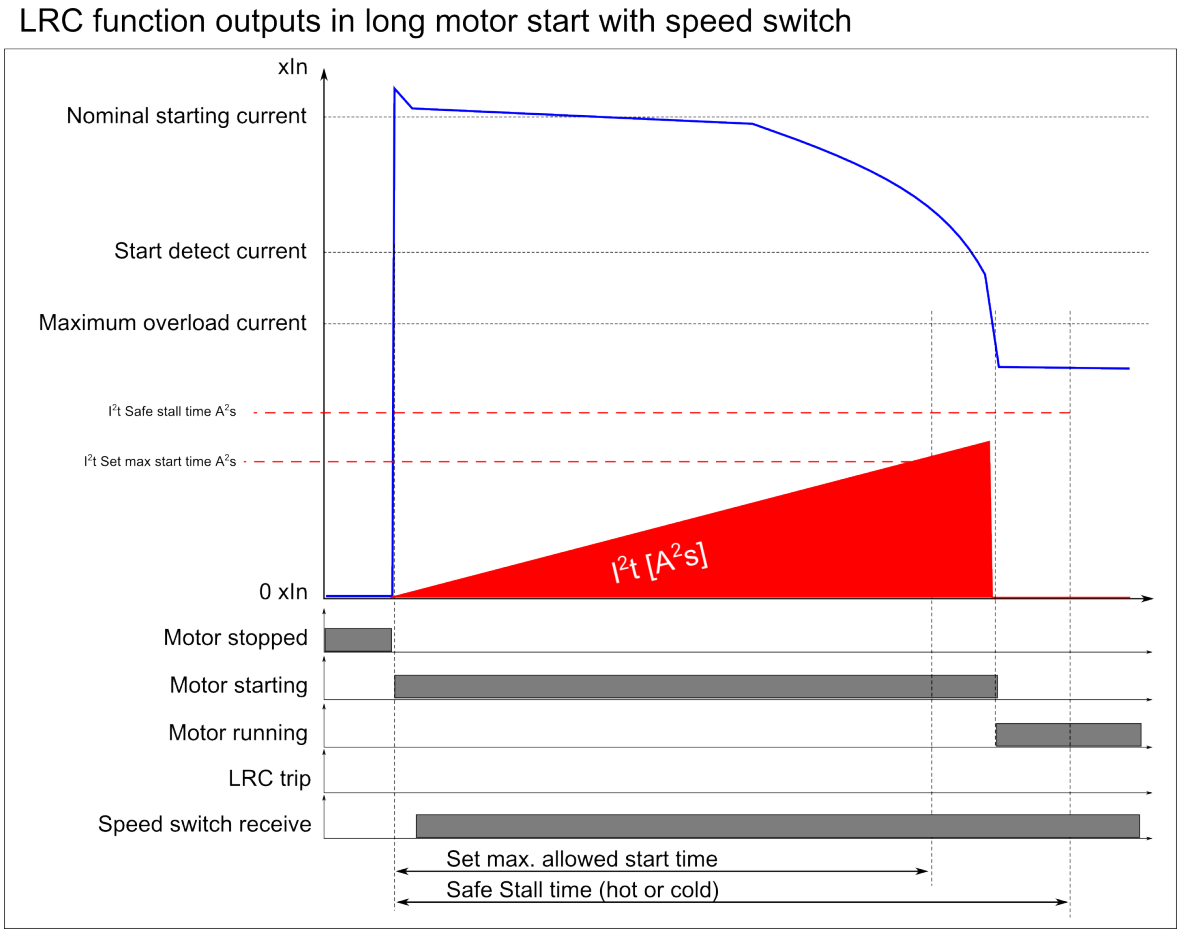

The speed switch is also useful when the motor start is naturally very long due to a high accelerating mass. In such applications a speed switch is required to know whether the start-up is actually happening, or whether the load is jammed and the motor is standing still with its rotor locked.

If the motor start-up with a speed switch exceeds the allowed safe stall time of the motor specifications, the function trips.

Figure. 4.4.28 - 159. Outputs when motor starting takes too long, with a speed switch.

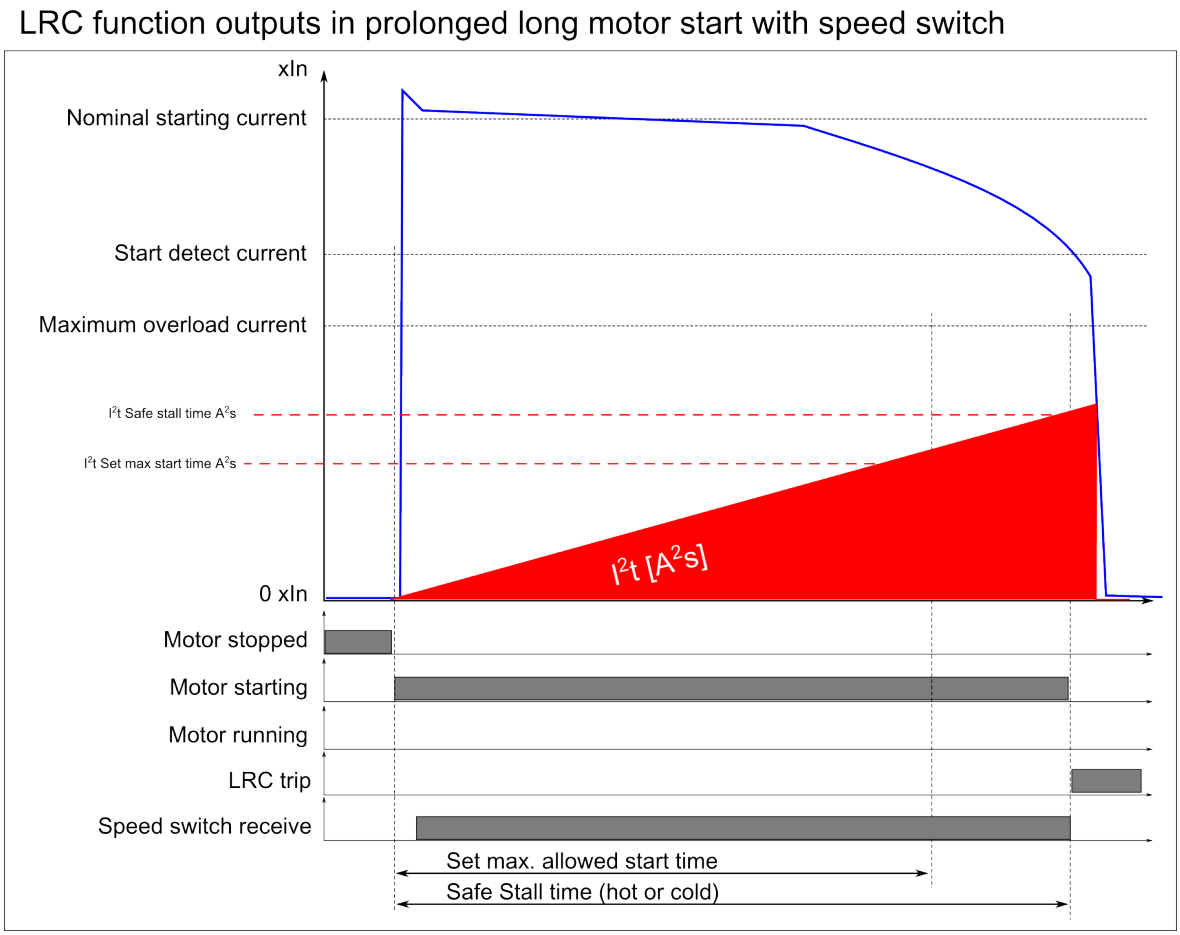

If the starting condition lasts longer than the safe stall time that has been set, the function trips the breaker. In this case the motor is either too small to accelerate within the give time frame or there is a problem with the load eventhough the motor is able to rotate. Letting the starting progress would endanger the motor.

The function can be set to monitor the situation if the motor stalls after it has started. There are the signals ("Mechanical jam" and "Motor stalled") available In the motor protection module, and both can be used to direct the tripping of the motor.

When the Ist> function is in stall detection and monitor mode, it uses the same default settings for the motor stall than for the starting conditions. The function monitors either given definite time, or the I^2t value and the speed switch input. If given time is exceeded during the stall time the function initiates tripping of the motor from the stall condition.

© Arcteq Relays Ltd
IM00021

Figure. 4.4.28 - 160. Motor stall monitoring.

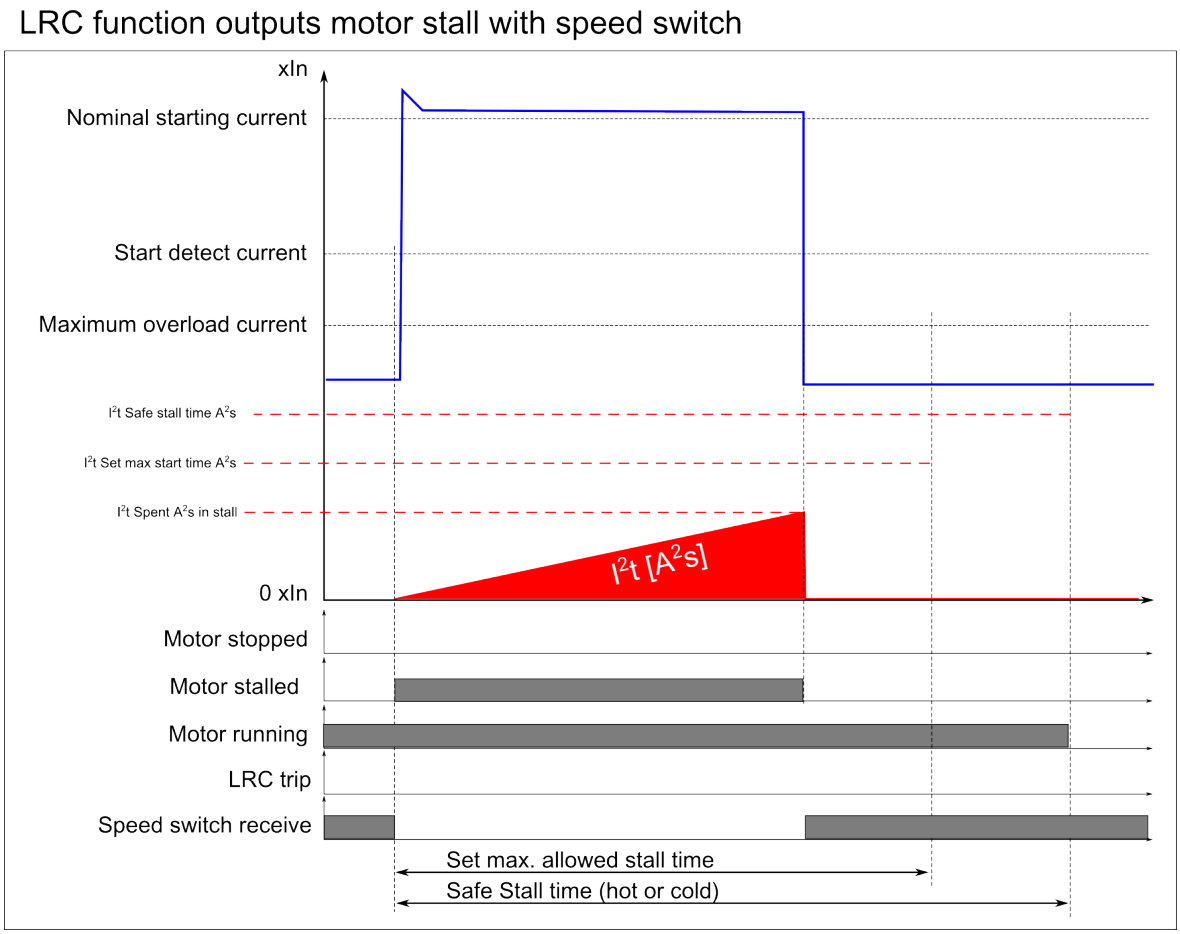

Settings and signals

The settings of the motor start/locked rotor monitoring function are mostly shared with other motor protection functions in the device's motor module. The following table shows the motor data settings of the Ist> function.

Table. 4.4.28 - 236. Basic settings of the motor start/locked rotor monitoring function

Name	Range	Step	Default	Description
ISt> force status to	• Normal • Start • Set time Trip • M cap Trip • Blocked	-	Normal	Force the status of the function. Visible only when *Enable stage forcing* parameter is enabled in *General* menu.
ISt> LN mode	• On • Blocked • Test • Test/ Blocked • Off	-	On	Set mode of LCR block. This parameter is visible only when *Allow setting of individual LN mode* is enabled in *General* menu.

Name	Range	Step	Default	Description
ISt> LN behaviour	• On • Blocked • Test • Test/ Blocked • Off	-	-	Displays the mode of LCR block. This parameter is visible only when *Allow setting of individual LN mode* is enabled in *General* menu.
Motor Start	• DOL • Y-delta • Soft start	-	DOL	The motor starting mode selection. The user can select between direct-on-line (DOL), Star-Delta and Soft start in future releases.
Motor In Scaled	0.1...40.0xI_n	0.1xI_n	-	The motor's nominal current scaled to per unit. If the user selects *Object In* in the CT settings, this value should be 1.00. If scaled to the CT nominal, this value may vary.
Motor In A	0.1...5000A	0.1A	-	The motor's nominal current in amperes.
Nominal starting current	0.1…40.0xI_n	0.1xI_n	6.0xI_n	The motor's locked rotor current with the nominal voltage. This setting is used for automatic curve selection and calculation. Also, the nominal starting capacity calculation is based on this value.
Nominal starting current A	0.1...5000A	0.1A	-	The motor's locked rotor current in amperes.
Start detect current	0.1…40.0xI_n	0.1xI_n	1.5xI_n	The motor starting current detection limit. When in DOL or Star-Delta mode, this setting defines the motor starting moment when the measured current exceeds both the no-load current limit and the start detect current limit within a ten-millisecond period. If the current increases slower, it is not defined as a motor start.
Start detect current A	0.1...5000A	0.1A	-	The motor's starting current detection limit in amperes.
Min locked rotor current	0.1…40.0xI_n	0.1xI_n	3.5xI_n	The motor's minimum locked rotor current. This setting defines the current limit for when this current is exceeded while the automatic curve selection and the control only short time constant (stall) are in use.
Min locked rotor current A	0.1...5000A	0.1A	-	The motor's minimum locked rotor current. This setting defines the current limit for when this current is exceeded while the automatic curve selection and the control only short time constant (stall) are in use.
Max locked rotor current	0.1…40.0xI_n	0.1xI_n	7.5xI_n	Maximum locked rotor current of the motor. This setting defines the current limit which is maximum current for the motor to draw in locked rotor situation (starting or stalled). If the measured current exceeds this setting limit it is considered to be overcurrent fault and corresponding measures can be applied to disconnect the feeder and motor from the supply.
Max locked rotor current A	0.1...5000A	0.1A	-	The maximum locked rotor current in amperes.

© Arcteq Relays Ltd
IM00021

Name	Range	Step	Default	Description
Max overload current	0.1…40.0xI_n	0.1xI_n	2.0xI_n	The motor's maximum overload current. Exceeding this setting stalls the motor. This setting defines when the thermal replica switches to the short (stall) time constant. As long as the current stays below this setting value, the motor should run even when overloaded.
Max overload current A	0.1...5000A	0.1A	-	The motor's maximum overload current in amperes.
Hot condition theta limit	0.0…100.0%	0.1%	70%	Setting the motor's thermal limit for hot and cold situations. When this setting value is not exceed while a locked rotor situation occurs, the function uses a cold stall curve adjusted with the actually used thermal capacity. The function uses a hot stall curve when this setting value is exceeded. This hot/cold selection also applies to starts. Please note that using this setting requires that the Machine thermal overload protection (Tm>) function is activated and in use.
Safe stall time cold	0.1…600.0s	0.1s	20.0s	The safe stall time when the motor is cold. Unless this value is specified, it is set to be equal to the hot stall time. Most probably this leads to overprotection with the cold motor stall (best case scenario). This setting value is used for the cold thermal stall curve selection in automatic control. This parameter is also used in the motor start-up and the number of starts calculations.
Safe stall time hot	0.1…600.0s	0.1s	15.0s	The safe stall time when the motor is hot. This setting value is used for the hot thermal stall curve selection in automatic control. This parameter is also used in the motor start-up and the number of starts calculations.

Table. 4.4.28 - 237. Settings of the Ist> function.

Name	Range	Step	Default	Description
Starting time	0.000…1800.000s	0.005s	0.040s	Motor starting time the user sets. This setting should include the expected normal starting time of the protected motor as well as the operating marginal.
Definite time or I^2t	• Definite • I^2t mode	-	Definite	Selection of the operating mode. If the I^2t mode is selected, the function monitors the heating effect as a function of the measured current. In the Definite time mode, the function only monitors the start/stall signal duration and compares it to the "Starting time" setting.
Speed switch in use	• No • Yes	-	No	Selection of whether or not the speed switch is used in the application.
Speed SW wait time	0.000…1800.000s	0.005s	0.040s	The setting which determines how long the function waits for the speed switch to give a signal since the starting of the motor. If the speed switch is not activated during this set time, the starting of the motor is halted. This setting is visible only if the "Speed switch in use" setting is active.
Speed SW NO/ NC	• NO • NC	-	NO	The polarity of the speed switch signal, normally open ("NO") or normally closed ("NC"). This setting is visible only if the "Speed switch in use" setting is active.

Name	Range	Step	Default	Description
Operating mode	• Starts only • Starts and stall	-	Starts only	Operating mode selection of the function. This setting defines whether the function monitors only the start-up conditions of the motor, or both the start-up and stall conditions of the motor.

Table. 4.4.28 - 238. Output signals of the Ist> function.

Name	Description
Ist> START	The START output of the function. This signal activates when the starting conditions are met and the function is about to initiate a trip after the time calculation is finished.
Ist> Set time TRIP	Activates when motor starting time exceeds the "Starting time" set in the ISt> function.
ISt> Machine cap.TRIP	Activates when starting/stalling time exceeds hot/cold Safe stall time (set in machine thermal overload protection function).
Ist> BLOCKED	The BLOCKED output of the function. This signal activates when the START output is activated but the function is blocked from operating normally.

Function blocking

The blocking signal is evaluated at the start of each program cycle. The blocking signals are connected to the function's dedicated input, which can be configured in the *IO → Blocking Input Control* tab of the function.

- When the pick-up element activates and the blocking signal is not active, a START signal is generated and the function starts or continues the trip-time countdown.
- When the pick-up element activates and the blocking input signal is active, a BLOCKED signal is generated, and the function does not process the event further.
- When START signal is already active and the blocking input signal becomes active, the START signal is reset and BLOCKED signal is generated. The release-time characteristics are processed as if the fault condition had been cleared.

The blocking signal needs to reach the device minimum of 5 ms before the set operating delay has passed in order for the blocking to activate in time.

Events and registers

The motor start/locked rotor monitoring function (abbreviated "LCR" in event block names) generates events and registers from the status changes in the events listed below. The user can select which event messages are stored in the main event buffer: ON, OFF, or both. The events triggered by the function are recorded with a time stamp.

The function's output can be used for direct I/O controlling and user logic programming.

Table. 4.4.28 - 239. Event messages.

Event block name	Event names
LCR1	Max. Start time exceed ON/OFF
LCR1	Set start time exceed ON/OFF

© Arcteq Relays Ltd
IM00021

Event block name	Event names
LCR1	Speed Switch not received ON/OFF
LCR1	Start ON/OFF
LCR1	Set time Trip ON/OFF
LCR1	Max cap Trip ON/OFF
LCR1	Blocked ON/OFF

The function registers its operation into the last twelve (12) time-stamped registers. The table below presents the structure of the function's register content.

Table. 4.4.28 - 240. Register content.

Register	Description
Date and time	dd.mm.yyyy hh:mm:ss.mss
Event	Event name
Start/Stall time	Recorded duration of stall/start
Set time used	Percentage used from user set max time
Thermal cap. used	Thermal capacity used
L1 current	Phase L1 current x I_n
L2 current	Phase L2 current x I_n
L3 current	Phase L3 current x I_n
Setting group in use	Used setting group

4.4.29 Frequent start protection (N>; 66)

The frequent start protection function is used for monitoring and preventing the starting of the motor to happen too frequently. This function monitors the number of the starts the motor has used within a given time frame to ensure that the start stress does not exceed the limits stated by the manufacturer. The start-up situation is most stressful normal operation situation for motors that are started with Direct On Line; the manufacturer gives safe start limits with a specified time frame for both cold and hot motors in order to guarantee the motor's lifetime. Usually the manufacturers also specify the time between consequent starts. When a set number of starts have been used or a new start or start attempt is made too quickly after the previous start or start attempt, further starting attempts should be blocked by using the N> function, thus allowing the motor to cool down sufficiently before the next start attempt.

The frequent start protection function in a motor protection module operates with the motor status monitoring function and follows the motor data set there. Motor starting is monitored internally (MST signal out) in the N> function. The user only needs to activate the N> function and then do the following: set the number of allowed starts for hot and cold situations, set the minimum time between consequent starts, and set the limits of "Hot" and "Cold" situations. The thermal overload function also needs to be activated and set, if the user wants to use the hot and cold motor status separation.

Figure. 4.4.29 - 161. Simplified function block diagram of the N> function.

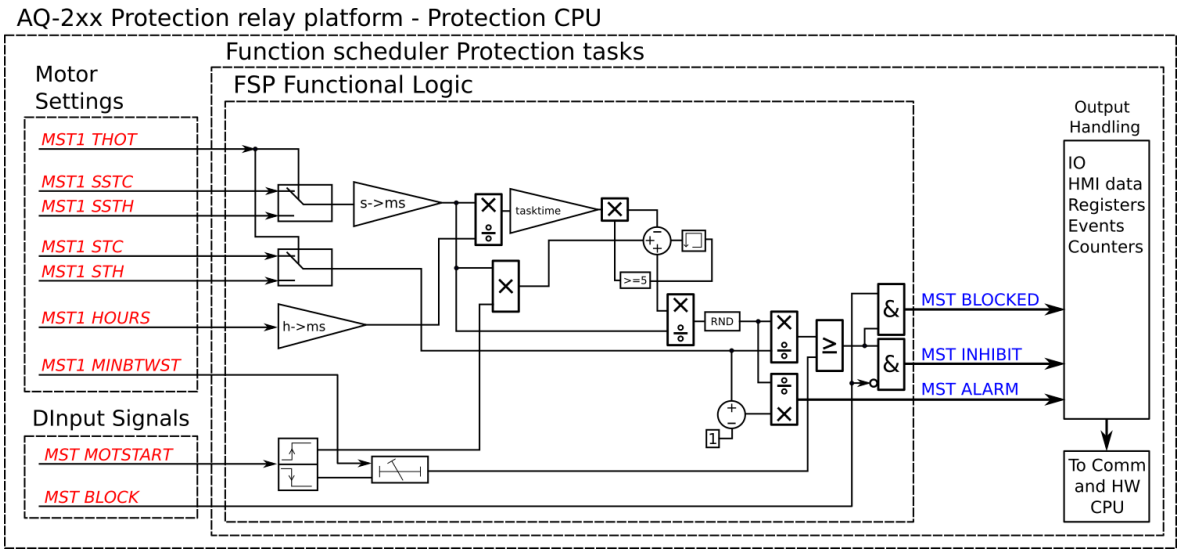

The operating principle of the frequent start protection function is to calculate an equivalent start stress in each start; the calculation is based on the set starts per hour and the safe stall time settings (hot and cold) regardless of the actual start duration. In each start attempt the function does the following calculation: a time equal to the safe stall time and is added to the starts counter, and the quotient of the safe stall time divided by the set starts time (in hours) is then subtracted from this sum. This way the start counter can be applied to follow the motor's thermal status and the number of starts per hour accurately.

Figure. 4.4.29 - 162. Updating the function's start counter (image not to scale with regard to time).

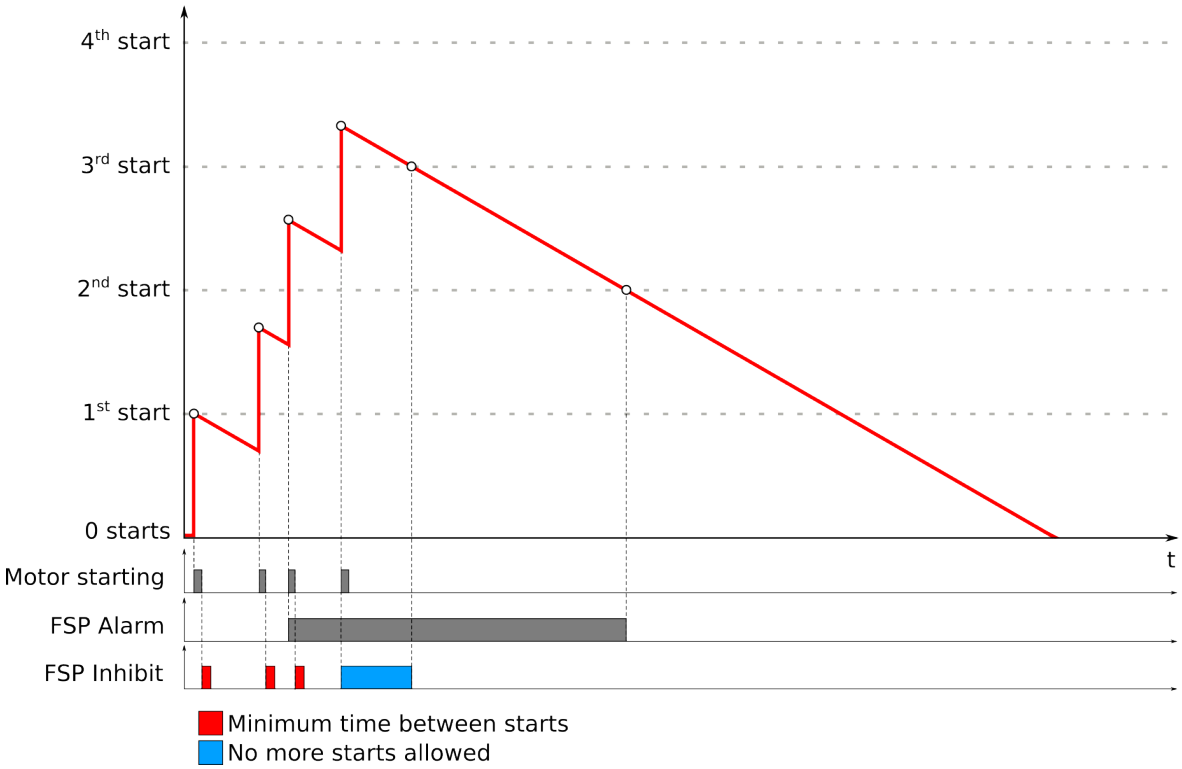

In the example above the motor is allowed four starts within a specific time frame (*t*): the motor is started four times and the counter is updated accordingly. The function's alarm activates after the third start to indicate that only one more start is allowed. Once this start is used the function's restart inhibit is activated and it stays active until the motor can be started again.

© Arcteq Relays Ltd
IM00021

The cumulative start-up counter is updated constantly in each program cycle, and the function shows the inhibit and alarm time as well as the number of used and available starts. The counter is updated in every start: the counter is increased by the product of the safe stall time multiplied by the nominal start-up current. In each start the counter is increased by this product which is then in every cycle deduct by starts/given time divided by program cycle time. This way the start-up counter can be precisely set for each motor.

Figure. 4.4.29 - 163. Updating the starts counter when thermal hot and cold status taken into consideration.

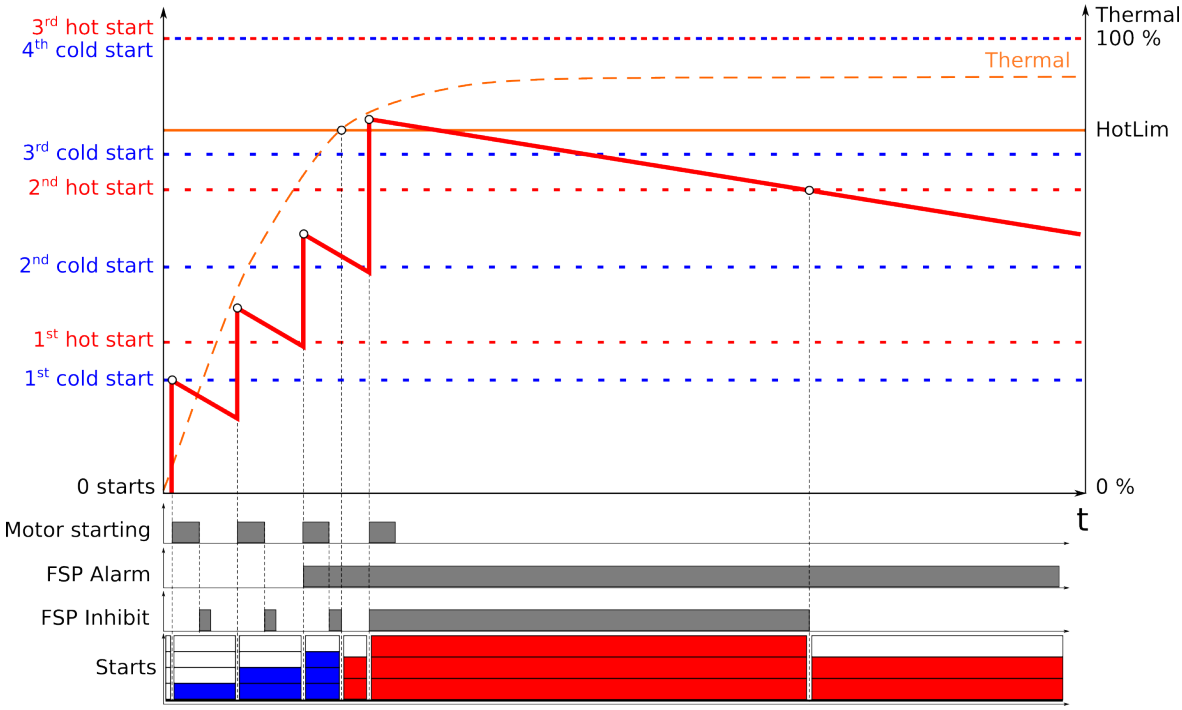

If a motor's thermal load is monitored, a correct number of starts can be allowed for the motor when the device can update the available starts online and precisely monitor the motor's status. In the example figure above, the motor is allowed four (4) starts when it is cold, and three (3) starts when it is hot. In the figure's situation the motor has been started three times cold and the hot limit is reached before the motor has started for the fourth time. Due to the three cold starts the counter only allows for one more start, as the motor has already been started three times cold. While the thermal status is "hot", the restart inhibit is activated and the start cooling time is counted according to the reduction rate for hot starts. Now, if the motor were stopped in this situation, the starts reduction would be counted according to "cold" motor status as the thermal load would reduce the count below the "hot" limit.

General settings

The following general settings define the general behavior of the function. These settings are static i.e. it is not possible to change them by editing the setting group.

Table. 4.4.29 - 241. General settings of the function.

Name	Range	Default	Description
N> LN mode	• On • Blocked • Test • Test/ Blocked • Off	On	Set mode of FSP block. This parameter is visible only when *Allow setting of individual LN mode* is enabled in *General* menu.

Read-only parameters

The function's *Info* page displays useful, real-time information on the state of the protection function. It is accessed either through the device's HMI display, or through the setting tool software when it is connected to the device and its Live Edit mode is active.

Table. 4.4.29 - 242. Information displayed by the function.

Name	Range	Description
N> LN behaviour	• On • Blocked • Test • Test/ Blocked • Off	Displays the mode of FSP block. This parameter is visible only when *Allow setting of individual LN mode* is enabled in *General* menu.
N> condition	• Normal • Start • Trip • Blocked	Displays the status of the protection function.

Settings and signals

The settings of the frequent start protection are the directly stated motor data from the device's motor module. The following table shows the other functions that also use these settings. If these settings are edited through the frequent start protection function's setting view, they change in all other mentioned functions at the same time.

Table. 4.4.29 - 243. Motor data settings.

Name	Range	Step	Default	Description
Hot condition theta limit	0.0…100.0%	0.1%	70%	Setting the motor's thermal limit in a hot or a cold situation. When this setting value is not exceed while a locked rotor situation occurs, the function uses a cold stall curve adjusted with the actually used thermal capacity. The function uses a hot stall curve when this setting value is exceeded. This setting also applies to starts when the hot/cold selection is in use. Please note that using this setting requires that the Machine thermal overload protection (Tm>) function is activated and in use.

© Arcteq Relays Ltd
IM00021

Name	Range	Step	Default	Description
Safe stall time cold	0.1…600.0s	0.1s	20.0s	The safe stall time when the motor is cold. Unless this value is specified, it is set to be equal to the hot stall time. Most probably this leads to overprotection with the cold motor stall (best case scenario). This setting value is used for the cold thermal stall curve selection in automatic control. This parameter is also used in the motor start-up and the number of starts calculations.
Safe stall time hot	0.1…600.0s	0.1s	15.0s	The safe stall time when the motor is hot. This setting value is used for the hot thermal stall curve selection in automatic control. This parameter is also used in the motor start-up and the number of starts calculations.
Starts when cold	1…100	1	3	The number of allowed starts per x hours for a cold motor.
Starts when hot	1…100	1	2	The number of allowed starts per x hours for a hot motor.
Starts in hours	1…100h	1h	1h	The number of hours when the parameters of the number of allowed starts (hot and cold) apply.
Min time betw. starts	0.1…600.0s	0.1s	20.0s	The minimum time between starts or start attempts.

Table. 4.4.29 - 244. Output signals of the N> function.

Name	Description
N> Alarm on	Alarm output of the function. This signal activates when there is one (1) start available for the motor.
N> Inhibit on	Inhibit output of the function. This signal activates when all available starts have been used and the motor is not allowed to start before the starts counter has one (1) or more starts available.
N> BLOCKED	Blocked output of the function. This signal activates when the function is activated but is blocked from operating normally.

Function blocking

The blocking signal is evaluated at the start of each program cycle. The blocking signals are connected to the function's dedicated input, which can be configured in the *IO → Blocking Input Control* tab of the function.

- When the pick-up element activates and the blocking signal is not active, a START signal is generated and the function starts or continues the trip-time countdown.
- When the pick-up element activates and the blocking input signal is active, a BLOCKED signal is generated, and the function does not process the event further.
- When START signal is already active and the blocking input signal becomes active, the START signal is reset and BLOCKED signal is generated. The release-time characteristics are processed as if the fault condition had been cleared.

The blocking signal needs to reach the device minimum of 5 ms before the set operating delay has passed in order for the blocking to activate in time.

Events and registers

The frequent start protection function (abbreviated "FSP" in event block names) generates events and registers from the status changes in the events listed below. The user can select which event messages are stored in the main event buffer: ON, OFF, or both. The events triggered by the function are recorded with a time stamp.

The function's output can be used for direct I/O controlling and user logic programming.

Table. 4.4.29 - 245. Event messages.

Event block name	Event names
FSP1	Alarm ON/OFF
FSP1	Inhibit ON/OFF
FSP1	Blocked ON/OFF

The function registers its operation into the last twelve (12) time-stamped registers. The table below presents the structure of the function's register content.

Table. 4.4.29 - 246. Register content.

Register	Description
Date and time	dd.mm.yyyy hh:mm:ss.mss
Event	Event name
Inhibit time on	If on, it shows how long the inhibit is active
Time since last start	Time elapsed from last starting
Start count	Starts used at the triggering moment

4.4.30 Non-directional undercurrent protection (I<; 37)

The non-directional undercurrent function is used for monitoring motor loading especially in conveyor-type of applications. A sudden loss in the motor load indicates problems in the actual load rather than in the motor itself. In a conveyor application this may indicate a broken belt and the motor should be turned off immediately to avoid further problems. The cause may also be a mechanical breakdown of the apparatus the motor uses. In some cases this undercurrent function's output may be also used in an automation system to indicate that the device has finished its work load and is ready for a next task. In order to operate this function requires *motor running* status signal to be active. *Motor running* is connected internally from *Motor status monitoring* function. The operation of undercurrent protection is blocked when the motor is not running.

The non-directional undercurrent function is used for instant and time-delayed undercurrent protection. The operating decisions are based on phase current magnitude, constantly measured by the function.

The following figure presents a simplified function block diagram of the undercurrent function.

© Arcteq Relays Ltd
IM00021

Figure. 4.4.30 - 164. Simplified function block diagram of the I< function.

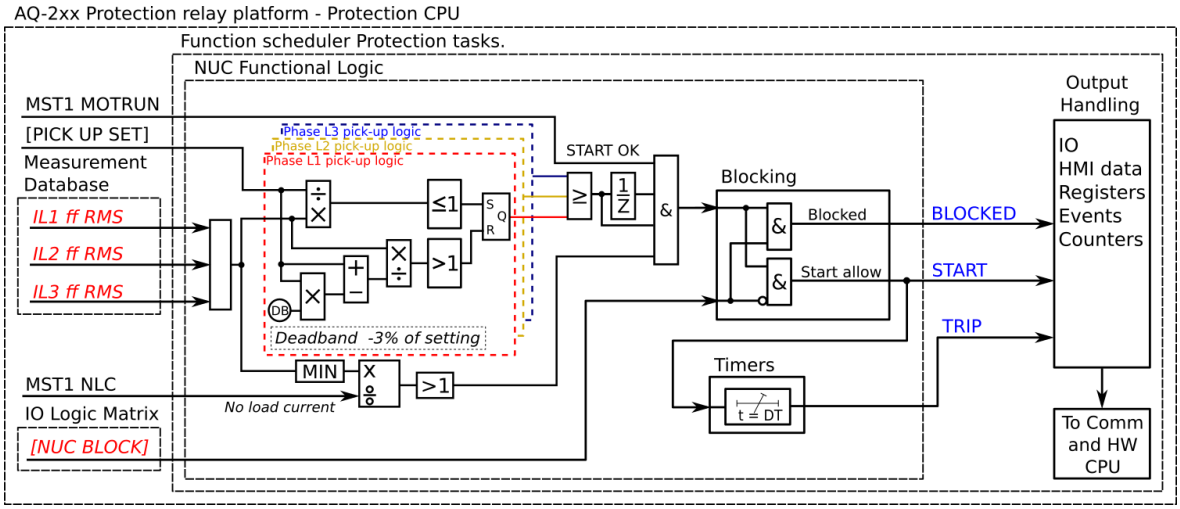

Measured input

The function block uses fundamental frequency component of phase current measurement values.

Table. 4.4.30 - 247. Measurement inputs of the I< function.

Signal	Description
I_{L1}RMS	Fundamental frequency component of phase L1 (A) current
I_{L2}RMS	Fundamental frequency component of phase L2 (B) current
I_{L3}RMS	Fundamental frequency component of phase L3 (C) current

General settings

The following general settings define the general behavior of the function. These settings are static i.e. it is not possible to change them by editing the setting group.

Table. 4.4.30 - 248. General settings of the function.

Name	Range	Default	Description
I< LN mode	• On • Blocked • Test • Test/ Blocked • Off	On	Set mode of NUC block. This parameter is visible only when *Allow setting of individual LN mode* is enabled in *General* menu.
I< force status to	• Normal • Start • Trip • Blocked	Normal	Force the status of the function. Visible only when *Enable stage forcing* parameter is enabled in *General* menu.
I< measurement side	• CT1 • CT2	CT1	Defines which current measurement module is used by the function. This setting is available if the device has more than one current measurement module.

Pick-up settings

The I_{set} setting parameter controls the the pick-up of the I< function. This defines the minimum allowed measured current before action from the function. The function constantly calculates the ratio between the I_{set} and the measured magnitude (I_m) for each of the three phases. The reset ratio of 103 % is built into the function and is always relative to the I_{set} value. The setting value is common for all measured phases. When the I_m exceeds the I_{set} value (in single, dual or all phases) it triggers the pick-up operation of the function.

Setting group selection controls the operating characteristics of the function, i.e. the user or user-defined logic can change function parameters while the function is running.

Table. 4.4.30 - 249. Motor data settings.

Name	Range	Step	Default	Description
Motor In Scaled	0.1... 40.0 x I_n	0.1 x I_n	-	The motor's nominal current scaled to per unit. If the user selects *Object In* in the CT settings, this value should be 1.00. If scaled to the CT nominal, this value may vary.
Motor In A	0.1...5,000 A	0.1 A	-	The motor's nominal current in amperes.
No load current<	0.1…40.0 x I_n	0.1 x I_n	0.2 x I_n	The motor's no load current. This setting defines the "Stopped" condition when the current is below this setting value. Also, when the current is below this value, the undercurrent protection stage is locked.
No load current< A	0.1...5 000 A	0.1 A	-	The motor's no load current in amperes.

Table. 4.4.30 - 250. Pick-up settings.

Name	Range	Step	Default	Description
I_{set}	0.10…40.00xI_n	0.01xI_n	0.5xI_n	Pick-up setting

Operating time characteristics for trip and reset

This function supports definite time delay (DT). For detailed information on these delay types please refer to the chapter "General properties of a protection function" and its section "Operating time characteristics".

Read-only parameters

The function's *Info* page displays useful, real-time information on the state of the protection function. It is accessed either through the device's HMI display, or through the setting tool software when it is connected to the device and its Live Edit mode is active.

© Arcteq Relays Ltd
IM00021

Table. 4.4.30 - 251. Information displayed by the function.

Name	Range	Description
I< LN behaviour	• On • Blocked • Test • Test/Blocked • Off	Displays the mode of NUC block. This parameter is visible only when *Allow setting of individual LN mode* is enabled in *General* menu.
I< condition	• Normal • Start • Trip • Blocked	Displays status of the protection function.
Expected operating time	0.000...1800.000s	Displays the expected operating time when a fault occurs.

Function blocking

The blocking signal is evaluated at the start of each program cycle. The blocking signals are connected to the function's dedicated input, which can be configured in the *IO → Blocking Input Control* tab of the function.

- When the pick-up element activates and the blocking signal is not active, a START signal is generated and the function starts or continues the trip-time countdown.
- When the pick-up element activates and the blocking input signal is active, a BLOCKED signal is generated, and the function does not process the event further.
- When START signal is already active and the blocking input signal becomes active, the START signal is reset and BLOCKED signal is generated. The release-time characteristics are processed as if the fault condition had been cleared.

The blocking signal needs to reach the device minimum of 5 ms before the set operating delay has passed in order for the blocking to activate in time.

Events and registers

The undercurrent function (abbreviated "NUC" in event block names) generates events and registers from the status changes in the events listed below. The user can select which event messages are stored in the main event buffer: ON, OFF, or both. The events triggered by the function are recorded with a time stamp.

The function outputs can be used for direct I/O controlling and user logic programming. The function also provides a resettable cumulative counter for the START, TRIP and BLOCKED events.

Table. 4.4.30 - 252. Event messages.

Event block name	Event names
NUC1	Start ON/OFF
NUC1	Trip ON/OFF
NUC1	Block ON/OFF

The function registers its operation into the last twelve (12) time-stamped registers. The register of the function records the ON event process data for START, TRIP or BLOCKED. The table below presents the structure of the function's register content.

Table. 4.4.30 - 253. Register content.

Register	Description
Date and time	dd.mm.yyyy hh:mm:ss.mss
Event	Event name
Fault type	L1-G…L1-L2-L3
Pre-trigger current	Start/Trip -20ms current
Fault current	Start/Trip current
Prefault current	Start -200ms current
Trip time remaining	0 ms...1800s
Setting group in use	Setting group 1...8 active

4.4.31 Mechanical jam protection (Im>; 51M)

The mechanical jam protection function is used for monitoring motor loading after motor starting. When a motor-run apparatus jams during its work load, this function can be used to disconnect the motor from the feeding network in order to avoid further damage to the motor drive. The function is active only after the motor has started, and it is blocked during motor starting. This is done through an internal connection of *Motor running* and through a *Motor starting* signal taken from the *Motor status monitoring* function. This function operates similarly to the motor starting/locked rotor function (Ist>; 48/14) although it operates on Definite Time delay and does not work during motor starting. Also, with the help of a dedicated locked rotor function and mechanical jam protection the user can divide all possible fault situations based on a quick definition of the fault types in function events. Additionally, the Ist> function's setup can be problematic with heavy inertia loads that experience a locked rotor situation during work load. Having separate functions for start-up and for mechanical jams divides the situations clearly; for example, the mechanical jam protection can be set to instant operation while the locked rotor function allows motor starting several tens of seconds.

Figure. 4.4.31 - 165. Simplified function block diagram of the Im> function.

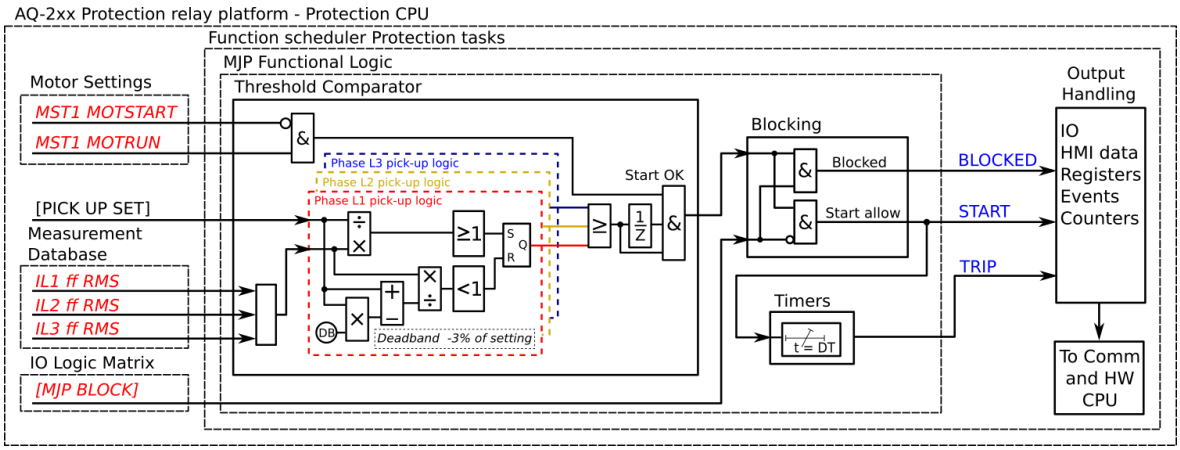

Measured input

The function block uses fundamental frequency component of current measurement values.

© Arcteq Relays Ltd
IM00021

Table. 4.4.31 - 254. Measurement inputs of the Im> function.

Signal	Description
I_{L1}RMS	Fundamental frequency component of L1 (A) current
I_{L2}RMS	Fundamental frequency component of L2 (B) current
I_{L3}RMS	Fundamental frequency component of L3 (C) current

General settings

The following general settings define the general behavior of the function. These settings are static i.e. it is not possible to change them by editing the setting group.

Table. 4.4.31 - 255. General settings of the function.

Name	Range	Default	Description
Im> LN mode	• On • Blocked • Test • Test/ Blocked • Off	On	Set mode of MJP block. This parameter is visible only when *Allow setting of individual LN mode* is enabled in *General* menu.
Im> force status to	• Normal • Start • Trip • Blocked	Normal	Force the status of the function. Visible only when *Enable stage forcing* parameter is enabled in *General* menu.
Im> measurement selection	• CT1 • CT2	POW1	Defines which current measurement module is used by the function. This setting is available if the device has more than one current measurement module.

Pick-up settings

The I_{set} setting parameter controls the pick-up of the Im> function. This defines the maximum allowed measured current before action from the function. The function constantly calculates the ratio between the I_{set} and the measured magnitude (I_m) for each of the three phases. The reset ratio of 97 % is built into the function and is always relative to the I_{set} value. The setting value is common for all measured phases, and when the I_m exceeds the I_{set} value (in single, dual or all phases) it triggers the pick-up operation of the function.

Table. 4.4.31 - 256. Motor data settings.

Name	Range	Step	Default	Description
Motor In Scaled	0.1... 40.0xI_n	0.1xI_n	-	The motor's nominal current scaled to per unit. If the user selects *Object In* in the CT settings, this value should be 1.00. If scaled to the CT nominal, this value may vary.
Motor In A	0.1...5 000.0A	0.1A	-	The motor's nominal current in amperes.

Name	Range	Step	Default	Description
Nominal starting current	0.1…40.0xI_n	0.1xI_n	6.0xI_n	The motor's locked rotor current with the nominal voltage. This setting is used for automatic curve selection and calculation. Also, the nominal starting capacity calculation is based on this value.
Nominal starting current A	0.1...5 000.0A	0.1A	-	The motor's locked rotor current in amperes.
Min locked rotor current	0.1…40.0xI_n	0.1xI_n	3.5xI_n	The motor's minimum locked rotor current. This setting defines the current limit for when this current is exceeded while the automatic curve selection and the control only short time constant (stall) are in use.
Min locked rotor current A	0.1...5 000.0A	0.1A	-	The motor's minimum locked rotor current. This setting defines the current limit for when this current is exceeded while the automatic curve selection and the control only short time constant (stall) are in use.
Max locked rotor current	0.1…40.0xI_n	0.1xI_n	7.5xI_n	Maximum locked rotor current of the motor. This setting defines the current limit which is maximum current for the motor to draw in locked rotor situation (starting or stalled). If the measured current exceeds this setting limit it is considered to be overcurrent fault and corresponding measures can be applied to disconnect the feeder and motor from the supply.
Max locked rotor current A	0.1...5 000.0A	0.1A	-	The maximum locked rotor current in amperes.
Max overload current	0.1…40.0xI_n	0.1xI_n	2.0xI_n	The motor's maximum overload current. Exceeding this setting stalls the motor. This setting defines when the thermal replica switches to the short (stall) time constant. As long as the current stays below this setting value, the motor should run even when overloaded.
Max overload current A	0.1...5 000.0A	0.1A	-	The maximum overload current of the motor in amperes.
Hot condition theta limit	0.0…100.0%	0.1%	70%	Setting the motor's thermal limit in a hot or a cold situation. When this setting value is not exceed while a locked rotor situation occurs, the function uses a cold stall curve adjusted with the actually used thermal capacity. The function uses a hot stall curve when this setting value is exceeded. This setting also applies to starts when the hot/cold selection is in use. Please note that using this setting requires that the Machine thermal overload protection (Tm>) function is activated and in use.
Safe stall time cold	0.1…600.0s	0.1s	20.0s	The safe stall time when the motor is cold. Unless this value is specified, it is set to be equal to the hot stall time. Most probably this leads to overprotection with the cold motor stall (best case scenario). This setting value is used for the cold thermal stall curve selection in automatic control. This parameter is also used in the motor start-up and the number of starts calculations.

© Arcteq Relays Ltd
IM00021

Name	Range	Step	Default	Description
Safe stall time hot	0.1…600.0s	0.1s	15.0s	The safe stall time when the motor is hot. This setting value is used for the hot thermal stall curve selection in automatic control. This parameter is also used in the motor start-up and the number of starts calculations.

Setting group selection controls the operating characteristics of the function, i.e. the user or user-defined logic can change function parameters while the function is running.

Table. 4.4.31 - 257. Pick-up settings.

Name	Range	Step	Default	Description
I_{set}	0.10…40.00xI_n	0.10xI_n	6.00xI_n	Pick-up setting

Operating time characteristics for trip and reset

This function supports definite time delay (DT). For detailed information on these delay types please refer to the chapter "General properties of a protection function" and its section "Operating time characteristics".

Read-only parameters

The function's *Info* page displays useful, real-time information on the state of the protection function. It is accessed either through the device's HMI display, or through the setting tool software when it is connected to the device and its Live Edit mode is active.

Table. 4.4.31 - 258. Information displayed by the function.

Name	Range	Step	Description
Im> LN behaviour	• On • Blocked • Test • Test/Blocked • Off	-	Displays the mode of MJP block. This parameter is visible only when *Allow setting of individual LN mode* is enabled in *General* menu.
Im> condition	• Normal • Start • Trip • Blocked	-	Displays status of the protection function.
Expected operating time	0.000...1800.000s	0.005s	Displays the expected operating time when a fault occurs. When IDMT mode is used, the expected operating time depends on the measured highest phase current value. If the measured current changes during a fault, the expected operating time changes accordingly.
Time remaining to trip	-1800.000...1800.000s	0.005s	When the function has detected a fault and counts down time towards a trip, this displays how much time is left before tripping occurs.
I_{meas}/I_{set} at the moment	0.00...1250.00	0.01	The ratio between the highest measured phase current and the pick-up value.

Function blocking

The blocking signal is evaluated at the start of each program cycle. The blocking signals are connected to the function's dedicated input, which can be configured in the *IO → Blocking Input Control* tab of the function.

- When the pick-up element activates and the blocking signal is not active, a START signal is generated and the function starts or continues the trip-time countdown.
- When the pick-up element activates and the blocking input signal is active, a BLOCKED signal is generated, and the function does not process the event further.
- When START signal is already active and the blocking input signal becomes active, the START signal is reset and BLOCKED signal is generated. The release-time characteristics are processed as if the fault condition had been cleared.

The blocking signal needs to reach the device minimum of 5 ms before the set operating delay has passed in order for the blocking to activate in time.

Events and registers

The load jam protection function (abbreviated "MJP" in event block names) generates events and registers from the status changes in the events listed below. The user can select which event messages are stored in the main event buffer: ON, OFF, or both. The events triggered by the function are recorded with a time stamp.

The function's outputs can be used for direct I/O controlling and user logic programming. The function also provides a cumulative counter for the START, TRIP and BLOCKED events.

Table. 4.4.31 - 259. Event messages.

Event block name	Event names
MJP1	Start ON/OFF
MJP1	Trip ON/OFF
MJP1	Block ON/OFF

The function registers its operation into the last twelve (12) time-stamped registers. The register of the function records the ON event process data for START, TRIP or BLOCKED. The table below presents the structure of the function's register content.

Table. 4.4.31 - 260. Register content.

Register	Description
Date and time	dd.mm.yyyy hh:mm:ss.mss
Event	Event name
Fault type	L1-G…L1-L2-L3
Pre-trigger current	Start/Trip -20ms current
Fault current	Start/Trip current
Prefault current	Start -200ms current
Trip time remaining	0 ms...1800s

© Arcteq Relays Ltd
IM00021

Register	Description
Setting group in use	Setting group 1...8 active

4.4.32 Resistance temperature detectors (RTD)

Resistance temperature detectors (or RTDs) can be used to measure both temperatures of motors/ generators and ambient temperatures. Typically an RTD is a thermocouple or of type PT100. Up to three (3) separate RTD modules based on an external Modbus are supported; each can hold up to eight (8) measurement elements. Up to two (2) separate RTD option cards are supported by this function. Sixteen (16) individual element monitors can be set for this alarm function, and each of those can be set to alarm two (2) separate alarms from one selected input. The user can set alarms and measurements to be either in degrees Celsius or Fahrenheit.

Figure. 4.4.32 - 166. Simplified function block diagram of the resistance temperature detection function.

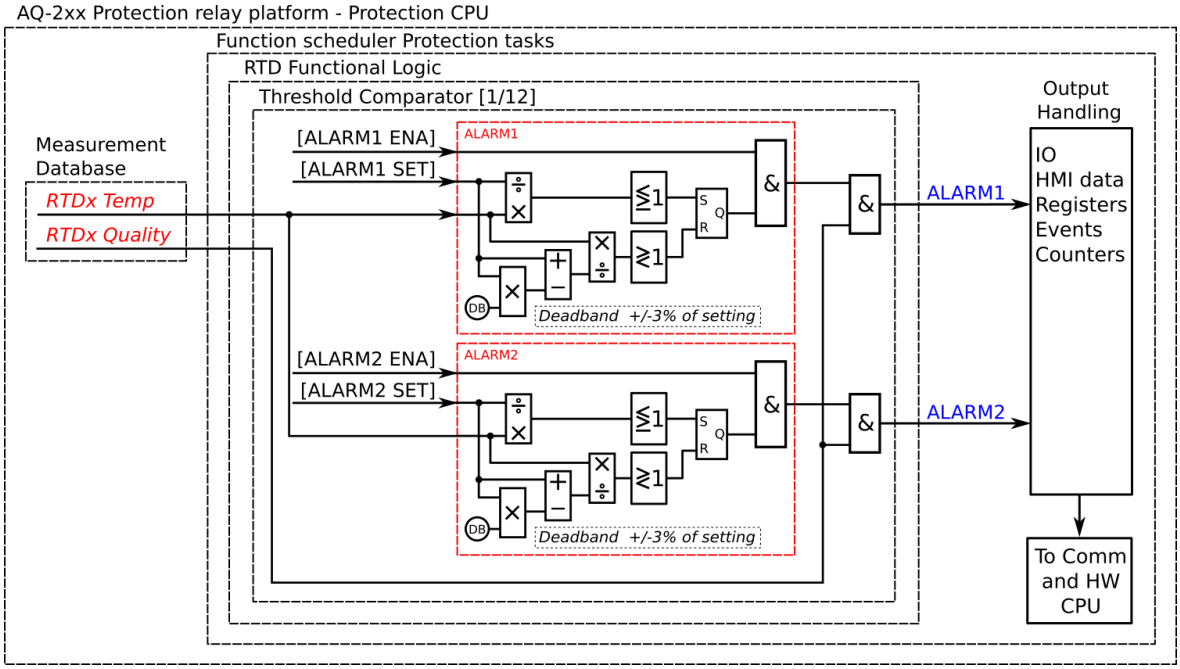

Settings

Table. 4.4.32 - 261. General settings of the function.

Name	Range	Default	Description
RTD LN mode	• On • Blocked • Test • Test/ Blocked • Off	On	Set mode of RTD block. This parameter is visible only when *Allow setting of individual LN mode* is enabled in *General* menu.

Name	Range	Default	Description
RTD LN behaviour	• On • Blocked • Test • Test/ Blocked • Off	-	Displays the mode of RTD block. This parameter is visible only when *Allow setting of individual LN mode* is enabled in *General* menu.

Setting up an RTD measurement, the user first needs to set the measurement module to scan the wanted RTD elements. A multitude of Modbus-based modules are supported. Communication requires bitrate, databits, parity, stopbits and Modbus I/O protocol to be set; this is done at *Communication → Connections*. Once communication is set, the wanted channels are selected at *Communication → Protocols → ModbusIO*. Then the user selects the measurement module from the three (3) available modules (A, B and C), as well as the poll address. Additionally, both the module type and the polled channels need to be set. When using a thermocouple module, the thermo element type also needs to be set for each of the measurement channels. Once these settings are done the RTDs are ready for other functions.

Table. 4.4.32 - 262. Function settings for Channel x (Sx).

Name	Range	Step	Default	Description
S1...S16 enable	No Yes	-	No	Enables/disables the selecion of sensor measurements and alarms.
S1...S16 module	• InternalRTD1 • InternalRTD2 • ExtModuleA • ExtModuleB • ExtModuleC	-	InternalRTD1	Selects the measurement module. Internal RTD modules are option cards installed to the device. External modules are Modbus based external devices.
S1...S16 channel	• Channel 0 • Channel 1 • Channel 2 • Channel 3 • Channel 4 • Channel 5 • Channel 6 • Channel 7	-	Channel 0	Selects the measurement channel in the selected module.
S1...S16 Deg C/Dec F	• Deg C • Deg F	-	Deg C	Selects the measurement temperature scale (Celsius or Fahrenheit).
S1...S16 Measurement	-	-	-	Displays the measurement value in the selected temperature scale.
S1...S16 Sensor	• Ok • Invalid	-	-	Displays the measured sensor's data validity. If the sensor reading has any problems, the sensor data is set to "Invalid" and the alarms are not activated.
S1...S16 Enable alarm 1	• Disable • Enable	-	Disable	Enables/disables the selection of Alarm 1 for the measurement channel x.
S1...S16 Alarm1 >/<	• > • <	-	>	Selects whether the alarm activates when measurement is above or below the pick-up setting value.

© Arcteq Relays Ltd
IM00021

Name	Range	Step	Default	Description
S1...S16 Alarm1	-101.0…2000.0deg	0.1deg	0.0deg	Sets the pick-up value for Alarm 1. The alarm is activated if the measurement goes above or below this setting mode (depends on the selected mode in "Sx Alarm1 >/<").
S1...S16 sensor	• Ok • Invalid	-	-	Displays the measured sensor's data validity. If the sensor reading has any problems, the sensor data is set to "Invalid" and the alarms are not activated.
S1...S16 Enable alarm 2	• Disable • Enable	-	Disable	Enables/disables the selection of Alarm 2 for the measurement channel x.
S1...S16 Alarm2 >/<	• >\ • <	-	>	Selects whether the measurement is above or below the setting value.
S1...S16 Alarm2	-101.0…2000.0deg	0.1deg	0.0deg	Sets the value for Alarm 2. The alarm is activated if the measurement goes above or below this setting mode (depends on the selected mode in "Sx Alarm2 >/<").

Function can be set to monitor the measurement data from previously set RTD channels. A single channel can be set to have several alarms if the user sets the channel to multiple sensor inputs. In each sensor setting the user can select the monitored module and channel, as well as the monitoring and alarm setting units (°C or °F). The alarms can be enabled, given a setting value (in degrees), and be set to trigger either above or below the setting value. There are sixteen (16) available sensor inputs in the function. An active alarm requires a valid channel measurement. It can be invalid if communication is not working or if a sensor is broken.

When the RTDs have been set, the values can be read to SCADA (or some other control system). The alarms can also be used for direct output control as well as in logics.

Events

The resistance temperature detector function (abbreviated "RTD" in event block names) generates events and registers from the status changes in the events listed below. The user can select which event messages are stored in the main event buffer: ON, OFF, or both. The events triggered by the function are recorded with a time stamp.

The function's outputs can be used for direct I/O controlling and user logic programming. The function also provides a resettable cumulative counter for the ALARM events.

The function offers sixteen (16) independent stages; the events are segregated for each stage operation.

Table. 4.4.32 - 263. Event messages.

Event block name	Event names
RTD1	S1...S16 Alarm1 ON/OFF
RTD1	S1...S16 Alarm2 ON/OFF
RTD1	S1...S16 Meas Ok/Invalid

4.4.33 Programmable stage (PSx>/<; 99)

The programmable stage is a stage that the user can program to create more advanced applications, either as an individual stage or together with programmable logic. The device has ten programmable stages, and each can be set to follow one to three analog measurements. The programmable stages have three available pick up terms options: overX, underX and rate-of-change of the selected signal. Each stage includes a definite time delay to trip after a pick-up has been triggered.

The programmable stage cycle time is 5 ms. The pick-up delay depends on which analog signal is used as well as its refresh rate (typically under a cycle in a 50 Hz system).

The number of programmable stages to be used is set in the *INFO* tab. When this function has been set as "Activated", the number of programmable stages can be set anywhere between one (1) and ten (10) depending on how many the application needs. In the image below, the number of programmable stages have been set to two which makes PS1 and PS2 to appear. Inactive stages are hidden until they are activated.

Please note that setting the number of available stages does not activate those stages, as they also need to be enabled individually with the *PSx >/< Enabled* parameter. When enabled an active stage shows its current state (condition), the expected operating time and the time remaining to trip under the activation parameters. If a stage is not active the *PSx>/< condition* parameter will merely display “Disabled”.

Setting group selection controls the operating characteristics of the function, i.e. the user or user-defined logic can change function parameters while the function is running.

General settings

The following general settings define the general behavior of the function. These settings are static i.e. it is not possible to change them by editing the setting group.

Table. 4.4.33 - 264. General settings of the function.

Name	Range	Description
PSx >/< LN mode	• On • Blocked • Test • Test/ Blocked • Off	Set mode of PSx block. This parameter is visible only when *Allow setting of individual LN mode* is enabled in *General* menu.
PSx >/< LN behaviour	• On • Blocked • Test • Test/ Blocked • Off	Displays the mode of PSx block. This parameter is visible only when *Allow setting of individual LN mode* is enabled in *General* menu.
PSx >/< Available stages	1...10	Defines the available amount of stages.
PSx >/< Enabled	• Disabled • Enabled	Enables the stage.
PSx >/< Force status to	• Normal • Start • Trip • Blocked	Force the status of the function. Visible only when *Enable stage forcing* parameter is enabled in *General* menu.

© Arcteq Relays Ltd
IM00021

Name	Range	Description
PSx >/< Measurement setting	• One magnitude comp • Two magnitude comp • Three magnitude comp	Defines how many measurement magnitudes are used by the stage.
PSx >/< Magnitude handling ("Two magnitude comp" selected)	Mag1 x Mag2	Multiplies Signal 1 by Signal 2. The comparison uses the product of this calculation.
	Mag1 / Mag2	Divides Signal 1 by Signal 2. The comparison uses the product of this calculation.
	Max (Mag1, Mag2)	The bigger value of the chosen signals is used in the comparison.
	Min (Mag1, Mag2)	The smaller value of the chosen signals is used in the comparison.
	Mag1 OR Mag2	Either of the chosen signals has to fulfill the pick-up condition. Both signals have their own pick-up setting.
	Mag1 AND Mag2	Both of the chosen signals have to fulfill the pick-up condition. Both signals have their own pick-up setting.
	Mag1 – Mag2	Subtracts Signal 2 from Signal 1. The comparison uses the product of this calculation.
PSx >/< Magnitude handling ("Three magnitude comp" selected)	Mag1 x Mag2 x Mag3	Multiplies Signals 1, 2 and 3. The comparison uses the product of this calculation.
	Max (Mag1, Mag2, Mag3);	The biggest value of the chosen signals is used in the comparison.
	Min (Mag1, Mag2, Mag3)	The smallest value of the chosen signals is used in the comparison.
	Mag1 OR Mag2 OR Mag3	Any of the signals fulfills the pick-up condition. Each signal has their own pick-up setting.
	Mag1 AND Mag2 AND Mag3	All of the signals need to fulfill the pick-up condition. Each signal has their own pick-up setting.
	(Mag1 OR Mag2) AND Mag3	Signals 1 OR 2 AND 3 need to fulfill the pick-up condition. Each signal has their own pick-up setting.
PSx Magnitude selection	• Currents • Voltages • Powers • Impedances and admittances • Others	Defines the measurement type used by the stage
PSx MagnitudeX	See table below.	Defines the measurement used by the stage. Available parameters depend on selected measurement type.

Name	Range	Description
PSx MagnitudeX multiplier	-5 000 000...5 000 000	Multiplies the selected measurement. 1 by default (no multiplication). See section "Magnitude multiplier" for more information.

Analog values

The numerous analog signals have been divided into categories to help the user find the desired value.

Table. 4.4.33 - 265. Phase and residual current measurements (IL1, IL2, IL3, Io1 and Io2)

Name	Description
ILx ff (p.u.)	Fundamental frequency RMS value (in p.u.)
ILx 2nd h.	ILx 2nd harmonic value (in p.u.)
ILx 3rd h.	ILx 3nd harmonic value (in p.u.)
ILx 4th h.	ILx 4nd harmonic value (in p.u.)
ILx 5th h.	ILx 5nd harmonic value (in p.u.)
ILx 7th h.	ILx 7nd harmonic value (in p.u.)
ILx 9th h.	ILx 9nd harmonic value (in p.u.)
ILx 11th h.	ILx 11nd harmonic value (in p.u.)
ILx 13th h.	ILx 13nd harmonic value (in p.u.)
ILx 15th h.	ILx 15nd harmonic value (in p.u.)
ILx 17th h.	ILx 17nd harmonic value (in p.u.)
ILx 19th h.	ILx 19nd harmonic value (in p.u.)
ILx TRMS	ILx TRMS value (in p.u.)
ILx Ang	ILx Angle (degrees)

Table. 4.4.33 - 266. Other current measurements

Name	Description
I0Z Mag	Zero sequence current value (in p.u.)
I0CALC Mag	Calculated I0 value (in p.u.)
I1 Mag	Positive sequence current value (in p.u.)
I2 Mag	Negative sequence current value (in p.u.)
I0CALC Ang	Angle of calculated residual current (degrees)

© Arcteq Relays Ltd
IM00021

Name	Description
I1 Ang	Angle of positive sequence current (degrees)
I2 Ang	Angle of negative sequence current (degrees)
I01ResP	I01 primary current of a current-resistive component
I01CapP	I01 primary current of a current-capacitive component
I01ResS	I01 secondary current of a current-resistive component
I01CapS	I01 secondary current of a current-capacitive component
I02ResP	I02 primary current of a current-resistive component
I02CapP	I02 primary current of a current-capacitive component
I02ResS	I02 secondary current of a current-resistive component
I02CapS	I02 secondary current of a current-capacitive component

Table. 4.4.33 - 267. Voltage measurements

Name	Description
UL12Mag	UL12 Primary voltage V
UL23Mag	UL23 Primary voltage V
UL31Mag	UL31 Primary voltage V
UL1Mag	UL1 Primary voltage V
UL2Mag	UL2 Primary voltage V
UL3Mag	UL3 Primary voltage V
UL12Ang	UL12 angle (degrees)
UL23Ang	UL23 angle (degrees)
UL31Ang	UL31 angle (degrees)
UL1Ang	UL1 angle (degrees)
UL2Ang	UL2 angle (degrees)
UL3Ang	UL3 angle (degrees)
U0Ang	UL0 angle (degrees)
U0CalcMag	Calculated residual voltage
U1 pos.seq.V Mag	Positive sequence voltage
U2 neg.seq.V Mag	Negative sequence voltage
U0CalcAng	Calculated residual voltage angle (degrees)
U1 pos.seq.V Ang	Positive sequence voltage angle (degrees)

Name	Description
U2 neg.seq.V Ang	Negative sequence voltage angle (degrees)
U3SMag	U3 channel voltage magnitude when the channel is set to "SS" mode
U3SAng	U3 channel voltage angle when the channel is set to "SS" mode
U4SMag	U4 channel voltage magnitude when the channel is set to "SS" mode
U4SAng	U4 channel voltage angle when the channel is set to "SS" mode
T1 Tap U	Voltage measured by the AVR function in the T1 device (in parallel tap changer mode)
T2 Tap U	Voltage measured by the AVR function in the T2 device (in parallel tap changer mode)
T3 Tap U	Voltage measured by the AVR function in the T3 device (in parallel tap changer mode)
T4 Tap U	Voltage measured by the AVR function in the T4 device (in parallel tap changer mode)

Table. 4.4.33 - 268. Power measurements

Name	Description
S3PH	Three-phase apparent power S (kVA)
P3PH	Three-phase active power P (kW)
Q3PH	Three-phase reactive power Q (kvar)
tanfi3PH	Three-phase active power direction
cosfi3PH	Three-phase reactive power direction
SLx	Phase apparent power L1 / L2 / L3 S (kVA)
PLx	Phase active power L1 / L2 / L3 P (kW)
QLx	Phase reactive power L1 / L2 / L3 Q (kVar)
tanfiLx	Phase active power direction L1 / L2 / L3
cosfiLx	Phase reactive power direction L1 / L2 / L3
PoFaLx	Phase power factor L1 / L2 / L3
PoFa3PH	Three-phase power factor

Table. 4.4.33 - 269. Phase-to-phase and phase-to-neutral impedances, resistances and reactances

Name	Description
RLxPri	Resistance R L12, L23, L31, L1, L2, L3 primary (Ω)
XLxPri	Reactance X L12, L23, L31, L1, L2, L3 primary (Ω)
ZLxPri	Impedance Z L12, L23, L31, L1, L2, L3 primary (Ω)
RLxSec	Resistance R L12, L23, L31, L1, L2, L3 secondary (Ω)

© Arcteq Relays Ltd
IM00021

Name	Description
XLxSec	Reactance X L12, L23, L31, L1, L2, L3 secondary (Ω)
ZLxSec	Impedance Z L12, L23, L31, L1, L2, L3 secondary (Ω)
ZLxAngle	Impedance Z L12, L23, L31, L1, L2, L3 angle

Table. 4.4.33 - 270. Other impedances, resistances and reactances

Name	Description
RSeqPri	Positive Resistance R primary (Ω)
XSeqPri	Positive Reactance X primary (Ω)
RSeqSec	Positive Resistance R secondary (Ω)
XSeqSec	Positive Reactance X secondary (Ω)
ZSeqPri	Positive Impedance Z primary (Ω)
ZSeqSec	Positive Impedance Z secondary (Ω)
ZSeqAngle	Positive Impedance Z angle

Table. 4.4.33 - 271. Conductances, susceptances and admittances (L1, L2, L3)

Name	Description
GLxPri	Conductance G L1, L2, L3 primary (mS)
BLxPri	Susceptance B L1, L2, L3 primary (mS)
YLxPriMag	Admittance Y L1, L2, L3 primary (mS)
GLxSec	Conductance G L1, L2, L3 secondary (mS)
BLxSec	Susceptance B L1, L2, L3 secondary (mS)
YLxSecMag	Admittance Y L1, L2, L3 secondary (mS)
YLxAngle	Admittance Y L1, L2, L3 angle (degrees)

Table. 4.4.33 - 272. Other conductances, susceptances and admittances

Name	Description
G0Pri	Conductance G0 primary (mS)
B0Pri	Susceptance B0 primary (mS)
G0Sec	Conductance G0 secondary (mS)
B0Sec	Susceptance B0 secondary (mS)
Y0Pri	Admittance Y0 primary (mS)

Name	Description
Y0Sec	Admittance Y0 secondary (mS)
Y0Angle	Admittance Y0 angle

Table. 4.4.33 - 273. Other measurements

Name	Description
System f.	System frequency
Ref f1	Reference frequency 1
Ref f2	Reference frequency 2
M Thermal T	Motor thermal temperature
F Thermal T	Feeder thermal temperature
T Thermal T	Transformer thermal temperature
RTD meas 1…16	RTD measurement channels 1…16
Ext RTD meas 1…8	External RTD measurement channels 1…8 (ADAM)
mA input 7,8,15,16	mA input channels 7, 8, 15, 16
ASC 1…4	Analog scaled curves 1…4
mAIn1…4 (Tcard1/2)	mA input channels in T option card(s)

Magnitude multiplier

Programmable stages can be set to follow one, two or three analog measurements with the *PSx >/< Measurement setting* parameter. The user must choose a measurement signal value to be compared to the set value, and possibly also set a scaling for the signal. The image below is an example of scaling: a primary zero sequence voltage has been scaled to a percentage value for easier handling when setting up the comparator.

The scaling factor was calculated by taking the inverse value of a 20 kV system:

$$k = \frac{1}{20\,000\ \mathrm{V}/\sqrt{3}} = 0.008\,66$$

When this multiplier is in use, the full earth fault zero sequence voltage is 11 547 V primary which is then multiplied with the above-calculated scaling factor, inversing the final result to 100%. This way a pre-processed signal is easier to set, although it is also possible to just use the scaling factor of 1.0 and set the desired pick-up limit as the primary voltage. Similarly, any chosen measurement value can be scaled to the desired form.

Read-only parameters

The function's *Info* page displays useful, real-time information on the state of the protection function. It is accessed either through the device's HMI display, or through the setting tool software when it is connected to the device and its Live Edit mode is active.

© Arcteq Relays Ltd
IM00021

Table. 4.4.33 - 274. Information displayed by the function.

Name	Range	Description
PSx >/< LN behaviour	• On • Blocked • Test • Test/Blocked • Off	Displays the mode of PSx block. This parameter is visible only when *Allow setting of individual LN mode* is enabled in *General* menu.
Condition	• Normal • Start • Trip • Blocked	Displays status of the function.
Expected operating time	-1800.000...1800.000s	Displays the expected operating time when a fault occurs.
Time remaining to trip	0.000...1800.000s	When the function has detected a fault and counts down time towards a trip, this displays how much time is left before tripping occurs.
PSx Scaled magnitude X	-5 000 000...5 000 000	Displays measurement value after multiplying it the value set to *PSx Magnitude multiplier*.
PSx >/< MeasMag1/ MagSet1 at the moment	-5 000 000...5 000 000	The ratio between measured magnitude and the pick-up setting.
PSx >/< MeasMag2/ MagSet2 at the moment	-5 000 000...5 000 000	The ratio between measured magnitude and the pick-up setting.
PSx >/< MeasMag3/ MagSet3 at the moment	-5 000 000...5 000 000	The ratio between measured magnitude and the pick-up setting.
PSx >/< CalcMeasMag/ MagSet at the moment	-5 000 000...5 000 000	The ratio between calculated magnitude and the pick-up setting.

Pick-up settings

The *Pick-up setting Mag* setting parameter controls the pick-up of the PSx>/< function. This defines the maximum or minimum allowed measured magnitude before action from the function. The function constantly calculates the ratio between the set and the measured magnitudes. The user can set the reset hysteresis in the function (by default 3 %). It is always relative to the *Pick-up setting Mag* value.

Table. 4.4.33 - 275. Pick-up settings.

Name	Range	Step	Default	Description
PS# Pick-up term Mag#	• Over > • Over (abs) > • Under < • Under (abs) < • Delta set (%) +/- > • Delta abs (%) > • Delta +/- measval • Delta abs measval	-	Over	Comparator mode for the magnitude. See "Comparator modes" section below for more information.
PS# Pick-up setting Mag#/calc >/<	-5 000 000.0000…5 000 000.0000	0.0001	0.01	Pick-up magnitude
PS# Setting hysteresis Mag#	0.0000…50.0000%	0.0001%	3%	Setting hysteresis
Definite operating time delay	0.000…1800.000s	0.005s	0.04s	Delay setting
Release time delays	0.000…1800.000s	0.005s	0.06s	Pick-up release delay

Comparator modes

When setting the comparators, the user must first choose a comparator mode.

Table. 4.4.33 - 276. Comparator modes

Mode	Description
Over >	Greater than. If the measured signal is greater than the set pick-up level, the comparison condition is fulfilled.
Over (abs) >	Greater than (absolute). If the absolute value of the measured signal is greater than the set pick-up level, the comparison condition is fulfilled.
Under <	Less than. If the measured signal is less than the set pick-up level, the comparison condition is fulfilled. The user can also set a blocking limit: the comparison is not active when the measured value is less than the set blocking limit.
Under (abs) <	Less than (absolute). If the absolute value of the measured signal is less than the set pick-up level, the comparison condition is fulfilled. The user can also set a blocking limit: the comparison is not active when the measured value is less than the set blocking limit.
Delta set (%) +/- >	Relative change over time. If the measured signal changes more than the set relative pick-up value in 20 ms, the comparison condition is fulfilled. The condition is dependent on direction.
Delta abs (%) >	Relative change over time (absolute). If the measured signal changes more than the set relative pick-up value in 20 ms in either direction, the comparison condition is fulfilled. The condition is not dependent on direction.

© Arcteq Relays Ltd
IM00021

Mode	Description
Delta +/- measval	Change over time. If the measured signal changes more than the set pick-up value in 20 ms, the comparison condition is fulfilled. The condition is dependent on direction.
Delta abs measval	Change over time (absolute). If the measured signal changes more than the set pick-up value in 20 ms in either direction, the comparison condition is fulfilled. The condition is not dependent on direction.

The pick-up level is set individually for each comparison. When setting up the pick-up level, the user needs to take into account the modes in use as well as the desired action. The pick-up limit can be set either as positive or as negative. Each pick-up level has a separate hysteresis setting which is 3 % by default.

The user can set the operating and releasing time delays for each stage.

Function blocking

The blocking signal is evaluated at the start of each program cycle. The blocking signals are connected to the function's dedicated input, which can be configured in the *IO → Blocking Input Control* tab of the function.

- When the pick-up element activates and the blocking signal is not active, a START signal is generated and the function starts or continues the trip-time countdown.
- When the pick-up element activates and the blocking input signal is active, a BLOCKED signal is generated, and the function does not process the event further.
- When START signal is already active and the blocking input signal becomes active, the START signal is reset and BLOCKED signal is generated. The release-time characteristics are processed as if the fault condition had been cleared.

The blocking signal needs to reach the device minimum of 5 ms before the set operating delay has passed in order for the blocking to activate in time.

Events and registers

The programmable stage function (abbreviated "PSx" in event block names) generates events and registers from the status changes in the events listed below. The user can select which event messages are stored in the main event buffer: ON, OFF, or both. The events triggered by the function are recorded with a time stamp.

The function's outputs can be used for direct I/O controlling and user logic programming. The function also provides a resettable cumulative counter for the START, TRIP and BLOCKED events.

Table. 4.4.33 - 277. Event messages.

Event block name	Event names
PSx	PS1...10 >/< Start ON/OFF
PSx	PS1...10 >/< Trip ON/OFF
PSx	PS1...10 >/< Block ON/OFF

The function registers its operation into the last twelve (12) time-stamped registers. The register of the function records the ON event process data for START, TRIP or BLOCKED. The table below presents the structure of the function's register content.

Table. 4.4.33 - 278. Register content.

Register	Description
Date and time	dd.mm.yyyy hh:mm:ss.mss
Event	Event name
>/< Mag#	The numerical value of the magnitude
Mag#/Set#	Ratio between the measured magnitude and the pick-up setting
Trip time remaining	0 ms...1800s
Setting group in use	Setting group 1...8 active

4.4.34 Arc fault protection (IArc>/I0Arc>; 50Arc/50NArc)

Arc faults occur for a multitude of reasons: e.g. insulation failure, incorrect operation of the protected device, corrosion, overvoltage, dirt, moisture, incorrect wiring, or even because of aging caused by electric load. It is important to detect the arc as fast as possible in order to minimize its effects. Using arc sensors to detect arc faults is much faster than merely measuring currents and voltages. In busbar protection devices with normal protection can be too slow to disconnect arcs within a safe time frame. For example, it may be necessary to delay operation time for hundreds of milliseconds when setting up an overcurrent protection relay to control the feeder breakers to achieve selectivity. This delay can be avoided by using arc protection. The arc protection card has a high-speed output to trip signals faster as well as to extend the speed of arc protection.

The arc protection card has four (4) sensor channels, and up to three (3) arc point sensors can be connected to each channel. The sensor channels support Arcteq AQ-01 (light detecting) and AQ-02 (pressure and light detecting) sensors. Optionally, the protection function can also be applied with a phase current or a residual current condition: the function trips only if the light and overcurrent conditions are met.

Table. 4.4.34 - 279. Output signals of the IArc>/I0Arc> function.

Outputs	Activation condition
Channel 1 Light In Channel 2 Light In Channel 3 Light In Channel 4 Light In	The arc protection card's sensor channel detects light.
ARC Binary input signal	The arc protection card's binary input is energized.
I/I0 Arc> Ph. curr. START I/I0 Arc> Res. curr. START	The measured phase current or the residual current is over the set limit.
I/I0 Arc> Ph. curr. BLOCKED I/I0 Arc> Res. curr. BLOCKED	The phase current or the residual current measurement is blocked by an input.

© Arcteq Relays Ltd
IM00021

Outputs	Activation condition
I/I0 Arc> Zone 1 TRIP I/I0 Arc> Zone 2 TRIP I/I0 Arc> Zone 3 TRIP I/I0 Arc> Zone 4 TRIP	All required conditions for tripping the zone are met (light OR light and current).
I/I0 Arc> Zone 1 BLOCKED I/I0 Arc> Zone 2 BLOCKED I/I0 Arc> Zone 3 BLOCKED I/I0 Arc> Zone 4 BLOCKED	All required conditions for tripping the zone are met (light OR light and current) but the tripping is blocked by an input.
I/I0 Arc> S1 Sensor fault I/I0 Arc> S2 Sensor fault I/I0 Arc> S3 Sensor fault I/I0 Arc> S4 Sensor fault	The detected number of sensors in the channel does not match the settings.
I/I0 Arc> IO unit fault	The number of connected AQ-100 series units does not match the number of units set in the settings.

Example of scheme setting

The following examples helps the user better understand how the arc protection function is set. In the examples AQ-101 models are used to extend the protection of Zone 2 and to protect each outgoing feeder (Zone 3).

This scheme is a single-line diagram with a protection relay equipped with an arc protection option card at the incoming feeder and with AQ-101 arc protection relays installed to the outgoing feeders.

Figure. 4.4.34 - 167. Scheme with AQ-101 arc protection relays.

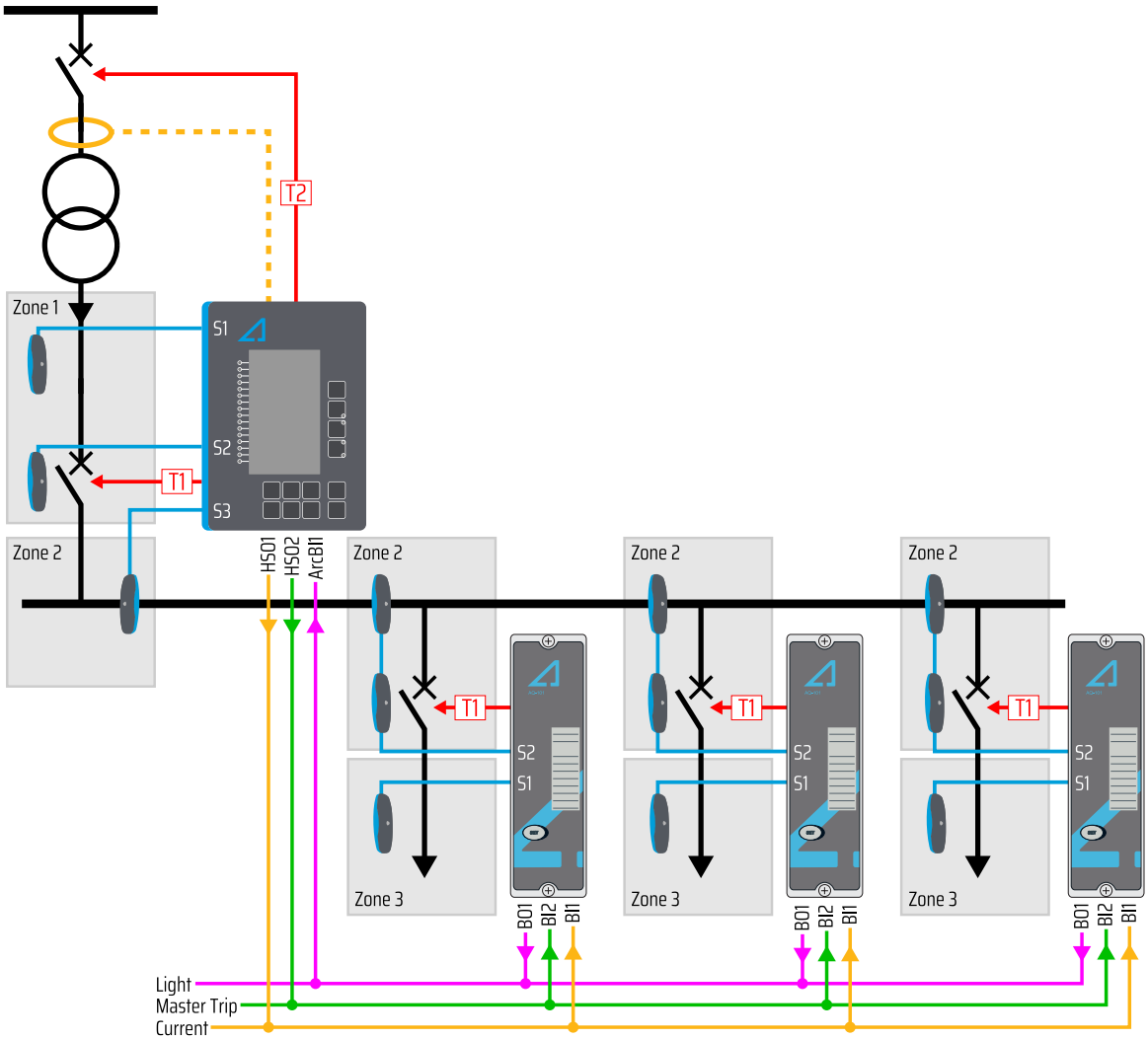

To set the zones for the device installed to the incoming feeder, start by enabling the protected zones (in this case, Zones 1 and 2). Then define which sensor channels are sensing which zones:

- Channel 1: Installed to incoming feeder cable compartment. Enabled in Zone 1.
- Channel 2: Installed to incoming feeder circuit breaker compartment. Enabled in Zone 1.
- Channel 3: Installed to busbar. Enabled in Zone 2.

The high-speed output contacts HSO1 and HSO2 have been set to send overcurrent and master trip signals to the AQ-101 arc protection relays. The AQ 100 series devices binary outputs (BO1) send test pulses once a second to check the health of the wiring between the AQ 100 series units and the binary input "ArcBI1" in the device installed to the incoming feeder. The parameter *I/I0 Arc> Self supervision test pulse* should be activated when connecting the AQ 100 series units to the main unit to prevent the pulses from activating ArcBI1.

The next example is similar to the previous one. However, this time each outgoing feeder has an AQ 250 protection device instead of an AQ-101 arc protection relay.

© Arcteq Relays Ltd
IM00021

Figure. 4.4.34 - 168. Scheme with protection devices.

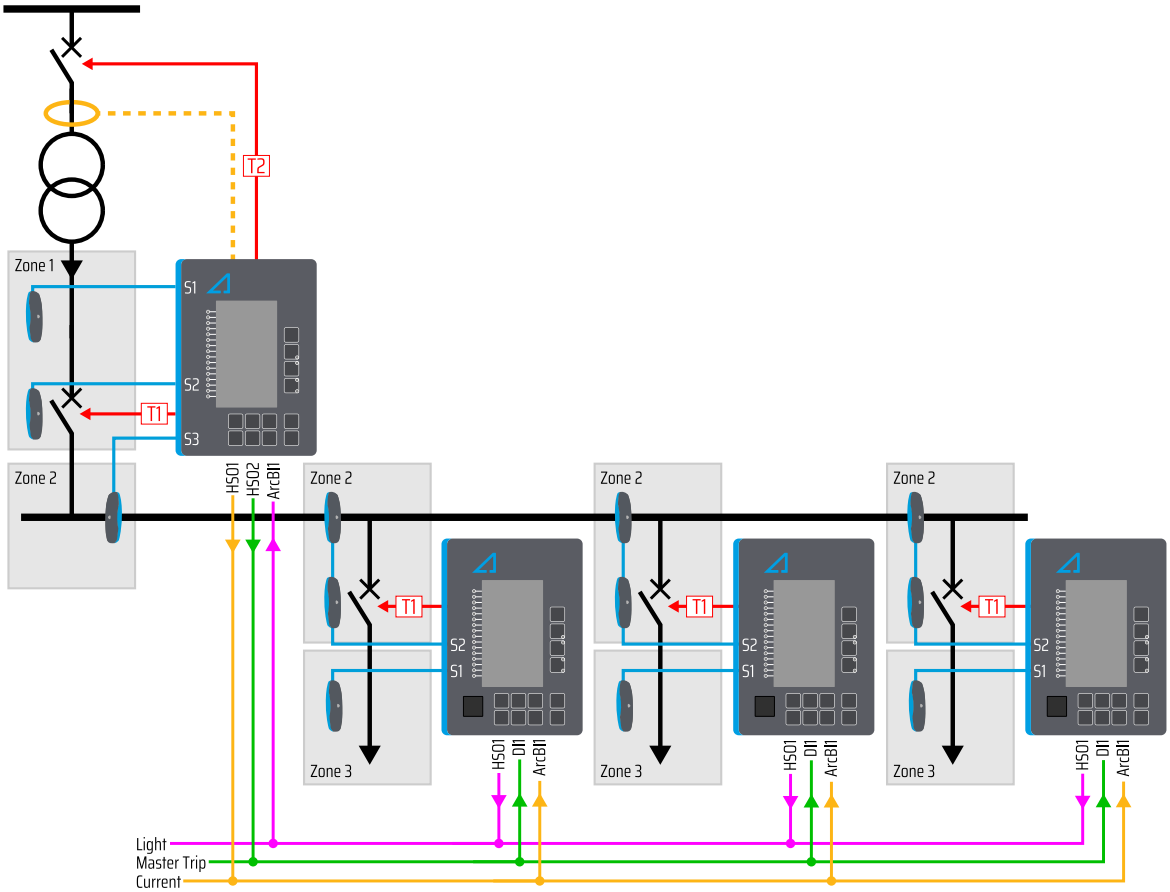

The settings for the device supervising the incoming feeder are the same as in the first example. The devices supervising the busbar and the outgoing feeder, however, use different settings:

- Channel 1: Installed to outgoing feeder cable compartment. Enabled in Zone 3.
- Channel 2: Installed to outgoing feeder circuit breaker compartment and the busbar. Enabled in Zone 2.

If either phase overcurrent or residual overcurrent is needed for the tripping decision, they can be enabled in the same way as light sensors in the zone. When a current channel is enabled, the measured current needs to be above the set current limit in addition to light sensing for the zone to trip.

Measured input

Arc protection uses samples based on current measurements. If the required number of samples is found to be above the setting limit, the current condition activates. The arc protection can use either phase currents, residual currents or both.

Table. 4.4.34 - 280. Measurement inputs of the U1/U2>/< function.

Signal	Description
I_{L1} samples	Samples received by I_{L1} current measurement channel
I_{L2} samples	Samples received by I_{L2} current measurement channel
I_{L3} samples	Samples received by I_{L3} current measurement channel

Signal	Description
I_{01} samples	Samples received by I_{01} current measurement channel
I_{02} samples	Samples received by I_{02} current measurement channel

General settings

The following general settings define the general behavior of the function. These settings are static i.e. it is not possible to change them by editing the setting group.

Table. 4.4.34 - 281. General settings of the function.

Name	Range	Default	Description
I/I0 Arc> LN mode	• On • Blocked • Test • Test/Blocked • Off	On	Set mode of ARC block. This parameter is visible only when *Allow setting of individual LN mode* is enabled in *General* menu.
I/I0 Arc> force status to	• Normal • PH curr blocked • PH curr Start • ResCurr Blocked • ResCurr Start • Zone 1 Trip • Zone1 Blocked • Zone2 Trip • Zone2 Blocked • Zone3 Trip • Zone3 Blocked • Zone4 Trip • Zone4 Blocked	Normal	Force the status of the function. Visible only when *Enable stage forcing* parameter is enabled in *General* menu.
Channel 1 sensors	• No sensors • 1 sensor • 2 sensors • 3 sensors	No sensors	Defines the number of sensors connected to the channel (channels 1/2/3/4). Used for supervising the health of the connection.
Channel 2 sensors			
Channel 3 sensors			
Channel 4 sensors			

© Arcteq Relays Ltd
IM00021

Name	Range	Default	Description
Channel 1 sensor status	• Sensors OK • Configuration fault state	-	Displays the status of the sensor channel. If the number of sensors connected to the channel does not match with the set "Channel 1/2/3/4 sensors" setting, this parameter will go to the "Configuration fault" state.
Channel 2 sensor status			
Channel 3 sensor status			
Channel 4 sensor status			

Pick-up settings

The pick-up of each zone of the Iarc>/I0arc> function is controlled by one of the following: the phase current pick-up setting, the residual current pick-up setting, or the sensor channels. The pick-up setting depends on which of these are activated in the zone.

Setting group selection controls the operating characteristics of the function, i.e. the user or user-defined logic can change function parameters while the function is running.

Table. 4.4.34 - 282. Enabled Zone pick-up settings.

Name	Range	Step	Default	Description
Phase current pick-up	0.05...40.00 x I_n	0.01 x I_n	1.2 x I_n	The phase current measurement's pick-up value (in p.u.).
I0 input selection	• None • I01 • I02	-	None	Selects the residual current channel (I01 or I02).
Res.current pick-up	0.05...40.00 x I_{0n}	0.01 x I_{0n}	1.2 x I_{0n}	The residual current measurement's pick-up value (in p.u.).
ZoneX Enabled	• Disabled • Enabled	-	Disabled	Enables the chosen zone. Up to 4 zones can be enabled.
ZoneX Ph. curr. Enabled	• Disabled • Enabled	-	Disabled	The phase overcurrent allows the zone to trip when light is detected.
ZoneX Res. curr. Enabled	• Disabled • Enabled	-	Disabled	The residual overcurrent allows the zone to trip when light is detected.
ZoneX Light 1 Enabled	• Disabled • Enabled	-	Disabled	Light detected in sensor channel 1 trips the zone.

Name	Range	Step	Default	Description
ZoneX Light 2 Enabled	• Disabled • Enabled	-	Disabled	Light detected in sensor channel 2 trips the zone.
ZoneX Light 3 Enabled	• Disabled • Enabled	-	Disabled	Light detected in sensor channel 3 trips the zone.
ZoneX Light 4 Enabled	• Disabled • Enabled	-	Disabled	Light detected in sensor channel 4 trips the zone.
ZoneX DI Enabled	• Disabled • Light In • Current In	-	Disabled	Arc protection option card digital input function selection. "Light In" mode trips the zone when digital input is active. In "Current In" mode digital input must be active at the same time as any of the sensor channels for the zone to trip.

Read-only parameters

The function's *Info* page displays useful, real-time information on the state of the protection function. It is accessed either through the device's HMI display, or through the setting tool software when it is connected to the device and its Live Edit mode is active.

Table. 4.4.34 - 283. Information displayed by the function.

Name	Range	Description
I/I0 Arc> LN behaviour	• On • Blocked • Test • Test/Blocked • Off	Displays the mode of ARC block. This parameter is visible only when *Allow setting of individual LN mode* is enabled in *General* menu.
I/I0 Arc> condition	• Z1 Trip • Z1 Blocked • Z2 Trip • Z2 Blocked • Z3 Trip • Z3 Blocked • Z4 Trip • Z4 Blocked	Displays status of the protection function.

© Arcteq Relays Ltd
IM00021

Sensor status	• Ph Curr Blocked • Ph Curr Start • Res Curr Blocked • Res Curr Start • Channel1 Light • Channel1 Pressure • Channel2 Light • Channel2 Pressure • Channel3 Light • Channel3 Pressure • Channel4 Light • Channel4 Pressure • Digital input • I/I0 Arc> Sensor 1 Fault • I/I0 Arc> Sensor 2 Fault • I/I0 Arc> Sensor 3 Fault • I/I0 Arc> Sensor 4 Fault • I/I0 Arc> I/O-unit Fault	Displays the general status of sensors.

Function blocking

The blocking signal is evaluated at the start of each program cycle. The blocking signals are connected to the function's dedicated input, which can be configured in the *IO → Blocking Input Control* tab of the function.

- When the pick-up element activates and the blocking signal is not active, a TRIP signal is generated.
- When the pick-up element activates and the blocking input signal is active, a BLOCKED signal is generated, and the function does not process the event further.
- When TRIP signal is already active and the blocking input signal becomes active, the TRIP signal is reset and BLOCKED signal is generated.

The blocking signal needs to reach the device minimum of 5 ms before the set operating delay has passed in order for the blocking to activate in time.

Events and registers

The arc fault protection function (abbreviated "ARC" in event block names) generates events and registers from the status changes in the events listed below. The user can select which event messages are stored in the main event buffer: ON, OFF, or both. The events triggered by the function are recorded with a time stamp.

The function's outputs can be used for direct I/O controlling and user logic programming. The function also provides a resettable cumulative counter for the events.

Table. 4.4.34 - 284. Event messages.

Event block name	Event names
ARC1	Zone 1...4 Trip ON/OFF
ARC1	Zone 1...4 Block ON/OFF
ARC1	Phase current Blocked ON/OFF
ARC1	Phase current Start ON/OFF
ARC1	Residual current Blocked ON/OFF
ARC1	Residual current Start ON/OFF
ARC1	Channel 1...4 Light ON/OFF
ARC1	DI Signal ON/OFF
ARC1	I/I0 Arc> Sensor 1...4 Fault ON/OFF
ARC1	I/I0 Arc> sub-unit count error ON/OFF

The function registers its operation into the last twelve (12) time-stamped registers. The table below presents the structure of the function's register content.

Table. 4.4.34 - 285. Register content.

Register	Description
Date and time	dd.mm.yyyy hh:mm:ss.mss
Event	Event name
Phase A current	Trip current
Phase B current	
Phase C current	
Residual current	
Active sensors	1...4
Setting group in use	Setting group 1...8 active

4.5 Control functions

4.5.1 Common signals

Common signals function has all protection function start and trip signals internally connected to Common START and TRIP output signals. When any of the activated protection functions generate a START or a TRIP signal, Common signals function will also generate the same signal.

© Arcteq Relays Ltd
IM00021

General settings

The following general settings define the general behavior of the function. These settings are static i.e. it is not possible to change them by editing the setting group.

Table. 4.5.1 - 286. General settings of the function.

Name	Range	Default	Description
Common force status to	• Normal • Start • Trip	Normal	Force the status of the function. Visible only when *Enable stage forcing* parameter is enabled in *General* menu.

Common signals function has all START and TRIP signals of protection functions internally connected to Common START and TRIP output signals. But it is also possible to assign extra signals to activate Common START and TRIP.

Table. 4.5.1 - 287. Common signals extra inputs.

Name	Description
Common Start In	Assign extra signals to activate common START signal. Please note that all protection function START signals are already assigned internally to Common START.
Common Trip In	Assign extra signals to activate common TRIP signal. Please note that all protection function TRIP signals are already assigned internally to Common TRIP.

Read-only parameters

The function's *Info* page displays useful, real-time information on the state of the protection function. It is accessed either through the device's HMI display, or through the setting tool software when it is connected to the device and its Live Edit mode is active.

Table. 4.5.1 - 288. Information displayed by the function.

Name	Range	Description
Common signals condition	• Normal • Start • Trip	Displays status of the function.

Function blocking

Common signals function itself doesn't have blocking input signals. Blocking of tripping should be done in each protection function settings.

Events

The common signals function (abbreviated "GNSIG" in event block names) generates events from the status changes in the events listed below. The user can select which event messages are stored in the main event buffer: ON, OFF, or both.

The function's outputs can be used for direct I/O controlling and user logic programming. The function also provides a resettable cumulative counter for the START and TRIP events.

The events triggered by the function are recorded with a time stamp.

Table. 4.5.1 - 289. Event messages.

Event block name	Event names
GNSIG	Common Start ON/OFF
GNSIG	Common Trip ON/OFF

4.5.2 Setting group selection

All device types support up to eight (8) separate setting groups. The Setting group selection function block controls the availability and selection of the setting groups. By default, only Setting group 1 (SG1) is active and therefore the selection logic is idle. When more than one setting group is enabled, the setting group selector logic takes control of the setting group activations based on the logic and conditions the user has programmed.

Figure. 4.5.2 - 169. Simplified function block diagram of the setting group selection function.

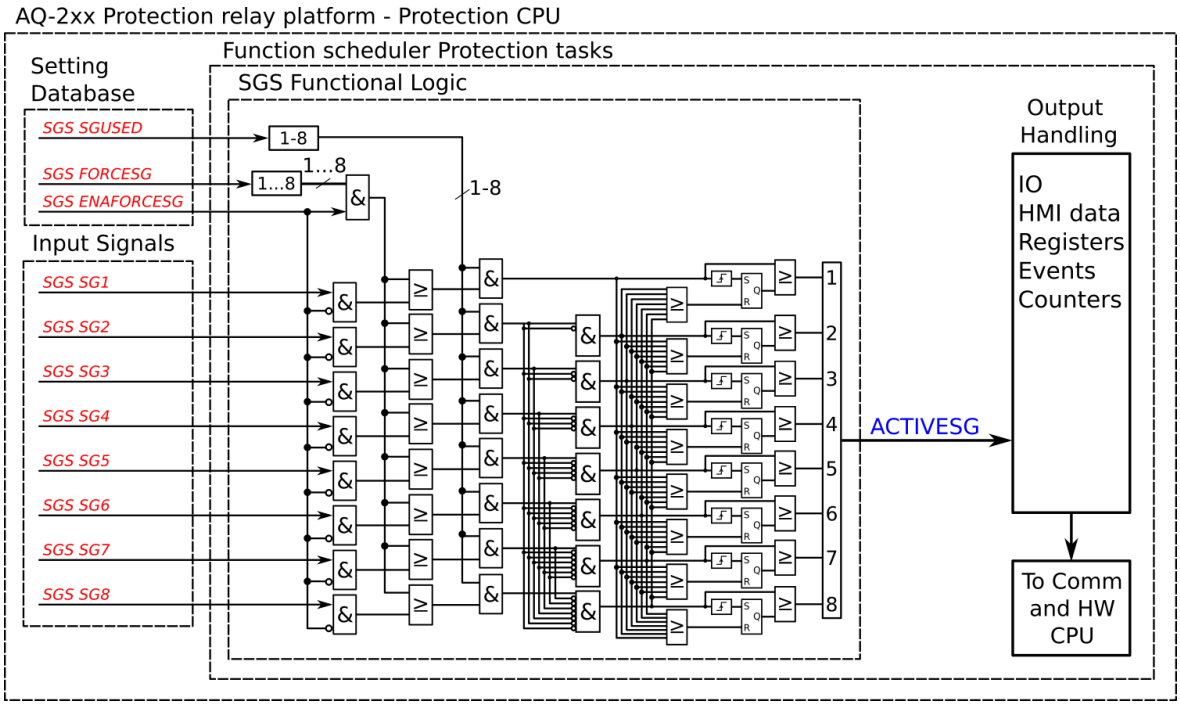

Setting group selection can be applied to each of the setting groups individually by activating one of the various internal logic inputs and connected digital inputs. The user can also force any of the setting groups on when the "Force SG change" setting is enabled by giving the wanted quantity of setting groups as a number in the communication bus or in the local HMI, or by selecting the wanted setting group from *Control → Setting groups*. When the forcing parameter is enabled, the automatic control of the local device is overridden and the full control of the setting groups is given to the user until the "Force SG change" is disabled again.

Setting groups can be controlled either by pulses or by signal levels. The setting group controller block gives setting groups priority values for situations when more than one setting group is controlled at the same time: the request from a higher-priority setting group is taken into use.

© Arcteq Relays Ltd
IM00021

Setting groups follow a hierarchy in which setting group 1 has the highest priority, setting group 2 has second highest priority etc. If a static activation signal is given for two setting groups, the setting group with higher priority will be active. If setting groups are controlled by pulses, the setting group activated by pulse will stay active until another setting groups receives and activation signal.

Figure. 4.5.2 - 170. Example sequences of group changing (control with pulse only, or with both pulses and static signals).

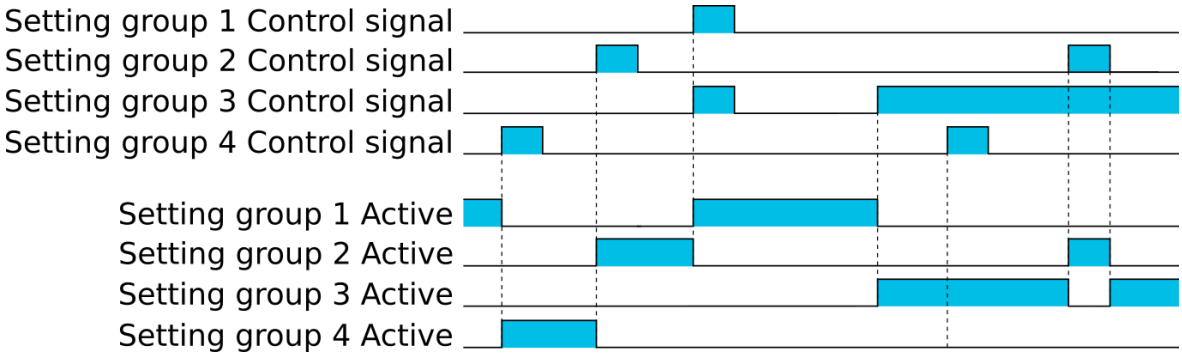

Settings and signals

The settings of the setting group control function include the active setting group selection, the forced setting group selection, the enabling (or disabling) of the forced change, the selection of the number of active setting groups in the application, as well as the selection of the setting group changed remotely. If the setting group is forced to change, the corresponding setting group must be enabled and the force change must be enabled. Then, the setting group can be set from communications or from HMI to any available group. If the setting group control is applied with static signals right after the "Force SG" parameter is released, the application takes control of the setting group selection.

Table. 4.5.2 - 290. Settings of the setting group selection function.

Name	Range	Default	Description
Active setting group	• SG1 • SG2 • SG3 • SG4 • SG5 • SG6 • SG7 • SG8	SG1	Displays which setting group is active.
Force setting group	• None • SG1 • SG2 • SG3 • SG4 • SG5 • SG6 • SG7 • SG8	None	The selection of the overriding setting group. After "Force SG change" is enabled, any of the configured setting groups in the device can be overriden. This control is always based on the pulse operating mode. It also requires that the selected setting group is specifically controlled to ON after "Force SG" is disabled. If there are no other controls, the last set setting group remains active.
Force setting group change	• Disabled • Enabled	Disabled	The selection of whether the setting group forcing is enabled or disabled. This setting has to be active before the setting group can be changed remotely or from a local HMI. This parameter overrides the local control of the setting groups and it remains on until the user disables it.

Name	Range	Default	Description
Used setting groups	• SG1 • SG1...2 • SG1...3 • SG1...4 • SG1...5 • SG1...6 • SG1...7 • SG1...8	SG1	The selection of the activated setting groups in the application. Newly-enabled setting groups use default parameter values.
Remote setting group change	• None • SG1 • SG2 • SG3 • SG4 • SG5 • SG6 • SG7 • SG8	None	This parameter can be controlled through SCADA to change the setting group remotely. Please note that if a higher priority setting group is being controlled by a signal, a lower priority setting group cannot be activated with this parameter.

Table. 4.5.2 - 291. Signals of the setting group selection function.

Name	Description
Setting group 1	The selection of Setting group 1 ("SG1"). Has the highest priority input in setting group control. Can be controlled with pulses or static signals. If static signal control is applied, no other SG requests will be processed.
Setting group 2	The selection of Setting group 2 ("SG2"). Has the second highest priority input in setting group control. Can be controlled with pulses or static signals. If static signal control is applied, no requests with a lower priority than SG1 will be processed.
Setting group 3	The selection of Setting group 3 ("SG3"). Has the third highest priority input in setting group control. Can be controlled with pulses or static signals. If static signal control is applied, no requests with a lower priority than SG1 and SG2 will be processed.
Setting group 4	The selection of Setting group 4 ("SG4"). Has the fourth highest priority input in setting group control. Can be controlled with pulses or static signals. If static signal control is applied, no requests with a lower priority than SG1, SG2 and SG3 will be processed.
Setting group 5	The selection of Setting group 5 ("SG5"). Has the fourth lowest priority input in setting group control. Can be controlled with pulses or static signals. If static signal control is applied, SG6, SG7 and SG8 requests will not be processed.
Setting group 6	The selection of Setting group 6 ("SG6"). Has the third lowest priority input in setting group control. Can be controlled with pulses or static signals. If static signal control is applied, SG7 and SG8 requests will not be processed.
Setting group 7	The selection of Setting group 7 ("SG7"). Has the second lowest priority input in setting group control. Can be controlled with pulses or static signals. If static signal control is applied, only SG8 requests will not be processed.
Setting group 8	The selection of Setting group 8 ("SG8"). Has the lowest priority input in setting group control. Can be controlled with pulses or static signals. If static signal control is applied, all other SG requests will be processed regardless of the signal status of this setting group.

© Arcteq Relays Ltd
IM00021

Events

The setting group selection function block (abbreviated "SGS" in event block names) generates events from the status changes in the events listed below. The user can select which event messages are stored in the main event buffer: ON, OFF, or both. The events triggered by the function are recorded with a time stamp.

Table. 4.5.2 - 292. Event messages.

Event block name	Event names
SGS	SG2...8 Enabled/Disabled
SGS	SG1...8 Request ON/OFF
SGS	Remote Change SG Request ON/OFF
SGS	Local Change SG Request ON/OFF
SGS	Force Change SG ON/OFF
SGS	SG Request Fail Not configured SG ON/OFF
SGS	Force Request Fail Force ON/OFF
SGS	SG Req. Fail Lower priority Request ON/OFF
SGS	SG1...8 Active ON/OFF

4.5.3 Object control and monitoring

The object control and monitoring function takes care of both for circuit breakers and disconnectors. The monitoring and controlling are based on the statuses of the device's configured digital inputs and outputs. The number of controllable and monitored objects in each device depends on the device type and amount of digital inputs. One controllable object requires a minimum of two (2) output contacts. The status monitoring of one monitored object usually requires two (2) digital inputs. Alternatively, object status monitoring can be performed with a single digital input: the input's active state and its zero state (switched to 1 with a NOT gate in the Logic editor).

An object can be controlled manually or automatically. Manual control can be done by local control, or by remote control. Local manual control can be done by devices front panel (HMI) or by external push buttons connected to devices digital inputs. Manual remote control can be done through one of the various communication protocols available (Modbus, IEC101/103/104 etc.). The function supports the modes "Direct control" and "Select before execute" while controlled remotely. Automatic controlling can be done with functions like auto-reclosing function (ANSI 79).

The main outputs of the function are the OBJECT OPEN and OBJECT CLOSE control signals. Additionally, the function reports the monitored object's status and applied operations. The setting parameters are static inputs for the function, which can only be changed by the user in the function's setup phase.

Figure. 4.5.3 - 171. Simplified function block diagram of the object control and monitoring function.

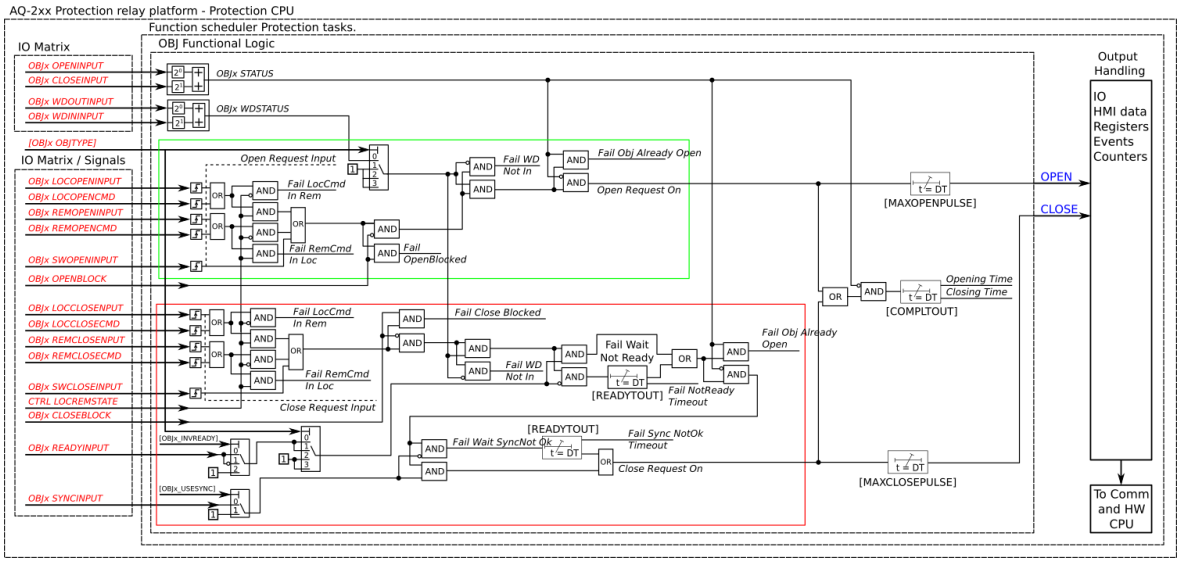

Settings

The following parameters help the user to define the object. The operation of the function varies based on these settings and the selected object type. The selected object type determines how much control is needed and which setting parameters are required to meet those needs.

Table. 4.5.3 - 293. Object settings and status parameters.

Name	Range	Default	Description
Local/Remote status	• Local • Remote	Remote	Displays the status of the device's "local/remote" switch. Local controls cannot override the open and close commands while device is in "Remote" status. The remote controls cannot override the open and close commands while device is in "Local" status.
Object status force to	• Normal • Openreq On • Closereq On • Opensignal On • Closesignal On • WaitNoRdy On • WaitNoSnc On • NotrdyFail On • NosyncFail On • Opentout On • Clotout On • OpenreqUSR On • CloreqUSR On	Normal	Force the status of the function. Visible only when *Enable stage forcing* parameter is enabled in *General* menu.
OBJ LN mode	• On • Blocked • Test • Test/Blocked • Off	On	Set mode of OBJ block. This parameter is visible only when *Allow setting of individual LN mode* is enabled in *General* menu.

© Arcteq Relays Ltd
IM00021

Name	Range	Default	Description
OBJ LN behaviour	• On • Blocked • Test • Test/Blocked • Off	-	Displays the mode of OBJ block. This parameter is visible only when *Allow setting of individual LN mode* is enabled in *General* menu.
Object name	-	Objectx	The user-set name of the object, at maximum 32 characters long.
Object type	• Withdrawable circuit breaker • Circuit breaker • Disconnector (MC) • Disconnector (GND)	Circuit breaker	The selection of the object type. This selection defines the number of required digital inputs for the monitored object. This affects the symbol displayed in the HMI and the monitoring of the circuit breaker. It also affects whether the withdrawable cart is in/out status is monitored. See the next table ("Object types") for a more detailed look at which functionalities each of the object types have.
Objectx Breaker status	• Intermediate • Open • Closed • Bad	-	Displays the status of breaker. Intermediate is displayed when neither of the status signals (open or close) are active. Bad status is displayed when both status signals (open and close) are active.
Objectx Withdraw status	• WDIntermediate • WDCartOut • WDCart In • WDBad • Not in use	-	Displays the status of circuit breaker cart. WDIntermediate is displayed when neither of the status signals (in or out) are active. WDBad status is displayed when both status signals (in and out) are active. If the selected object type is not set to "Withdrawable circuit breaker", this setting displays the "No in use" option.
Additional status information	• Open Blocked • Open Allowed • Close Blocked • Close Allowed • Object Ready • Object Not Ready • Sync Ok • Sync Not Ok	-	Displays additional information about the status of the object.
Use Synchrocheck	• Not in use • Synchrocheck in use	Not in use	Selects whether the "Synchrocheck" condition is in use for the circuit breaker close command. If "In use" is selected the input chosen to "Sync.check status in" has to be active to be able to close circuit breaker. Synchrocheck status can be either an internal signal generated by synchrocheck function or digital input activation with an external synchrocheck device.
Use Object ready	• Ready High • Ready Low • Not in use	Not in use	Selects whether the "Object ready" condition is in use for the circuit breaker close command. If in use the signal connected to "Object ready status In" has to be high or low to be able to close the breaker (depending on "Ready High or Low" selection).
Open requests	$0…2^{32}–1$	-	Displays the number of successful "Open" requests.
Close requests	$0…2^{32}–1$	-	Displays the number of successful "Close" requests.

Name	Range	Default	Description
Open requests failed	$0…2^{32}–1$	-	Displays the number of failed "Open" requests.
Close requests failed	$0…2^{32}–1$	-	Displays the number of failed "Close" requests.
Clear statistics	• - • Clear	-	Clears the request statistics, setting them back to zero (0). Automatically returns to "-" after the clearing is finished.

Table. 4.5.3 - 294. Object types.

Name	Functionalities	Description
Withdrawable circuit breaker	Breaker cart position Circuit breaker position Circuit breaker control Object ready check before closing breaker Synchrochecking before closing breaker Interlocks	The monitor and control configuration of the withdrawable circuit breaker.
Circuit breaker	Position indication Control Object ready check before closing breaker Synchrochecking before closing breaker Interlocks	The monitor and control configuration of the circuit breaker.
Disconnector (MC)	Position indication Control	The position monitoring and control of the disconnector.
Disconnector (GND)	Position indication	The position indication of the earth switch.

Table. 4.5.3 - 295. I/O.

Signal	Range	Description
Objectx Open Status In	Digital input or other logical signal selected by the user (SWx)	A link to a physical digital input. The monitored object's OPEN status. "1" refers to the active open state of the monitored object.
Objectx Close Status In		A link to a physical digital input. The monitored object's CLOSE status. "1" refers to the active close state of the monitored object.
Withdrw.CartIn.Status In		A link to a physical digital input. The monitored withdrawable object's position is IN. "1" means that the withdrawable object cart is in.
Withdrw.CartOut.Status In		A link to a physical digital input. The monitored withdrawable object's position is OUT. "1" means that the withdrawable object cart is pulled out.

© Arcteq Relays Ltd
IM00021

Signal	Range	Description
Objectx Ready status In		A link to a physical digital input. Indicates that status of the monitored object. "1" means that the object is ready and the spring is charged for a close command.
Sync.Check status In		A link to a physical digital input or a synchrocheck function. "1" means that the synchrocheck conditions are met and the object can be closed.
Objectx Open Command	OUT1…OUTx	The physical "Open" command pulse to the device's output relay.
Objectx Close Command		The physical "Close" command pulse to the device's output relay.

Table. 4.5.3 - 296. Operation settings.

Name	Range	Step	Default	Description
Breaker traverse time	0.02…500.00 s	0.02 s	0.2 s	Determines the maximum time between open and close statuses when the breaker switches. If this set time is exceeded and both open and closed status inputs are active, the status "Bad" is activated in the "Objectx Breaker status" setting. If neither of the status inputs are active after this delay, the status "Intermediate" is activated.
Sync wait timeout	0.02…500.00 s	0.02 s	0.2 s	If synchrocheck is used, the object will wait for a "synchrocheck ok" signal before giving the closing command. This parameter will cancel the command if synchronization is not achieved on time.
Maximum Close command pulse length	0.02…500.00 s	0.02 s	0.2 s	Determines the maximum length for a Close pulse from the output relay to the controlled object. If the object operates faster than this set time, the control pulse is reset and a status change is detected.
Maximum Open command pulse length	0.02…500.00 s	0.02 s	0.2 s	Determines the maximum length for a Open pulse from the output relay to the controlled object. If the object operates faster than this set time, the control pulse is reset and a status change is detected.
Control termination timeout	0.02…500.00 s	0.02 s	10 s	Determines the control pulse termination timeout. If the object has not changed it status in this given time the function will issue error event and the control is ended. This parameter is common for both open and close commands.
Final trip pulse length	0.00…500.00 s	0.02 s	0.2 s	Determines the length of the final trip pulse length. When the object has executed the final trip, this signal activates. If set to 0 s, the signal is continuous. If auto-recloser function controls the object, "final trip" signal is activated only when there are no automatic reclosings expected after opening the breaker.

Table. 4.5.3 - 297. Control settings (DI and Application).

Signal	Range	Description
Access level for MIMIC control	• User • Operator • Configurator • Super user	Defines what level of access is required for MIMIC control. The default is the "Configurator" level.
Objectx LOCAL Close control input	Digital input or other logical signal selected by the user	The local Close command from a physical digital input (e.g. a push button).
Objectx LOCAL Open control input		The local Open command from a physical digital input (e.g. a push button).
Objectx REMOTE Close control input		The remote Close command from a physical digital input (e.g. RTU).
Objectx REMOTE Open control input		The remote Open command from a physical digital input (e.g. RTU).
Objectx Application Close		The Close command from the application. Can be any logical signal.
Objectx Application Open		The Close command from the application. Can be any logical signal.

Blocking and interlocking

The interlocking and blocking conditions can be set for each controllable object, with Open and Close set separately. Blocking and interlocking can be based on any of the following: other object statuses, a software function or a digital input.

In order for the blocking signal to be received on time, it has to reach the function 5 ms before the control command.

Trip circuit supervision

Trip circuit supervision monitors the wiring from auxiliary power supply, through the device's digital output, and all the way to the open coil of the breaker. It is recommended to supervise the health of the trip circuit when breaker is closed.

The figure below presents an application scheme for trip circuit supervision with one digital input and a non-latched trip output. With this connection the current keeps flowing to the open coil of the breaker via the breaker's closing auxiliary contacts (52b) even after the circuit breaker is opened. This requires a resistor which reduces the current: this way the coil is not energized and the relay output does not need to cut off the coil's inductive current.

© Arcteq Relays Ltd

Figure. 4.5.3 - 172. Trip circuit supervision with one DI and one non-latched trip output.

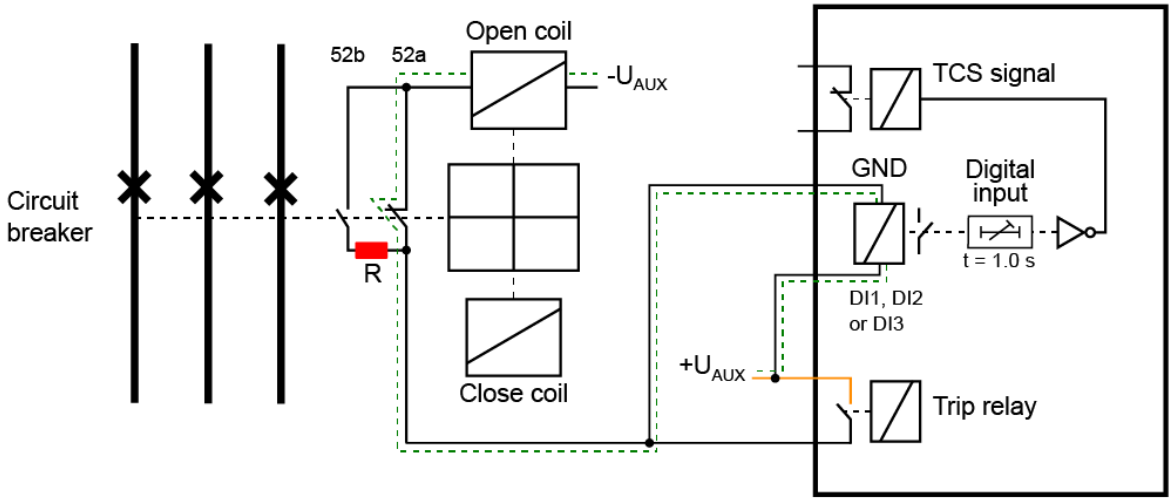

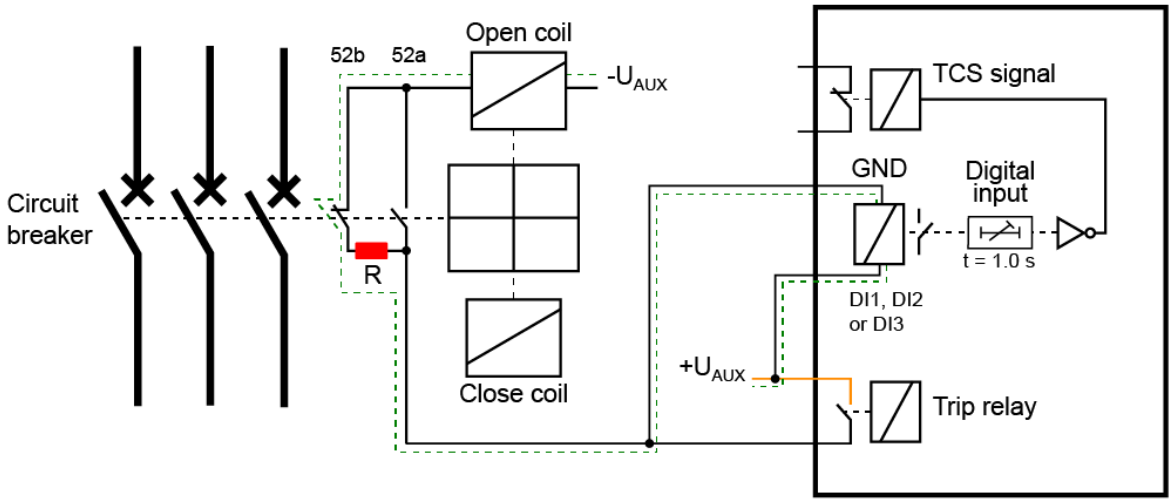

Note that the digital input that monitors the circuit is normally closed, and the same applies to the alarm relay if one is used. For monitoring and especially trip circuit supervision purposes it is recommended to use a normally closed contact to confirm the wiring's condition. An active digital input generates a less than 2 mA current to the circuit, which is usually small enough not to make the breaker's open coil operate.

When the trip relay is controlled and the circuit breaker is opening, the digital input is shorted by the trip contact as long as the breaker opens. Normally, this takes about 100 ms if the relay is non-latched. A one second activation delay should, therefore, be added to the digital input. An activation delay that is slightly longer than the circuit breaker's operations time should be enough. When circuit breaker failure protection (CBFP) is used, adding its operation time to the digital input activation time is useful. The whole digital input activation time is, therefore, $t_{DI} = t_{CB} + t_{IEDrelease} + t_{CBFP}$.

Figure. 4.5.3 - 173. Trip circuit supervision with high-speed output. High-speed outputs have an internal input for trip circuit supervision.

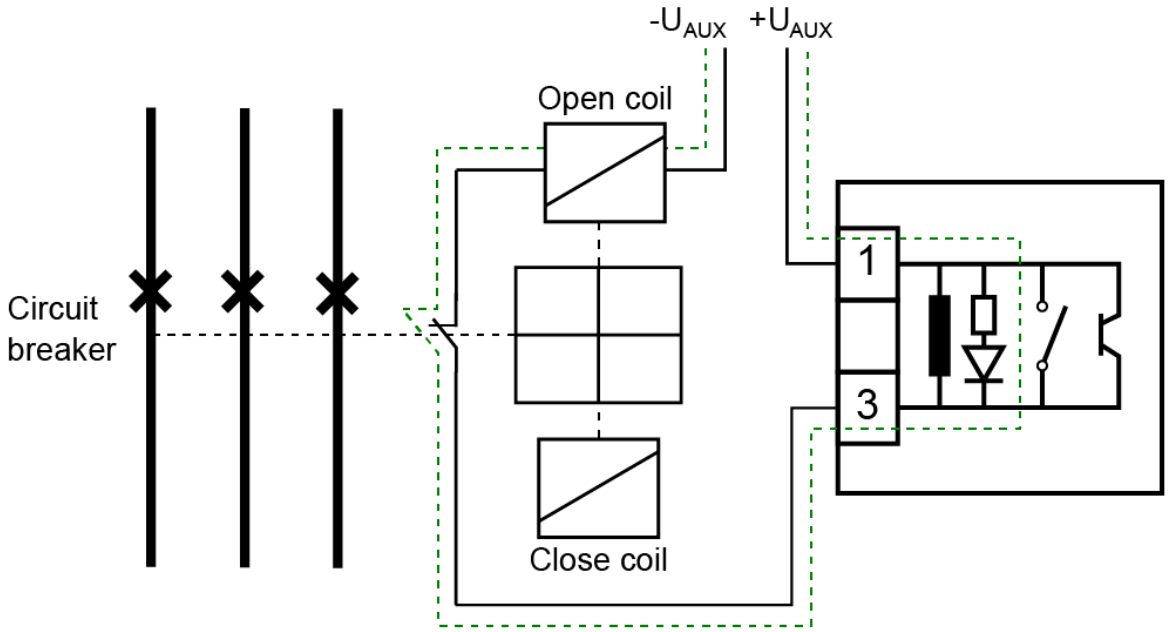

Table. 4.5.3 - 298. Trip circuit supervision settings (Control → Objects → Object X → APP CONTR → Condition monitoring).

Name	Range	Default	Description
ObjectX Trip circuit supervision	• Disabled • Enabled	Disabled	Enables the trip circuit supervision function.
ObjectX TCS Alarm activation delay	0.02…500.00 s	0.20 s	Time delay before TCS alarm is activated.
Object1 TCS input	-	-	Defines the supervised digital input, high-speed output or other signal.

Object condition monitoring (circuit breaker wear monitor)

Each object has integrated circuit breaker wear monitor. The circuit breaker wear function is used for monitoring the circuit breaker's lifetime and its maintenance needs caused by interrupting currents and mechanical wear. The function uses the circuit breaker's manufacturer-supplied data for the breaker operating cycles in relation to the interrupted current magnitudes.

© Arcteq Relays Ltd
IM00021

Figure. 4.5.3 - 174. Example of the circuit breaker interrupting life operations. Points 1 and 2 are user settable.

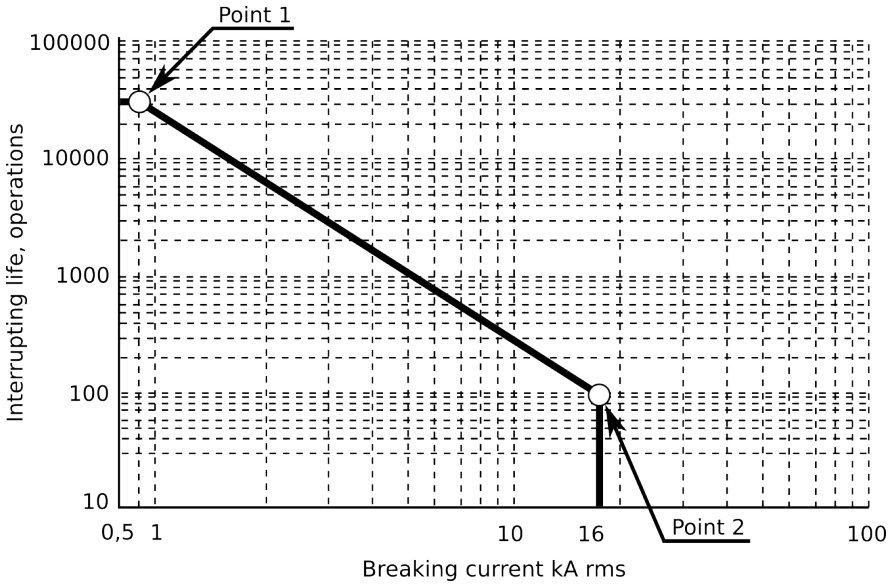

The function is triggered from the circuit breaker's "Open" command output and it monitors the three-phase current values in both the tripping moment and the normal breaker opening moment. The maximum value of interrupting life operations for each phase is calculated from these currents. The value is cumulatively deducted from the starting operations starting value. The user can set up two separate alarm levels, which are activated when the value of interrupting life operations is below the setting limit. The "Trip contact" setting defines the output that triggers the current monitoring at the breaker's "Open" command. The function's outputs are ALARM 1 and ALARM 2 signals which can be used for direct I/O controlling and user logic programming.

Figure above indicates that the circuit breaker is capable of 30 000 operations at its rated operating current of 630 A, and 100 operations at its rated fault current of 16 kA. Based on this, a single operation at 5 kA corresponds to 30 000/1000 = 30 operations at the rated current. If the breaker had 20 000 operations of life remaining before this trip, then one 5 kA operation reduces its remaining life by 30 operations. Therefore, after the 5 kA trip, the breaker has 19 970 rated-current operations left.

The function block uses analog current measurement values and always uses the RMS magnitude of the current measurement input.

Table. 4.5.3 - 299. Measurement inputs of the circuit breaker wear function.

Signal	Description
IL1RMS	RMS measurement of phase L1 (A) current
IL2RMS	RMS measurement of phase L2 (B) current
IL3RMS	RMS measurement of phase L3 (C) current

Condition monitoring parameters can be found from *Control → Objects → Object X → APP CONTR → Condition Monitoring*.

Table. 4.5.3 - 300. Breaker supervision settings and status indications.

Name	Range	Default	Description
Condition monitoring	• Disabled • Enabled	Disabled	Enables the breaker condition monitoring function.
Monitoring CT side	• CT1 • CT2	CT1	Defines which current measurement module is used by the function.
Condition monitor status	• Normal • Alarm1 On • Alarm2 On	-	Displays the status of the monitor.
Open operations	0…4 294 967 295	-	Displays the total number of breaker open operations.
Operation time open	0…4 294 967 295 ms	-	Displays the latest breaker opening time.
Close operations	0…4 294 967 295	-	Displays the total number of breaker close operations.
Operation time close	0…4 294 967 295 ms	-	Displays the latest breaker closing time.
L1 Operations Left	0…4 294 967 295	-	Displays the number of operations left in each phase.
L2 Operations Left			
L3 Operations Left			
L1 Cumulative abrasion	0…4 294 967 295 kA^2t	-	Displays the amount of abrasion in each phase. See contact abraction calculation formula below.
L2 Cumulative abrasion			
L3 Cumulative abrasion			
Maximum cumulative abrasion	0…4 294 967 295 kA^2t	-	Displays the value of the phase with most cumulated abrasion.
Object Cumulated operations	0…4 294 967 295	-	Displays the total number of operations.
Clear condition monitoring statistics	• - • Clear	-	Clears the operation statistics.
Operations with Current 1 Value allowed	0…200 000	50000	Defines the number of operations with lower current values. See figure above.
Current 1 Value	0.00…100.00 kA	1.00 kA	Defines the lower current turnpoint. See figure above.
Operations with Current 2 Value allowed	0...200 000	100	Defines number of operations with higher current values. See figure above.
Current 2 Value	0.00…100.00 kA	20.00 kA	Defines the higher current turnpoint. See figure above.

© Arcteq Relays Ltd
IM00021

Name	Range	Default	Description
Condition Alarm 1 Enable	• Disabled • Enabled	Disabled	Enables Alarm 1.
Condition Alarm 1 when operations less than	0…200 000	1000	When the number of operations left is less than value set here, Alarm 1 will activate.
Abrasion sum threshold alarm	0…1 000 000 kA^2t	200 000 kA^2t	When the cumulated abrasion exceeds this value, contact abrasion alarm signal is activated
Condition Alarm 2 Enable	• Disabled • Enabled	Disabled	Enables Alarm 2.
Condition Alarm 2 when operations less than	0...200 000	100	When the number of operations left is less than value set here, Alarm 2 will activate.
Abrasion sum threshold warning	0…1 000 000 kA^2t	200 000 kA^2t	When the cumulated abrasion exceeds this value, contact abrasion warning signal is activated

Contact abrasion is often approximated as being proportional to the arc energy during interruption. AQ-200 series devices calculate contact abrasion for each breaker opening using the following formula:

Figure. 4.5.3 - 175. Contact abrasion calculation formula.

$$Contact\ abrasion = I^2 * t$$

Where:

- I is the measured current at the moment the device receives the open command.
- t is the measured opening time of the breaker.

The breaker opening time starts when the open command is issued and ends when the device receives the breaker open status input. For the abrasion calculation to start from a fault-initiated trip, the TRIP signals must be connected to the "Object application open" input, instead of the matrix.

If the fault current at the time of starting the circuit breaker opening is 5 kA and the total time difference between the open command and the circuit breaker open status is 100 ms, the contact abrasion for that circuit breaking will be calculated as follows:

Figure. 4.5.3 - 176. Contact abrasion example calculation.

$$Contact\ abrasion = 5kA^2 * 0{,}1s = 2{,}5kA^2 * s$$

The total abrasion cumulates each time the object is opened. Abrasion is calculated separately for each phase.

- When the cumulative abrasion of any phase exceeds the "Object abrasion sum threshold alarm" setting, the "Object contact abrasion alarm" output activates.
- When the cumulative abrasion of any phase exceeds the "Object abrasion sum threshold warning" setting, the "Object contact abrasion warning" output activates.

Events and registers

The object control and monitoring function (abbreviated "OBJ" in event block names) generates events and registers from the status changes in the events listed below. The user can select which event messages are stored in the main event buffer: ON, OFF, or both. The events triggered by the function are recorded with a time stamp.

The function also provides a resettable cumulative counter for OPEN, CLOSE, OPEN FAILED, and CLOSE FAILED events.

Table. 4.5.3 - 301. Event messages of the OBJ function.

Event block name	Description
OBJX	Object Intermediate
OBJX	Object Open
OBJX	Object Close
OBJX	Object Bad
OBJX	WD Intermediate
OBJX	WD Out
OBJX	WD in
OBJX	WD Bad
OBJX	Open Request ON/OFF
OBJX	Open Command ON/OFF
OBJX	Close Request ON/OFF
OBJX	Close Command ON/OFF
OBJX	Open Blocked ON/OFF
OBJX	Close Blocked ON/OFF
OBJX	Object Ready
OBJX	Object Not Ready
OBJX	Sync Ok
OBJX	Sync Not Ok
OBJX	Open Command Fail
OBJX	Close Command Fail
OBJX	Final trip ON/OFF
OBJX	Contact Abrasion Alarm ON/OFF
OBJX	Switch Operating Time Exceeded ON/OFF
OBJX	XCBR Loc ON/OFF

© Arcteq Relays Ltd
IM00021

Event block name	Description
OBJX	XSWI Loc ON/OFF
OBJX	OBJX Cond monitoring alarm 1 ON/OFF
OBJX	OBJX Cond monitoring alarm 2 ON/OFF
OBJX	OBJX Trip Circuit Supervision ON/OFF

The function registers its operation into the last twelve (12) time-stamped registers. The table below presents the structure of the function's register content.

Table. 4.5.3 - 302. Register content.

Name	Description
Date and time	dd.mm.yyyy hh:mm:ss.mss
Event	Event name
Recorded Object opening time	Time difference between the object receiving an "Open" command and the object receiving the "Open" status.
Recorded Object closing time	Time difference between the object receiving a "Close" command and object receiving the "Closed" status.
Object status	The status of the object.
WD status	The status of the withdrawable circuit breaker.
Open fail	The cause of an "Open" command's failure.
Close fail	The cause of a "Close" command's failure.
Open command	The source of an "Open" command.
Close command	The source of an "Open" command.
General status	The general status of the function.

4.5.4 Indicator object monitoring

The indicator object monitoring function takes care of the status monitoring of disconnectors. The function's sole purpose is indication and does not therefore have any control functionality. To control circuit breakers and/or disconnectors, please use the Object control and monitoring function. The monitoring is based on the statuses of the configured device's digital inputs. The number of monitored indicators in a device depends on the device type and available inputs. The status monitoring of one monitored object usually requires two (2) digital inputs. Alternatively, object status monitoring can be performed with a single digital input: the input's active state and its zero state (switched to 1 with a NOT gate in the Logic editor).

The outputs of the function are the monitored indicator statuses (Open, Close, Intermediate and Bad). The setting parameters are static inputs for the function, which can only be changed by the use in the function's setup phase.

The inputs of the function are the binary status indications. The function generates general time stamped ON/OFF events to the common event buffer from each of the following signals: OPEN, CLOSE, BAD and INTERMEDIATE event signals. The time stamp resolution is 1 ms.

Settings

Function uses available hardware and software digital signal statuses. These input signals are also setting parameters for the function.

Table. 4.5.4 - 303. Indicator status.

Name	Range	Default	Description
Indicator name ("Ind. Name")	-	IndX	The user-set name of the object, at maximum 32 characters long.
IndicatorX Object status ("Ind.X Object Status")	• Intermediate • Open • Closed • Bad	-	Displays the status of the indicator object. Intermediate status is displayed when neither of the status conditions (open or close) are active. Bad status is displayed when both of the status conditions (open and close) are active.

Table. 4.5.4 - 304. Indicator I/O.

Signal	Range	Description
IndicatorX Open input ("Ind.X Open Status In")	Digital input or other logical signal selected by the user (SWx)	A link to a physical digital input. The monitored indicator's OPEN status. "1" refers to the active "Open" state of the monitored indicator.
IndicatorX Close input ("Ind.X Close Status In")	Digital input or other logical signal selected by the user (SWx)	A link to a physical digital input. The monitored indicator's CLOSE status. "1" refers to the active "Close" state of the monitored indicator.

Events

The indicator object monitoring function (abbreviated "CIN" in event block names) generates events from the status changes in the events listed below. The user can select which event messages are stored in the main event buffer: ON, OFF, or both. The events triggered by the function are recorded with a time stamp.

Table. 4.5.4 - 305. Event messages (instances 1-10).

Event block name	Event names
CIN1...10	Intermediate
CIN1...10	Open
CIN1...10	Close
CIN1...10	Bad

© Arcteq Relays Ltd
IM00021

4.5.5 Milliampere output control

The milliamp current loop is the prevailing process control signal in many industries. It is an ideal method of transferring process information because a current does not change as it travels from a transmitter to a receiver. It is also much more simple and cost-effective.

The benefits of 4...20 mA loops:

- the dominant standard in many industries
- the simplest option to connect and configure
- uses less wiring and connections than other signals, thus greatly reducing initial setup costs
- good for travelling long distances, as current does not degrade over long connections like voltage does
- less sensitive to background electrical noise
- detects a fault in the system incredibly easily since 4 mA is equal to 0 % output.

Milliampere (mA) outputs

The device supports up to two (2) independent mA option cards. Each card has four (4) mA output channels and one (1) mA input channel. If the device has an mA option card, enable mA outputs at *Control → Device IO → mA outputs*. The outputs are activated in groups of two: channels 1 and 2 are activated together, as are channels 3 and 4.

Table. 4.5.5 - 306. Main settings (output channels).

Name		Range	Default	Description
mA option card 1	Enable mA output channels 1 and 2	• Disabled • Enabled	Disabled	Enables and disables the outputs of the mA output card 1.
	Enable mA output channels 3 and 4			
mA option card 2	Enable mA output channels 5 and 6	• Disabled • Enabled	Disabled	Enables and disables the outputs of the mA output card 2.
	Enable mA output channels 7 and 8			

Table. 4.5.5 - 307. Settings for mA output channels.

Name	Range	Step	Default	Description
Enable mA output channel	• Disabled • Enabled	-	Disabled	Enables and disables the selected mA output channel. If the channel is disabled, the channel settings are hidden.
Magnitude selection for mA output channel	• Currents • Voltages • Powers • Impedance and admittance • Other	-	Currents	Defines the measurement category that is used for mA output control.

Name	Range	Step	Default	Description
Magnitude of mA output channel	(dependent on the measurement category selection)	-	(dependent on the measurement category selection)	Defines the measurement magnitude used for mA output control. The available measurements depend on the selection of the "Magnitude selection for mA output channel" parameter.
Input value 1	$-10^7 \ldots 10^7$	0.001	0	The first input point in the mA output control curve.
Scaled mA output value 1	0.0000…24.0000mA	0.0001mA	0mA	The mA output value when the measured value is equal to or less than Input value 1.
Input value 2	$-10^7 \ldots 10^7$	0.001	1	The second input point in the mA output control curve.
Scaled mA output value 2	0.0000…24.0000mA	0.0001mA	0mA	The mA output value when the measured value is equal to or greater than Input value 2.

Figure. 4.5.5 - 177. Example of the effects of mA output channel settings.

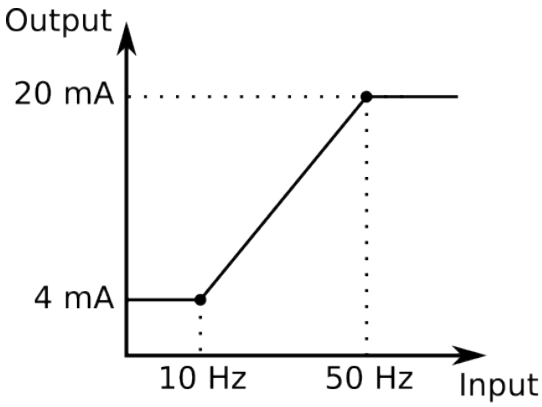

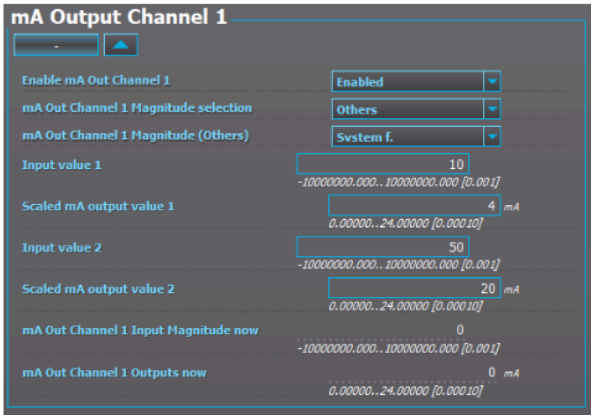

Table. 4.5.5 - 308. Hardware indications.

Name	Range	Description
Hardware in mA output channels 1...4	• None • Slot A • Slot B • Slot C • Slot D • Slot E • Slot F • Slot G • Slot H • Slot I • Slot J • Slot K • Slot L • Slot M • Slot N • Too many cards installed	Indicates the option card slot where the mA output card is located.
Hardware in mA output channels 5...8		

© Arcteq Relays Ltd
IM00021

Table. 4.5.5 - 309. Measurement values reported by mA output cards.

Name	Range	Step	Description
mA in Channel 1	0.0000…24.0000mA	0.0001mA	Displays the measured mA value of the selected input channel.
mA in Channel 2			
mA Out Channel Input Magnitude now	$-10^7 \ldots 10^7$	0.001	Displays the input value of the selected mA output channel at that moment.
mA Out Channel Outputs now	0.0000…24.0000mA	0.0001mA	Displays the output value of the selected mA output channel at that moment.

4.5.6 Programmable control switch

The programmable control switch is a control function that controls its binary output signal. This output signal can be controlled locally from the device's mimic or remotely from the RTU. The main purpose of programmable control switches is to block or enable function and to change function properties by changing the setting group. However, this binary signal can also be used for any number of other purposes, just like all other binary signals. Once a programmable control switch has been activated or disabled, it remains in that state until given a new command to switch to the opposite state (see the image below). The switch cannot be controlled by an auxiliary input, such as digital inputs or logic signals; it can only be controlled locally (mimic) or remotely (RTU).

Figure. 4.5.6 - 178. When a PCS has been controlled "ON" or "OFF", the PCS will keep its state.

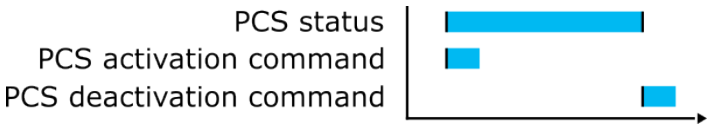

Setting up a switch in the mimic editor

Figure. 4.5.6 - 179. Programmable control switch setup in the mimic editor.

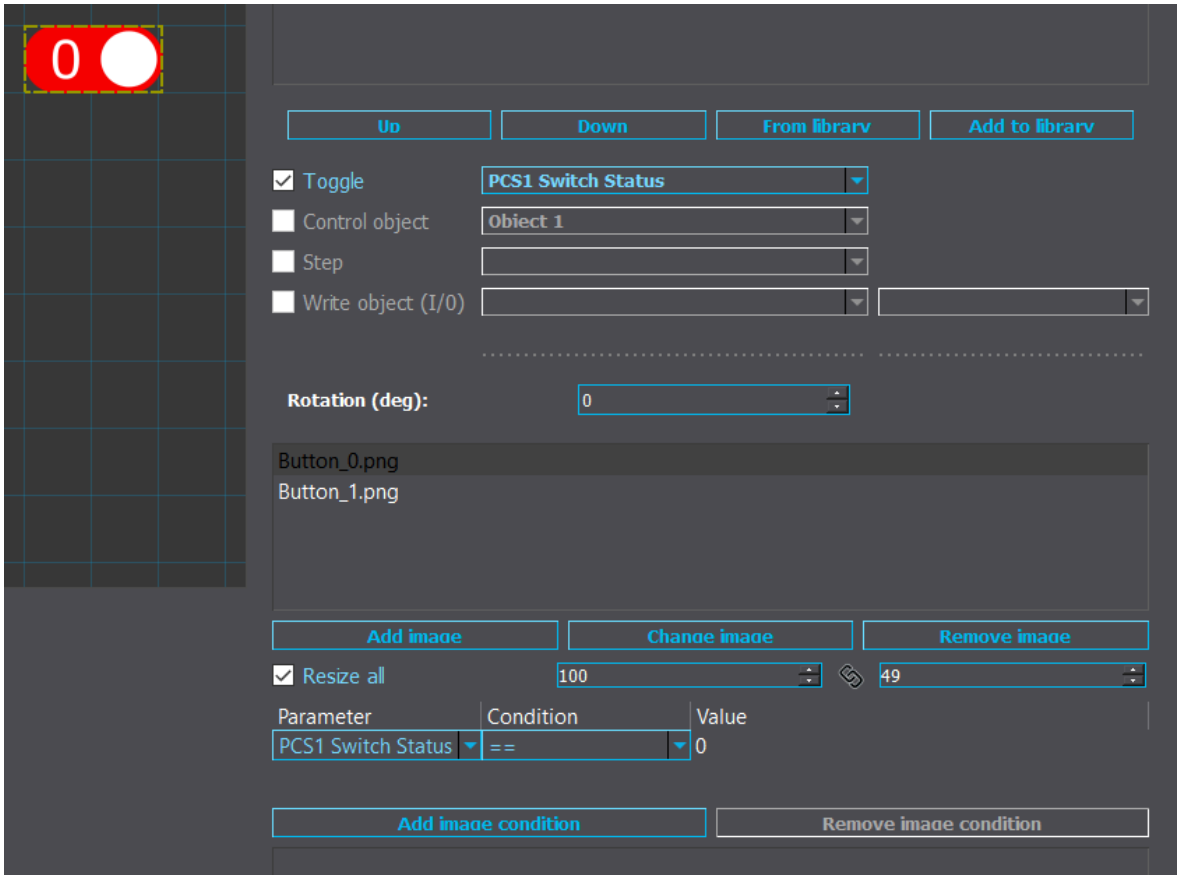

When an item has been added to the mimic, a collection of toggleable buttons can be found from the library with the "From library" button. To make an item a "programmable control switch", select one of the programmable switches (PCS1…5 Switch status) from the "Toggle" dropdown menu. After this select one of the images in the item ("Button_0.png" and "Button_1.png" in the example image above) and then choose the corresponding programmable control switch as the image condition. In the example image "Button_0.png" is displayed when "PCS1 Switch Status == 0". Set the other image (in this case "Button_1.png) to "PCS1 Switch Status == 1". When this is done, the image displayed by the item will follow the status of the programmable control switch.

If more than five toggleable switches are needed, logical inputs can also be set for the same purpose. The only difference is that the status of logical inputs are set to zero when the processor is rebooted, whereas programmable control switches keep the status.

Settings.

These settings can be accessed at *Control → Device I/O → Programmable control switch*.

Table. 4.5.6 - 310. Settings.

Name	Range	Default	Description
Switch name	-	Switchx	The user-settable name of the selected switch. The name can be up to 32 characters long.

© Arcteq Relays Ltd
IM00021

Name	Range	Default	Description
Access level for Mimic control	• User • Operator • Configurator • Super user	Configurator	Determines which access level is required to be able to control the programmable control switch via the Mimic.

Events

The programmable control switch function (abbreviated "PCS" in event block names) generates events from the status changes in the events listed below. The user can select which event messages are stored in the main event buffer: ON, OFF, or both. The events triggered by the function are recorded with a time stamp. The function offers five (5) independent switches. The function's output signals can be used for direct I/O controlling and user logic programming.

Table. 4.5.6 - 311. Event messages.

Event block name	Event names
PCS	Switch 1 ON/OFF
PCS	Switch 2 ON/OFF
PCS	Switch 3 ON/OFF
PCS	Switch 4 ON/OFF
PCS	Switch 5 ON/OFF

4.5.7 Function buttons

AQ 250 devices have twelve (12) physical function buttons in the front panel of the device. The main purpose of function buttons is to block or enable functions and to change function properties by changing the setting group. However, this binary signal can also be used for any number of other purposes, just like all other binary signals.

Function buttons have two operation modes: "Press release" and "Toggle On/Off". In "Press release" mode the button status is active while the button is pressed down. In "Toggle On/Off" mode the button status toggles between "On" and "Off". Each button has a user configurable LED at the top left corner of the button. The LED can be configured to activate red, orange or green color from button status or any other logical binary signal.

General button settings and LED activation settings can be set at *Control → Device IO → Function Button Settings*.

NOTICE!
The status of the function button outputs can only be controlled from the front panel i.e. can't be controlled remotely. Therefore it is recommended to use "a virtual button" (programmable control switches or logical inputs) if a toggleable signal must be controlled both locally and remotely.

Table. 4.5.7 - 312. User button settings

Name	Range	Step	Default	Description
Access level for function buttons	• User • Operator • Configurator • Super user	-	Operator	Determines which access level is required to be able to control the buttons.
Consider Local/ Remote switch for push-buttons	• No • Yes	-	No	When set to "Yes", the buttons can be operated only when the "L/R" button has been set to "Local" mode .
User editable description button 1…12	-	-	BTN1...12	Description of the button. If "Function button" view has been added to the "Carousel design", these descriptions are used for the buttons.
Function button 1…12 mode	Press release Toggle On/Off	-	Press release	Defines the operation mode of the button. In "Press release" mode the button signal is active while the button is pressed down. In "Toggle On/Off" mode the button signal changes status between "On" and "Off" each time the button is pressed.

Table. 4.5.7 - 313. Function button output signals

Signal name	Description
Status Function Button 1...12 ON/OFF	"On" and "Off" status of each button

4.5.8 Analog input scaling curves

Sometimes when measuring with RTD inputs, milliampere inputs and digital inputs the measurement might be inaccurate because the signal coming from the source is inaccurate. One common example of this is tap changer location indication signal not changing linearly from step to step. If the output difference between the steps are not equal to each other, measuring the incoming signal accurately is not enough. "Analog input scaling curves" menu can be used to take these inaccuracies into account.

Analog input scaling curve settings can be found at *Measurement → AI(mA, DI volt) scaling* menu.

Currently following measurements can be scaled with analog input scaling curves:

- RTD inputs and mA inputs in "RTD & mA input" option cards
- mA inputs in "4x mA output & 1x mA input" option cards
- mA input in "4x mA input & 1x mA output" option cards
- Digital input voltages

Table. 4.5.8 - 314. Main settings (input channel).

Name	Range	Step	Default	Description
Analog input scaling	• Disabled • Activated	-	Disabled	Enables and disables the input.

© Arcteq Relays Ltd
IM00021

Name	Range	Step	Default	Description
Scaling curve 1...10	• Disabled • Activated	-	Disabled	Enables and disables the scaling curve and the input measurement.
Curve 1...10 input signal select	• S7 mA Input • S8 mA Input • S15 mA Input • S16 mA Input • DI1...DI20 Voltage • RTD S1...S16 Resistance • mA In 1 (I card 1) • mA In 2 (I card 2) • mA In 1 (T card 1) • mA In 2 (T card 1) • mA In 3 (T card 1) • mA In 4 (T card 1) • mA In 1 (T card 2) • mA In 2 (T card 2) • mA In 3 (T card 2) • mA In 4 (T card 2)	-	S7 mA Input	Defines the measurement used by scaling curve.
Curve 1...10 input signal filtering	• No • Yes	-	No	Enables calculation of the average of received signal.
Curve 1...10 input signal filter time constant	0.005...3800.000 s	0.005 s	1 s	Time constant for input signal filtering. This parameter is visible when "Curve 1...4 input signal filtering" has been set to "Yes".
Curve 1...10 input signal out of range set	• No • Yes	-	No	Enables out of range signals. If input signal is out of minimum and maximum limits, "ASC1...4 input out of range" signal is activated.
Curve1...10 input minimum	-1 000 000.00...1 000 000.00	0.00001	0	Defines the minimum input of the curve. If input is below the set limit, "ASC1...4 input out of range" is activated.
Curve 1...10 input	-1 000 000.00...1 000 000.00	0.00001	-	Displays the input measurement received by the curve.
Curve1...10 input maximum	-1 000 000.00...1 000 000.00	0.00001	0	Defines the maximum input of the curve. If input is above the set limit, "ASC1...4 input out of range" is activated.

Name	Range	Step	Default	Description
Curve1...10 output	-1 000 000.00...1 000 000.00	0.00001	-	Displays the output of the curve.

The input signal filtering parameter calculates the average of received signals according to the set time constant. This is why rapid changes and disturbances (such as fast spikes) are smothered. The Nyquist rate states that the filter time constant must be at least double the period time of the disturbance process signal. For example, the value for the filter time constant is 2 seconds for a 1 second period time of a disturbance oscillation.

$$H(s) = \frac{Wc}{S+Wc} = \frac{1}{1+s/Wc}$$

When the curve signal is out of range, it activates the "ASC1...10 input out of range" signal, which can be used inside logic or with other functions of the device. The signal can be assigned directly to an output relay or to an LED in the I/O matrix. The "Out of range" signal is activated, when the measured signal falls below the set input minimum limit, or when it exceeds the input maximum limit.

If for some reason the input signal is lost, the value is fixed to the last actual measured cycle value. The value does not go down to the minimum if it has been something else at the time of the signal breaking.

Table. 4.5.8 - 315. Output settings and indications.

Name	Range	Step	Default	Description
Curve 1...10 update cycle	5...10 000ms	5ms	150ms	Defines the length of the input measurement update cycle. If the user wants a fast operation, this setting should be fairly low.
Scaled value handling	• Floating point • Integer out (Floor) • Integer (Ceiling) • Integer (Nearest)	-	Floating point	Rounds the milliampere signal output as selected.
Input value 1	0...4000	0.000 01	0	The measured input value at Curve Point 1.
Scaled output value 1	$-10^7...10^7$	0.000 01	0	Scales the measured milliampere signal at Point 1.
Input value 2	0...4000	0.000 01	1	The measured input value at Curve Point 2.
Scaled output value 1	$-10^7...10^7$	0.000 01	0	Scales the measured milliampere signal at Point 2.

© Arcteq Relays Ltd
IM00021

Name	Range	Step	Default	Description
Add curvepoint 3...20	• Not used • Used	-	Not used	Allows the user to create their own curve with up to twenty (20) curve points, instead of using a linear curve between two points.

4.5.9 Logical outputs

Logical outputs are used for sending binary signals out from a logic that has been built in the logic editor. Logical signals can be used for blocking functions, changing setting groups, controlling digital outputs, activating LEDs, etc. The status of logical outputs can also be reported to a SCADA system. 64 logical outputs are available. The figure below presents a logic output example where a signal from the circuit breaker failure protection function controls the digital output relay number 3 ("OUT3") when the circuit breaker's cart status is "In".

Figure. 4.5.9 - 180. Logic output example. Logical output is connected to an output relay in matrix.

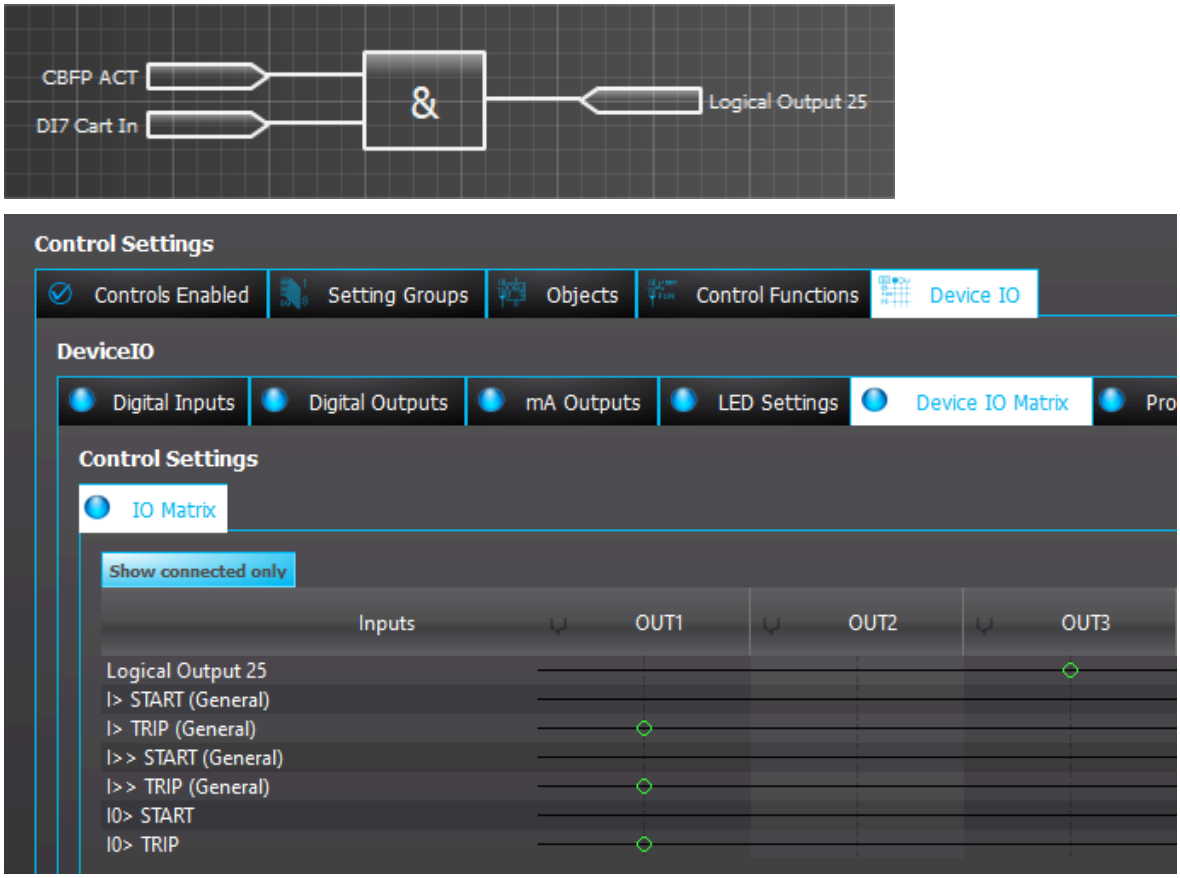

Logical output descriptions

Logical outputs can be given a description. The user defined description are displayed in most of the menus:

- logic editor
- matrix
- block settings
- event history
- disturbance recordings
- etc.

Table. 4.5.9 - 316. Logical output user description.

Name	Range	Default	Description
User editable description LO1...64	1...31 characters	Logical output 1...64	Description of the logical output. This description is used in several menu types for easier identification.

NOTICE!
After editing user descriptions the event history will start to use the new description only after resetting the HMI. HMI can be reset from *General → Device info → HMI restart*.

Events

The logical outputs (abbreviated "LOGIC" in event block names) generates events from the status changes in the events listed below. The user can select which event messages are stored in the main event buffer: ON, OFF, or both. The events triggered by the function are recorded with a time stamp. The function's output signals can be used for direct I/O controlling and user logic programming.

Table. 4.5.9 - 317. Event messages.

Event block name	Event names
LOGIC1	Logical out 1...32 ON/OFF
LOGIC3	Logical out 33...64 ON/OFF

4.5.10 Logical inputs

Logical inputs are binary signals that a user can control manually to change the behavior of the device or to give direct control commands. Logical inputs can be controlled with a virtual switch built in the mimic and from a SCADA system. Logical inputs are volatile signals: their status will always return to "0" when the device is rebooted. 32 logical inputs are available.

Logical inputs have two modes available: Hold and Pulse. When a logical input which has been set to "Hold" mode is controlled to "1", the input will switch to status "1" and it stays in that status until it is given a control command to go to status "0" or until the device is rebooted. When a logical input which has been set to "Pulse" mode is controlled to "1", the input will switch to status "1" and return back to "0" after 5 ms.

The figure below presents the operation of a logical input in Hold mode and in Pulse mode.

Figure. 4.5.10 - 181. Operation of logical input in "Hold" and "Pulse" modes.

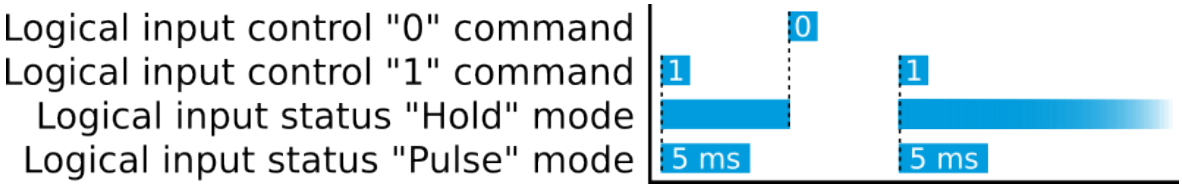

A logical input pulse can also be extended by connecting a DELAY-low gate to a logical output, as has been done in the example figure below.

© Arcteq Relays Ltd
IM00021

Figure. 4.5.10 - 182. Extending a logical input pulse.

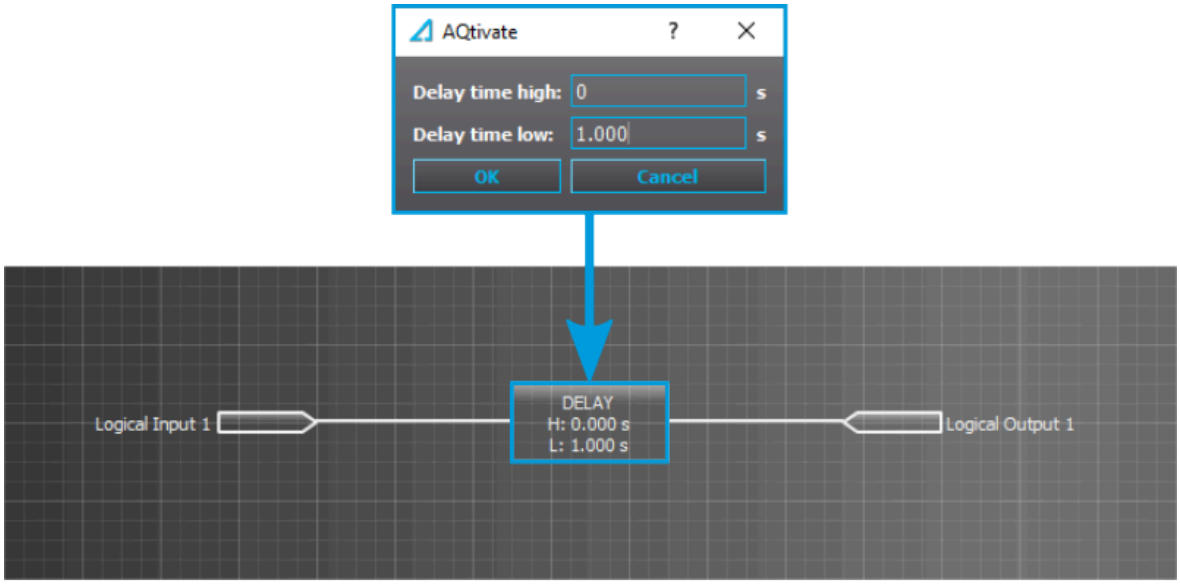

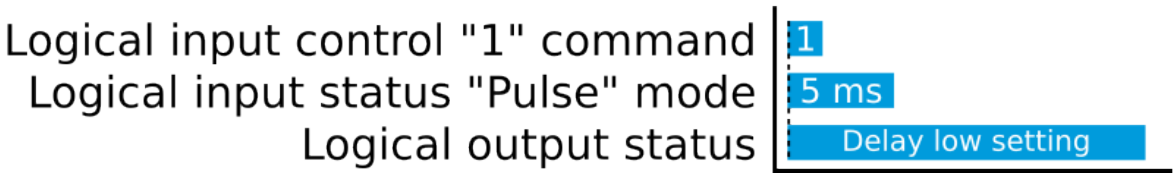

Logical input descriptions

Logical inputs can be given a description. The user defined description are displayed in most of the menus:

- logic editor
- matrix
- block settings
- event history
- disturbance recordings
- etc.

Table. 4.5.10 - 318. Logical input user description.

Name	Range	Default	Description
User editable description LI1...32	1...31 characters	Logical input 1...32	Description of the logical input. This description is used in several menu types for easier identification.

NOTICE!
After editing user descriptions the event history will start to use the new description only after resetting the HMI. HMI can be reset from *General → Device info → HMI restart*.

Events

The logical outputs (abbreviated "LOGIC" in event block names) generates events from the status changes in the events listed below. The user can select which event messages are stored in the main event buffer: ON, OFF, or both. The events triggered by the function are recorded with a time stamp. The function's output signals can be used for direct I/O controlling and user logic programming.

Table. 4.5.10 - 319. Event messages.

Event block name	Event names
LOGIC2	Logical in 1...32 ON/OFF

4.6 Monitoring functions

4.6.1 Current transformer supervision

The current transformer supervision function (abbreviated CTS in this document) is used for monitoring the CTs as well as the wirings between the device and the CT inputs for malfunctions and wire breaks. An open CT circuit can generate dangerously high voltages into the CT secondary side, and cause unintended activations of current balance monitoring functions.

Figure. 4.6.1 - 183. Secondary circuit fault in phase L1 wiring.

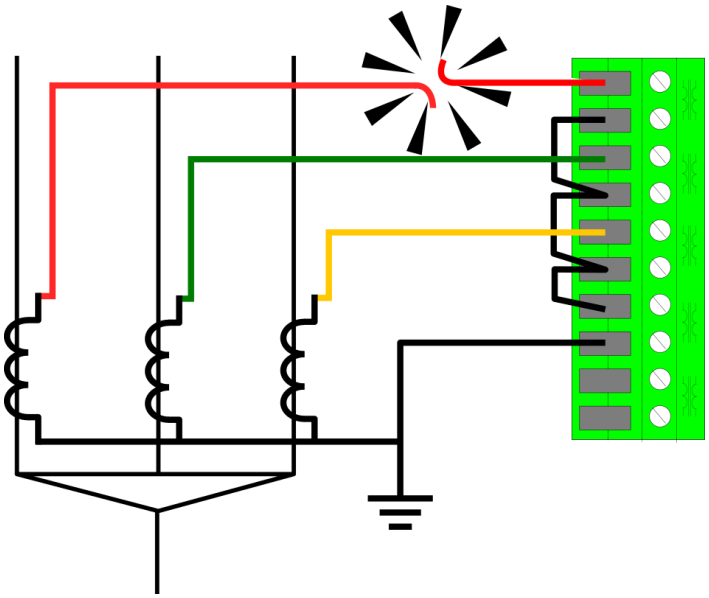

The function constantly monitors the instant values and the key calculated magnitudes of the phase currents. Additionally, the residual current circuit can be monitored if the residual current is measured from a dedicated residual current CT. The user can enable and disable the residual circuit monitoring at will.

The following conditions have to be met simultaneously for the function alarm to activate:

- None of the three-phase currents exceeds the I_{set} *high limit* setting.
- At least one of the three-phase currents exceeds the I_{set} *low limit* setting.
- At least one of the three-phase currents are below the I_{set} *low limit* setting.
- The ratio between the calculated minimum and maximum of the three-phase currents is below the I_{set} *ratio* setting.

© Arcteq Relays Ltd
IM00021

- The ratio between the negative sequence and the positive sequence exceeds the *I2/I1 ratio* setting.
- The calculated difference (IL1+IL2+IL3+I0) exceeds the I_{sum} *difference* setting (optional).
- The above-mentioned condition is met until the set time delay for alarm.

Figure. 4.6.1 - 184. Simplified function block diagram of the CTS function.

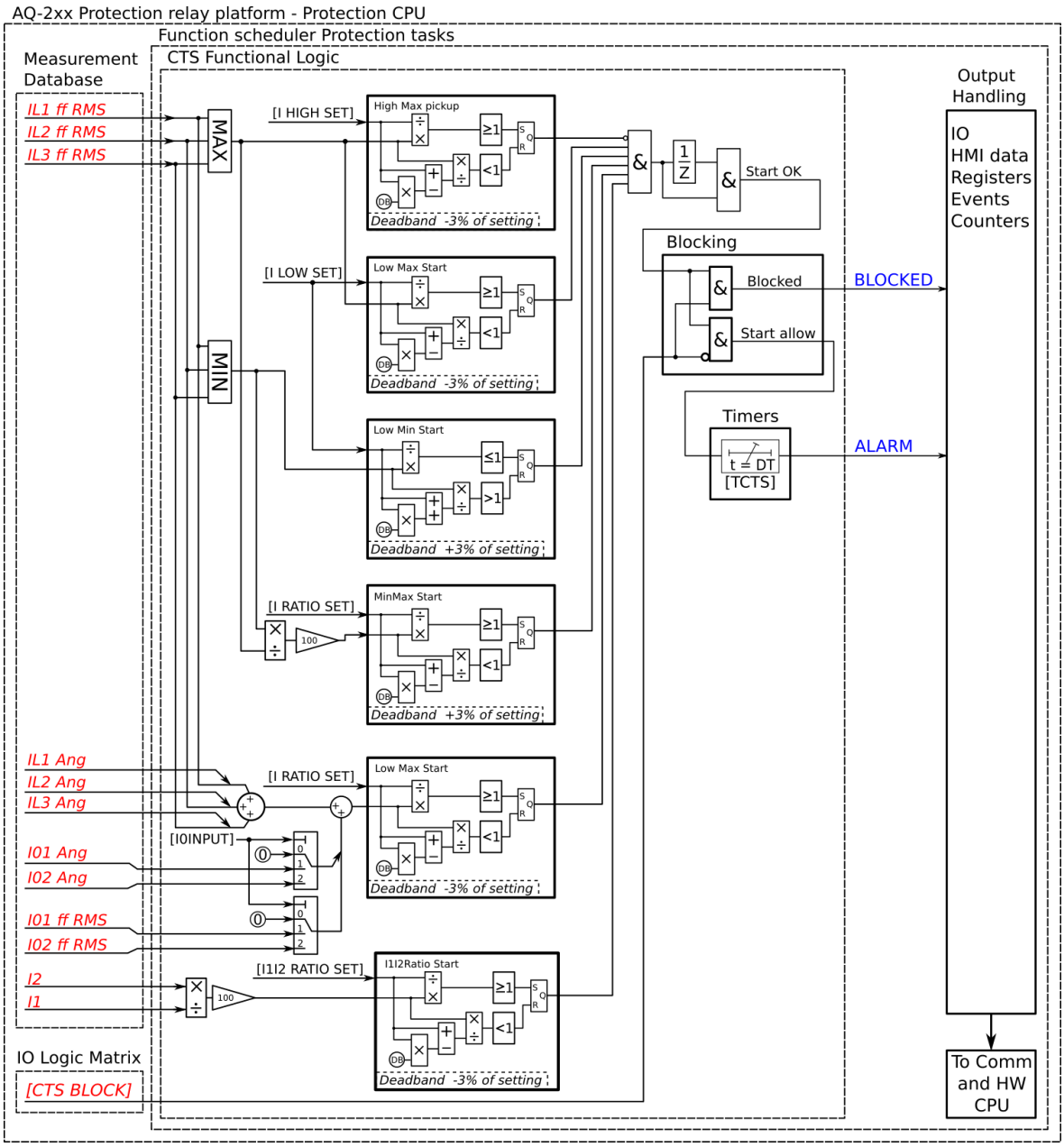

Measured input

The function block uses fundamental frequency component of phase current measurement values and residual current measurement values. The function supervises the angle of each current measurement channel. Positive sequence current and negative sequence currents are calculated from the phase currents. The user can select what is used for the residual current measurement: nothing, the I01 channel, or the I02 channel.

Table. 4.6.1 - 320. Measured inputs of the CTS function.

Signal	Description
I_{L1}RMS	Fundamental frequency component of phase L1 (A) current
I_{L2}RMS	Fundamental frequency component of phase L2 (B) current
I_{L3}RMS	Fundamental frequency component of phase L3 (C) current
I_{01}RMS	Fundamental frequency component of residual input I01
I_{02}RMS	Fundamental frequency component of residual input I02

General settings

The following general settings define the general behavior of the function. These settings are static i.e. it is not possible to change them by editing the setting group.

Table. 4.6.1 - 321. General settings of the function.

Name	Range	Default	Description
CTS LN mode	• On • Blocked • Test • Test/ Blocked • Off	On	Set mode of CTS block. This parameter is visible only when *Allow setting of individual LN mode* is enabled in *General* menu.
CTS force status to	• Normal • Alarm • Blocked	Normal	Force the status of the function. Visible only when *Enable stage forcing* parameter is enabled in *General* menu.
I0 input selection	• Not in use • I01 • I02	Not in use	Selects the measurement input for the residual current. If the residual current is measured with a separate CT, the residual current circuit can be monitored with the CTS function as well. However, this does not apply to summing connections (Holmgren, etc.). If the phase current CT is summed with I01 or I02, this selection should be set to "Not in use".
I0 direction	• Add • Subtract	Add	Defines the polarity of residual current channel connection.
Compensate natural unbalance	• - • Comp	-	When activated while the line is energized, the currently present calculated residual current is compensated to 0.

Pick-up settings

The I_{set} and $I0_{set}$ setting parameters control the current-dependent pick-up and activation of the current transformer supervision function. They define the minimum and maximum allowed measured current before action from the function. The function constantly calculates the ratio between the setting values and the measured magnitude (I_m) for each of the three phases and for the selected residual current input. The reset ratio of 97 % and 103% are built into the function and is always relative to the I_{set} value. The setting value is common for all measured amplitudes, and when the I_m exceeds the I_{set} value (in single, dual or all currents) it triggers the pick-up operation of the function.

© Arcteq Relays Ltd
IM00021

Setting group selection controls the operating characteristics of the function, i.e. the user or user-defined logic can change function parameters while the function is running.

Table. 4.6.1 - 322. Pick-up settings.

Name	Range	Step	Default	Description
I_{set} high limit	0.01…40.00×I_n	0.01×I_n	1.20×I_n	Determines the pick-up threshold for phase current measurement. This setting limit defines the upper limit for the phase current's pick-up element. If this condition is met, it is considered as fault and the function is not activated.
I_{set} low limit	0.01…40.00×I_n	0.01×I_n	0.10×I_n	Determines the pick-up threshold for phase current measurement. This setting limit defines the lower limit for the phase current's pick-up element. This condition has to be met for the function to activate.
I_{set} ratio	0.01…100.00%	0.01%	10.00%	Determines the pick-up ratio threshold between the minimum and maximum values of the phase current. This condition has to be met for the function to activate.
I2/I1 ratio	0.01…100.00%	0.01%	49.00%	Determines the pick-up ratio threshold for the negative and positive sequence currents calculated from the phase currents. This condition has to be met for the function to activate. The ratio is 50 % for a full single-phasing fault (i.e. when one of the phases is lost entirely). Setting this at 49 % allows a current of 0.01 × I_n to flow in one phase, wile the other two are at nominal current.
I_{sum} difference	0.01…40.00×I_n	0.01×I_n	0.10×I_n	Determines the pick-up ratio threshold for the calculated residual phase current and the measured residual current. If the measurement circuit is healthy, the sum of these two currents should be 0.
Time delay for alarm	0.000…1800.000s	0.005s	0.5s	Determines the delay between the activation of the function and the alarm.

Read-only parameters

The function's *Info* page displays useful, real-time information on the state of the protection function. It is accessed either through the device's HMI display, or through the setting tool software when it is connected to the device and its Live Edit mode is active.

Table. 4.6.1 - 323. Information displayed by the function.

Name	Range	Step	Description
CTS LN behaviour	• On • Blocked • Test • Test/ Blocked • Off	-	Displays the mode of CTS block. This parameter is visible only when *Allow setting of individual LN mode* is enabled in *General* menu.

Name	Range	Step	Description
Uncompensated residual unbalance Pri	• Normal • Start • Trip • Blocked	-	Displays the natural unbalance of current after compensating it with *Compensate natural unbalance* parameter.
Natural unbalance ang	-360.00...360.00 deg	0.01 deg	Displays the natural unbalance of angle after compensating it with *Compensate natural unbalance* parameter.
Measured current difference Isum, I0	0.00...50.00 xIn	0.01 xIn	Current difference between summed phases and residual current.
Measured angle difference Isum, I0	-360...360 deg	0.01 deg	Angle difference between summed phases and residual current.

Function blocking

The blocking signal is evaluated at the start of each program cycle. The blocking signals are connected to the function's dedicated input, which can be configured in the *IO → Blocking Input Control* tab of the function.

- When the pick-up element activates and the blocking signal is not active, the function starts the countdown.
- When the pick-up element activates while the blocking signal is active, BLOCKED signal is generated, but no further processing is performed.
- If ALARM signal is already active when the blocking input signal becomes active, BLOCKED signal is generated, and the release-time characteristics are processed as if the fault condition had been cleared.

The blocking signal needs to reach the device minimum of 5 ms before the set operating delay has passed in order for the blocking to activate in time.

Operating time characteristics

This function supports definite time delay (DT). For detailed information on this delay type please refer to the chapter "General properties of a protection function" and its section "Operating time characteristics".

Typical cases of current transformer supervision

The following nine examples present some typical cases of the current transformer supervision and their setting effects.

© Arcteq Relays Ltd
IM00021

Figure. 4.6.1 - 185. All works properly, no faults.

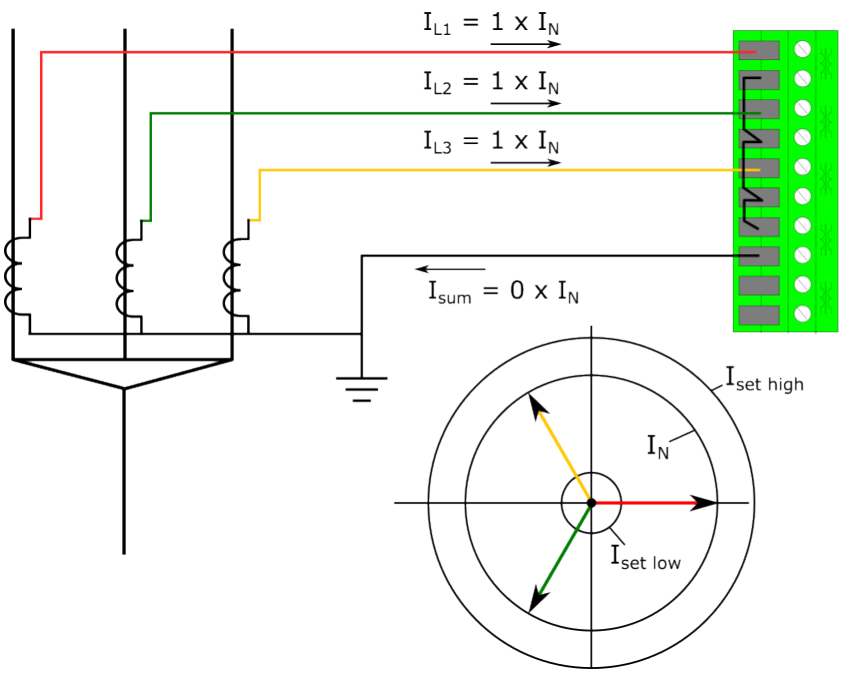

Settings:
I_{set} High limit = 1.20 x I_N
I_{set} Low limit = 0.10 x I_N
I_{set} ratio = 10.00 %
I1/I2 ratio = 49.00 %
I_0 input = Not in use

Measurements:
I_{min} = 1 x I_N
I_{max} = 1 x I_N
I1 = 1 x I_N
I2 = 0 x I_N
I_{min}/I_{max} = 1
I2/I1 = 0%

CTS conditions:
I_{set} High limit < = 1
I_{set} Low limit low < = 0
I_{set} Low limit high > = 1
I ratio < = 0
$I_{unbalance}$ ratio > = 0

Figure. 4.6.1 - 186. Secondary circuit fault in phase L1 wiring.

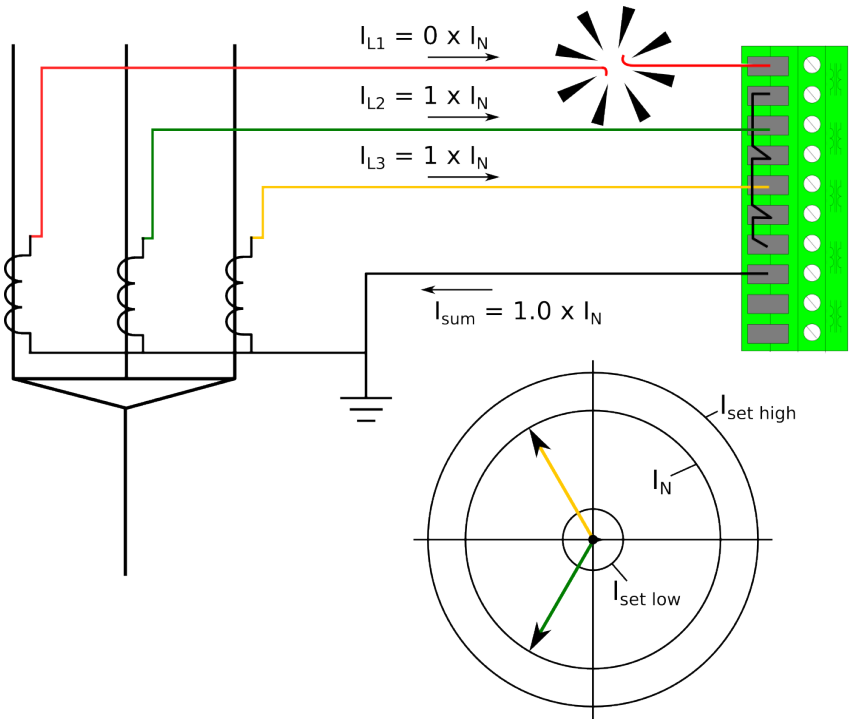

Settings:
I_{set} High limit = 1.20 x I_N
I_{set} Low limit = 0.10 x I_N
I_{set} ratio = 10.00 %
I1/I2 ratio = 49.00 %
I_0 input = Not in use

Measurements:
I_{min} = 0 x I_N
I_{max} = 1 x I_N
I1 = 0.67 x I_N
I2 = 0.33 x I_N
I_{min}/I_{max} = 0
I2/I1 = 50%

CTS conditions:
I_{set} High limit < = 1
I_{set} Low limit low < = 1
I_{set} Low limit high > = 1
I ratio < = 1
$I_{unbalance}$ ratio > = 1

When a fault is detected and all conditions are met, the CTS timer starts counting. If the situation continues until the set time has passed, the function issues an alarm.

Figure. 4.6.1 - 187. Primary circuit fault in phase L1 wiring.

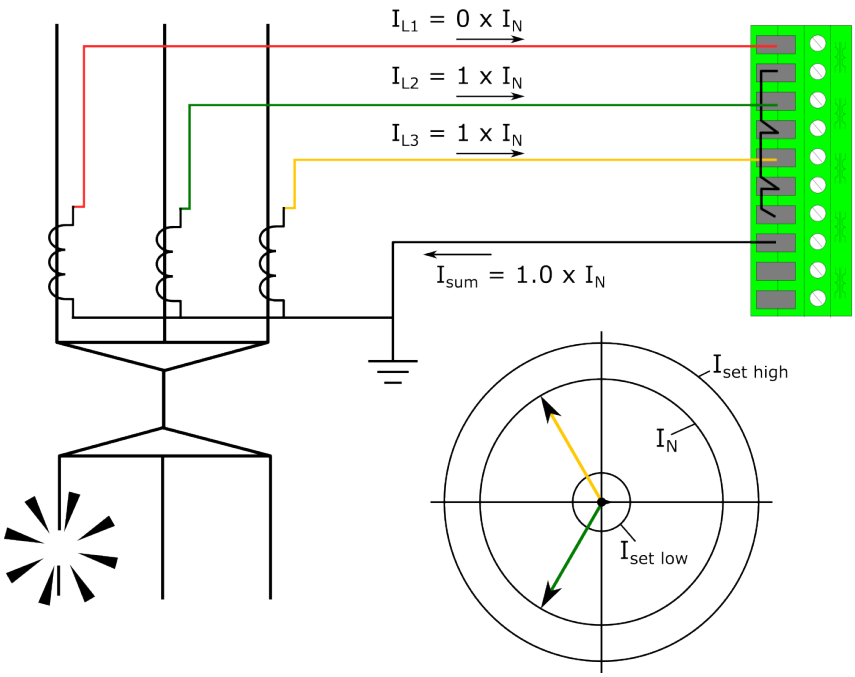

Settings:
I_{set} High limit = 1.20 x I_N
I_{set} Low limit = 0.10 x I_N
I_{set} ratio = 10.00 %
I1/I2 ratio = 49.00 %
I_0 input = Not in use

Measurements:
I_{min} = 0 x I_N
I_{max} = 1 x I_N
I1 = 0.67 x I_N
I2 = 0.33 x I_N
I_{min}/I_{max} = 0
I2/I1 = 50%

CTS conditions:
I_{set} High limit < = 1
I_{set} Low limit low < = 1
I_{set} Low limit high > = 1
I ratio < = 1
$I_{unbalance}$ ratio > = 1

In this example, distinguishing between a primary fault and a secondary fault is impossible. However, the situation meets the function's activation conditions, and if this state (secondary circuit fault) continues until the set time has passed, the function issues an alarm. This means that the function supervises both the primary and the secondary circuit.

Figure. 4.6.1 - 188. No wiring fault but heavy unbalance.

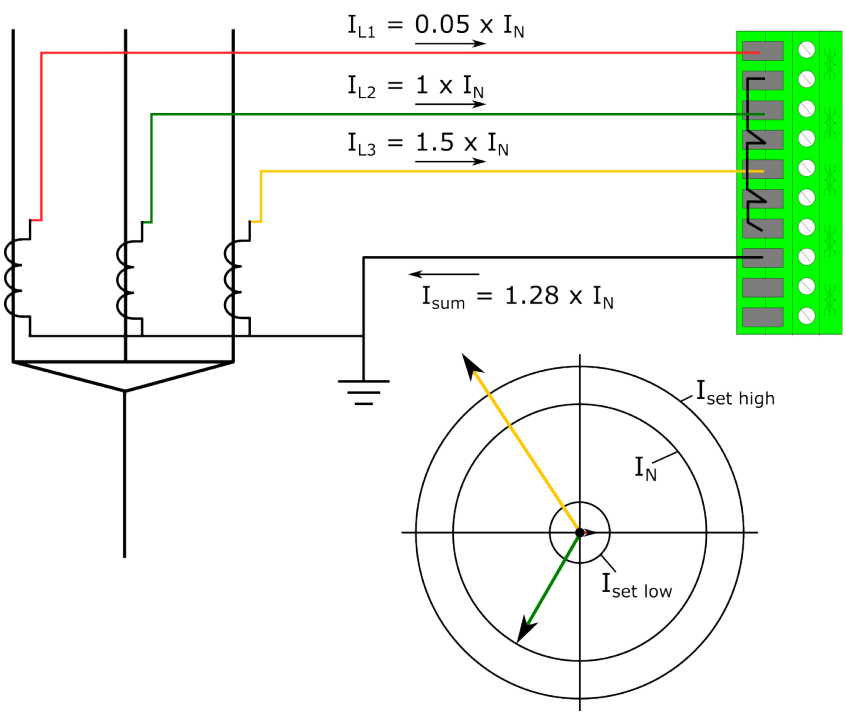

Settings:
I_{set} High limit = 1.20 x I_N
I_{set} Low limit = 0.10 x I_N
I_{set} ratio = 10.00 %
I1/I2 ratio = 49.00 %
I_0 input = Not in use

Measurements:
I_{min} = 0.05 x I_N
I_{max} = 1.50 x I_N
I1 = 0.85 x I_N
I2 = 0.43 x I_N
I_{min}/I_{max} = 0.7 %
I2/I1 = 50.03 %

CTS conditions:
I_{set} High limit < = 0
I_{set} Low limit low < = 1
I_{set} Low limit high > = 1
I ratio < = 1
$I_{unbalance}$ ratio > = 1

If any of the phases exceed the *I_{set} high limit* setting, the operation of the function is not activated. This behavior is applied to short-circuits and earth faults even when the fault current exceeds the *I_{set} high limit* setting.

© Arcteq Relays Ltd
IM00021

Figure. 4.6.1 - 189. Low current and heavy unbalance.

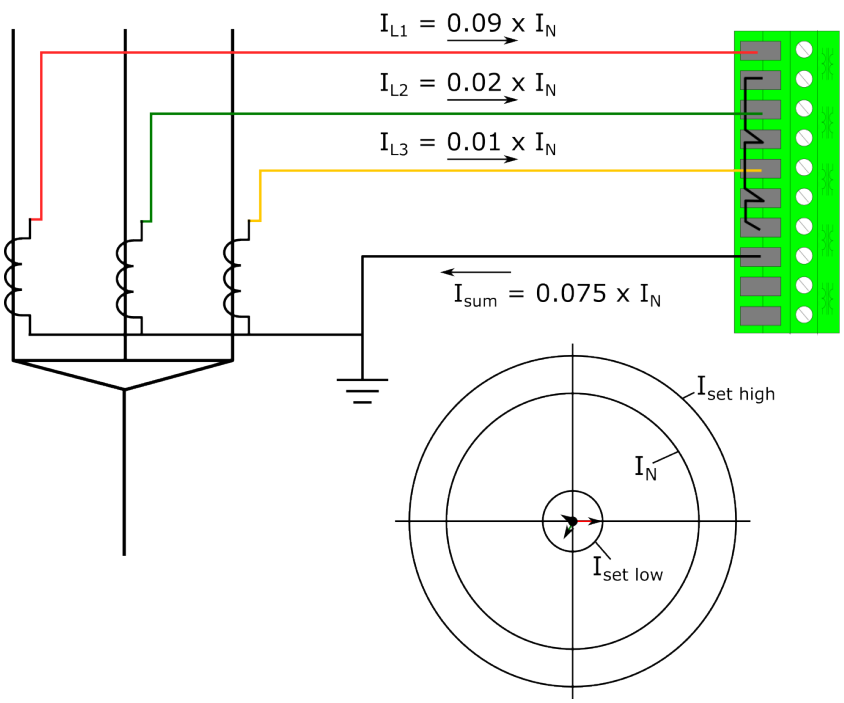

Settings:
I_{set} High limit = 1.20 x I_N
I_{set} Low limit = 0.10 x I_N
I_{set} ratio = 10.00 %
I1/I2 ratio = 49.00 %
I_0 input = Not in use

Measurements:
I_{min} = 0.01 x I_N
I_{max} = 0.09 x I_N
I1 = 0.04 x I_N
I2 = 0.03 x I_N
I_{min}/I_{max} = 11.0 %
I2/I1 = 62.92 %

CTS conditions:
I_{set} High limit < = 1
I_{set} Low limit low < = 1
I_{set} Low limit high > = 0
I ratio < = 1
$I_{unbalance}$ ratio > = 1

If all of the measured phase magnitudes are below the *I_{set} low limit* setting, the function is not activated even when the other conditions (inc. the unbalance condition) are met.

If the *I_{set} high limit* and *I_{set} low limit* setting parameters are adjusted according to the application's normal behavior, the operation of the function can be set to be very sensitive for broken circuit and conductor faults.

Figure. 4.6.1 - 190. Normal situation, residual current also measured.

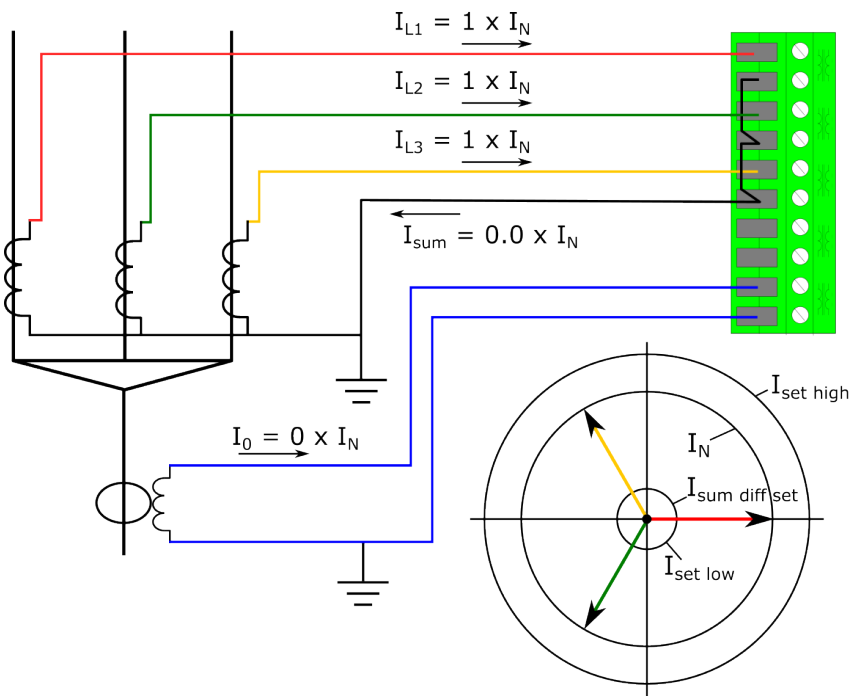

Settings:
I_{set} High limit = 1.20 x I_N
I_{set} Low limit = 0.10 x I_N
I_{set} ratio = 10.00 %
I1/I2 ratio = 49.00 %
I_0 input = I_{01}
I_{sum} Difference= 0.10 x I_N

Measurements:
I_{min} = 1 x I_N
I_{max} = 1 x I_N
I1 = 1 x I_N
I2 = 0 x I_N
I_{min}/I_{max} = 1
I2/I1 = 0
I_{sum} Difference= 0.0 x I_N

CTS conditions:
I_{set} High limit < = 1
I_{set} Low limit low < = 0
I_{set} Low limit high > = 1
I ratio < = 0
$I_{unbalance}$ ratio > = 0

When the residual condition is added with the "I0 input selection", the sum of the current and the residual current are compared against each other to verify the wiring condition.

Figure. 4.6.1 - 191. Broken secondary phase current wiring.

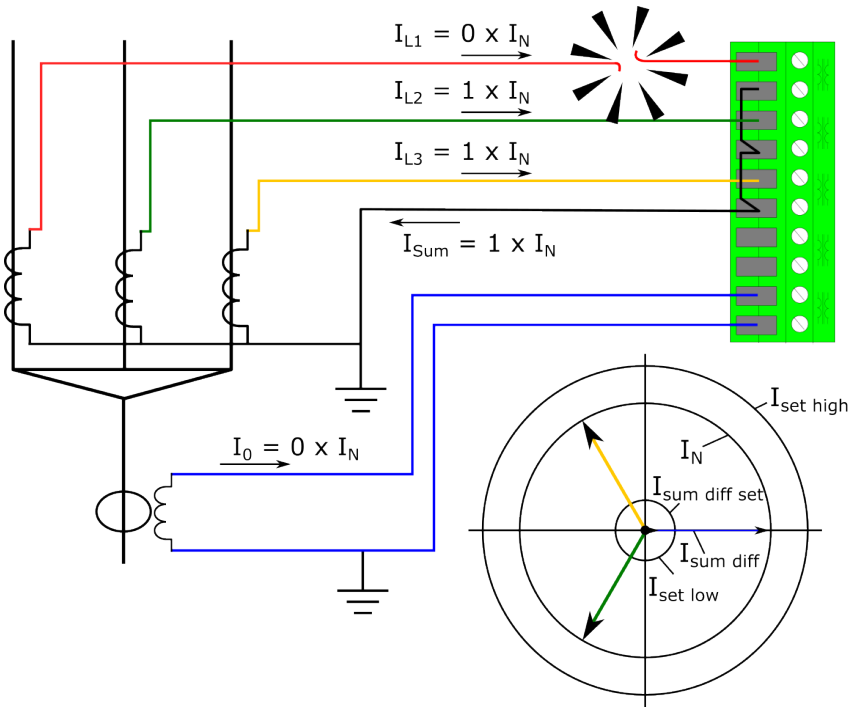

Settings:
I_{set} High limit = 1.20 x I_N
I_{set} Low limit = 0.10 x I_N
I_{set} ratio = 10.00 %
I1/I2 ratio = 49.00 %
I_0 input = I_{01}
I_{sum} Difference= 0.10 x I_N

Measurements:
I_{min} = 1 x I_N
I_{max} = 0 x I_N
I1 = 0.67 x I_N
I2 = 0.33 x I_N
I_{min}/I_{max} = 0
I2/I1 = 50 %
I_{sum} Difference= 1.0 x I_N

CTS conditions:
I_{set} High limit < = 1
I_{set} Low limit low < = 1
I_{set} Low limit high > = 1
I ratio < = 1
$I_{unbalance}$ ratio > = 1
I_{sum} Difference > = 1

When phase current wire is broken all of the conditions are met in the CTS and alarm shall be issued in case if the situation continues until the set alarming time is met.

Figure. 4.6.1 - 192. Broken primary phase current wiring.

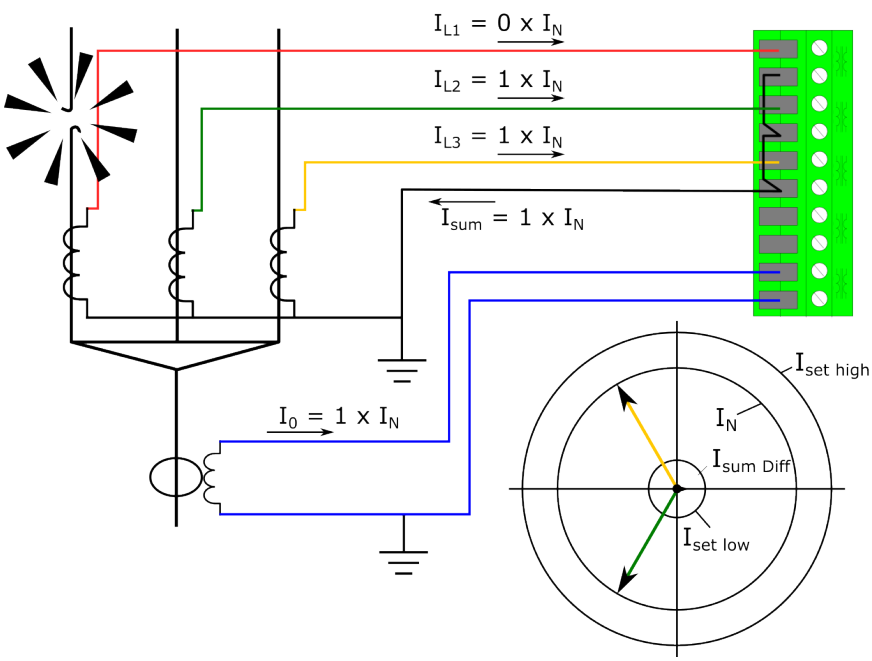

Settings:
I_{set} High limit = 1.20 x I_N
I_{set} Low limit = 0.10 x I_N
I_{set} ratio = 10.00 %
I1/I2 ratio = 49.00 %
I_0 input = I_{01}
I_{sum} Difference= 0.10 x I_N

Measurements:
I_{min} = 0 x I_N
I_{max} = 1 x I_N
I1 = 0.67 x I_N
I2 = 0.33 x I_N
I_{min}/I_{max} = 0
I2/I1 = 50 %
I_{sum} Difference= 0.0 x I_N

CTS conditions:
I_{set} High limit < = 1
I_{set} Low limit low < = 1
I_{set} Low limit high > = 1
I ratio < = 1
$I_{unbalance}$ ratio > = 1
I_{sum} Difference > = 0

In this example, all other condition are met except the residual difference. That is now 0 × I_n, which indicates a primary side fault.

© Arcteq Relays Ltd
IM00021

Figure. 4.6.1 - 193. Primary side high-impedance earth fault.

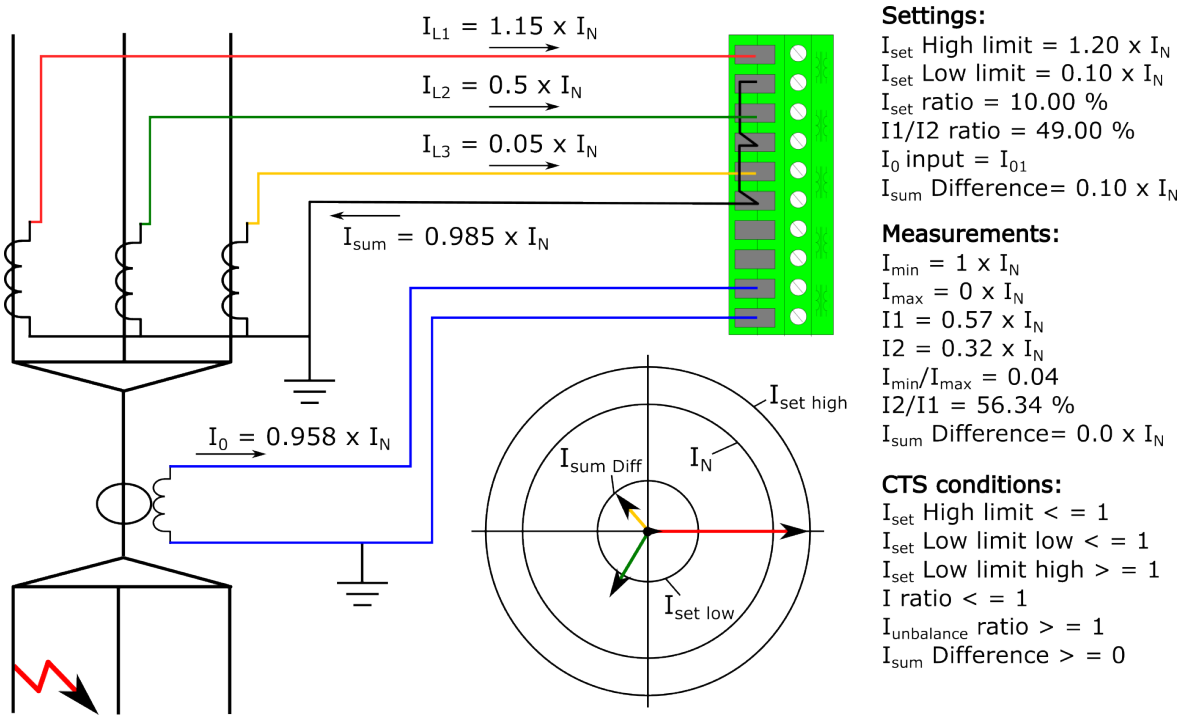

In this example there is a high-impedance earth fault. It does not activate the function, if the measurement conditions are met, while the calculated and measured residual current difference does not reach the limit. The *I_{sum} difference* setting should be set according to the application in order to reach maximum security and maximum sensitivity for the network earthing.

Events and registers

The current transformer supervision function (abbreviated "CTS" in event block names) generates events and registers from the status changes in the events listed below. The user can select which event messages are stored in the main event buffer: ON, OFF, or both.

The function's outputs can be used for direct I/O controlling and user logic programming. The function also provides a resettable cumulative counter for the CTS ALARM and BLOCKED events.

Table. 4.6.1 - 324. Event messages.

Event block name	Event names
CTS1	Alarm ON/OFF
CTS1	Block ON/OFF
CTS2	Alarm ON/OFF
CTS2	Block ON/OFF

The function registers its operation into the last twelve (12) time-stamped registers; this information is available for all provided instances separately. The register of the function records the ON event process data for ACTIVATED, BLOCKED, etc. The table below presents the structure of the function's register content.

Table. 4.6.1 - 325. Register content.

Register	Description
Date and time	dd.mm.yyyy hh:mm:ss.mss
Event	Event name
Trigger currents	The phase currents (L1, L2 & L3), the residual currents (I01 & I02), and the sequence currents (I1 & I2) on trigger time.
Time to CTSact	Time remaining before alarm activation.
Fault type	The status code of the monitored current.
Setting group in use	Setting group 1...8 active

4.6.2 Voltage transformer supervision (60)

Voltage transformer supervision is used to detect errors in the secondary circuit of the voltage transformer wiring and during fuse failure. This signal is mostly used as an alarming function or to disable functions that require adequate voltage measurement.

Figure. 4.6.2 - 194. Secondary circuit fault in phase L1 wiring.

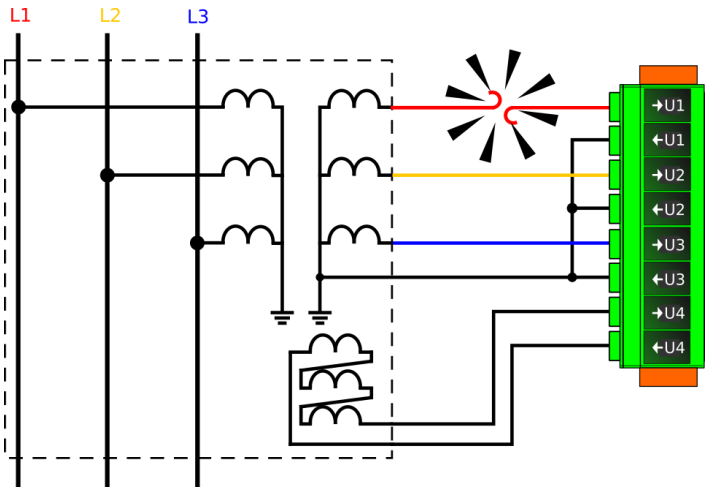

© Arcteq Relays Ltd
IM00021

Figure. 4.6.2 - 195. Simplified function block diagram of the VTS function.

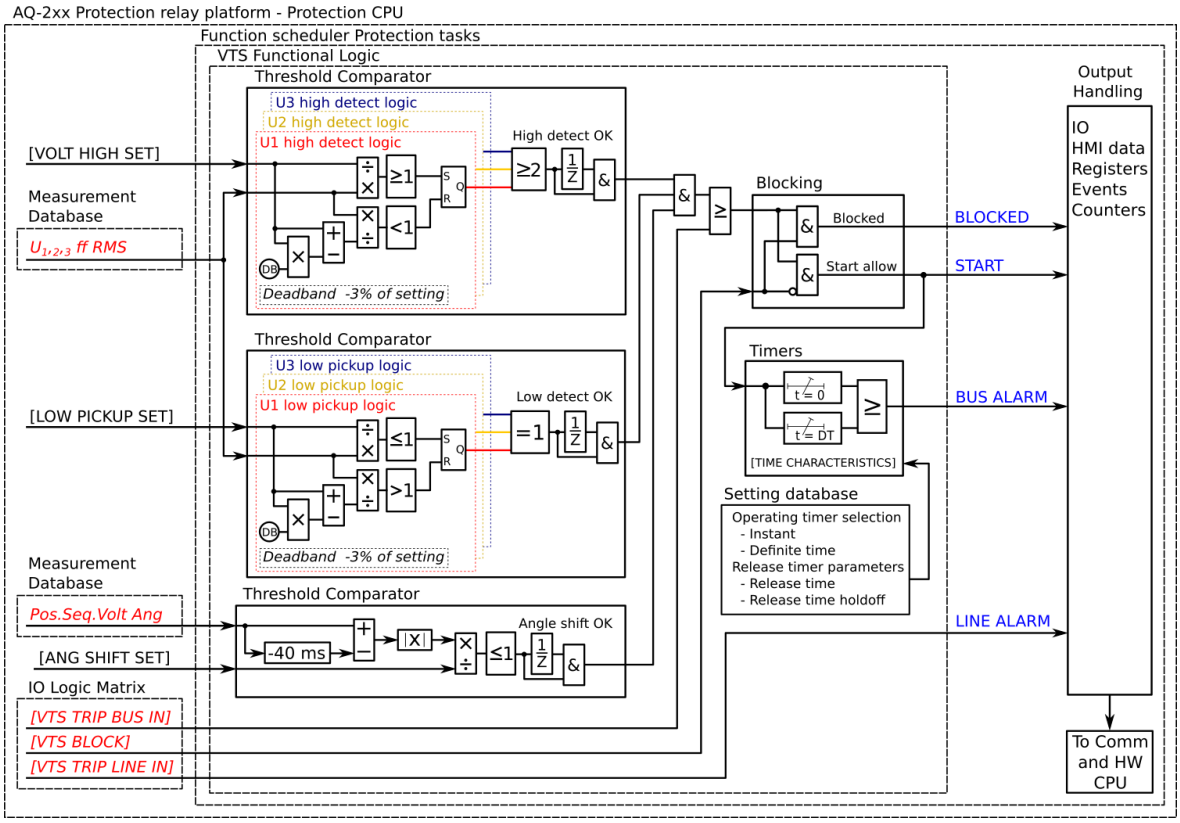

Measured input

The function block uses fundamental frequency component of voltage measurement channels. The function uses calculated positive, negative and zero sequence voltages. The function also monitors the angle of each voltage channel.

Table. 4.6.2 - 326. Measurement inputs of the voltage transformer supervision function.

Signal	Description
U_1RMS	Fundamental frequency component of U_1/V voltage measurement
U_2RMS	Fundamental frequency component of U_2/V voltage measurement
U_3RMS	Fundamental frequency component of U_3/V voltage measurement
U_4RMS	Fundamental frequency component of U_4/V voltage measurement

General settings

The following general settings define the general behavior of the function. These settings are static i.e. it is not possible to change them by editing the setting group.

Table. 4.6.2 - 327. General settings of the function.

Name	Range	Default	Description
VTS LN mode	• On • Blocked • Test • Test/ Blocked • Off	On	Set mode of VTS block. This parameter is visible only when *Allow setting of individual LN mode* is enabled in *General* menu.
VTS force status to	• Normal • Start • VTLinefail • VTBusfail • Blocked	Normal	Force the status of the function. Visible only when *Enable stage forcing* parameter is enabled in *General* menu.

Pick-up settings

The *Voltage low pick-up* and *Voltage high detect* setting parameters control the voltage-dependent pick-up and activation of the voltage transformer supervision function. The function's pick-up activates, if at least one of the three voltages is under the set *Voltage low pick-up* value, or if at least two of the three voltages exceed the set *Voltage high detect* value. The function constantly calculates the ratio between the setting values and the measured magnitude for each of the three phases.

Setting group selection controls the operating characteristics of the function, i.e. the user or user-defined logic can change function parameters while the function is running.

Table. 4.6.2 - 328. Pick-up settings.

Name	Range	Step	Default	Description
Voltage low pickup	0.05…0.50×U_n	0.01×U_n	0.05×U_n	If one the measured voltages is below low pickup value and two of the measured voltages exceed high detect value the function's pick-up activates.
Voltage high detect	0.01…1.10×U_n	0.01×U_n	0.80×U_n	
Angle shift limit	2.00…90.00deg	0.10deg	5.00deg	If the difference between the present angle and the angle 40 ms before is above the set value, the function's pick-up is blocked.
Bus fuse fail check	• No • Yes	-	Yes	Selects whether or not the state of the bus fuse is supervised. The supervised signal is determined the "VTS MCB Trip bus" setting (*I/O → Fuse failure inputs*).
Line fuse fail check	• No • Yes	-	Yes	Selects whether or not the state of the line fuse is supervised. The supervised signal is determined by the "VTS MCB Trip line" setting (*I/O → Fuse failure inputs*).

The voltage transformer supervision can also report several different states of the measured voltage. These can be seen in the function's *INFO* menu.

© Arcteq Relays Ltd
IM00021

Name	Description
Bus dead	No voltages.
Bus Live VTS Ok	All of the voltages are within the set limits.
Bus Live VTS Ok SEQ Rev	All of the voltages are within the set limits BUT the voltages are in a reversed sequence.
Bus Live VTS Ok SEQ Undef	Voltages are within the set limits BUT the sequence cannot be defined.
Bus Live VTS problem	Any of the VTS pick-up conditions are met.

Read-only parameters

The function's *Info* page displays useful, real-time information on the state of the protection function. It is accessed either through the device's HMI display, or through the setting tool software when it is connected to the device and its Live Edit mode is active.

Table. 4.6.2 - 329. Information displayed by the function.

Name	Range	Step	Description
VTS LN behaviour	• On • Blocked • Test • Test/Blocked • Off	-	Displays the mode of VTS block. This parameter is visible only when *Allow setting of individual LN mode* is enabled in *General* menu.
VTS condition	• Normal • Start • VTLinefail • VTBusfail • Blocked	-	Displays status of the monitoring function.
Bus voltages	• Bus dead • Bus Live VTS Ok SEQ Ok • Bus Live VTS Ok SEQ Rev • Bus Live VTS Ok SEQ Undef • Bus Live VTS problem	-	Displays the status of bus voltages.
Expected operating time	0.000...1800.000s	0.005s	Displays the expected operating time when a fault occurs.
Time remaining to trip	-1800.000...1800.000s	0.005s	When the function has detected a fault and counts down time towards a operation, this displays how much time is left before operation occurs.

Function blocking

The blocking signal is evaluated at the start of each program cycle. The blocking signals are connected to the function's dedicated input, which can be configured in the *IO → Blocking Input Control* tab of the function.

- If the blocking signal is not activated when the pick-up element activates, the function proceeds to the time characteristics calculation.
- If the blocking input signal is active when the pick-up element activates, a BLOCKED signal is generated and the function does not process the situation further.
- If a fault condition has been detected before the blocking signal, it resets and the release time characteristics are processed similarly to when the fault condition has been cleared.

The blocking signal needs to reach the device minimum of 5 ms before the set operating delay has passed in order for the blocking to activate in time.

Operating time characteristics for activation

This function supports definite time delay (DT). For detailed information on these delay types please refer to the chapter "General properties of a protection function" and its section "Operating time characteristics".

Events and registers

The voltage transformer supervision function (abbreviated "VTS" in event block names) generates events and registers from the status changes in the events listed below. The user can select which event messages are stored in the main event buffer: ON, OFF, or both. The events triggered by the function are recorded with a time stamp.

The function's outputs can be used for direct I/O controlling and user logic programming. The function also provides a resettable cumulative counter for the START, ALARM BUS, ALARM LINE and BLOCKED events.

Table. 4.6.2 - 330. Event messages.

Event block name	Event names
VTS1	Bus VT fail Start ON/OFF
VTS1	Bus VT fail Trip ON/OFF
VTS1	Bus VT fail Block ON/OFF
VTS1	Line VT fail ON/OFF
VTS1	Bus Fuse fail ON/OFF
VTS1	Line Fuse fail ON/OFF

The function registers its operation into the last twelve (12) time-stamped registers. The register of the function records the ON event process data for ACTIVATED, BLOCKED, etc. The table below presents the structure of the function's register content.

Table. 4.6.2 - 331. Register content.

Register	Description
Date and time	dd.mm.yyyy hh:mm:ss.mss
Event	Event name

© Arcteq Relays Ltd
IM00021

Register	Description
Volt 1, 2, 3, 4 status	• No voltage • Voltage OK • Low voltage
System status	• Bus dead • Bus live, VTS OK, Seq. OK • Bus live, VTS OK, Seq. reversed • Bus live, VTS OK, Seq. undefined • Bus live, VTS fault
Input A, B, C, D angle diff	0.00...360.00deg
Trip time remaining	Time remaining to alarm 0...1800s
Setting group in use	Setting group 1...8 active

4.6.3 Circuit breaker wear monitoring

The circuit breaker wear function is used for monitoring the circuit breaker's lifetime and its maintenance needs caused by interrupting currents and mechanical wear. The function uses the circuit breaker's manufacturer-supplied data for the breaker operating cycles in relation to the interrupted current magnitudes.

Figure. 4.6.3 - 196. Example of the circuit breaker interrupting life operations.

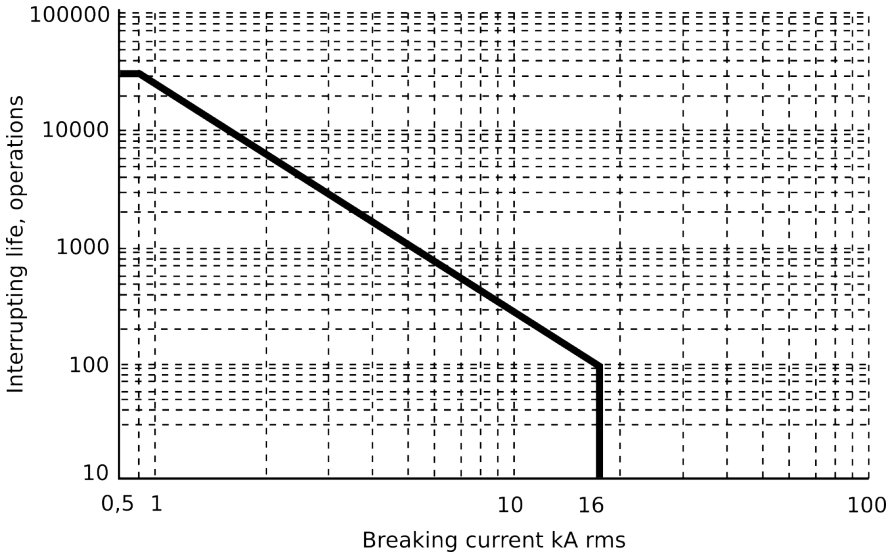

The function is triggered from the circuit breaker's "Open" command output and it monitors the three-phase current values in both the tripping moment and the normal breaker opening moment. The maximum value of interrupting life operations for each phase is calculated from these currents. The value is cumulatively deducted from the starting operations starting value. The user can set up two separate alarm levels, which are activated when the value of interrupting life operations is below the setting limit. The "Trip contact" setting defines the output that triggers the current monitoring at the breaker's "Open" command.

Figure. 4.6.3 - 197. Simplified function block diagram of the circuit breaker wear function.

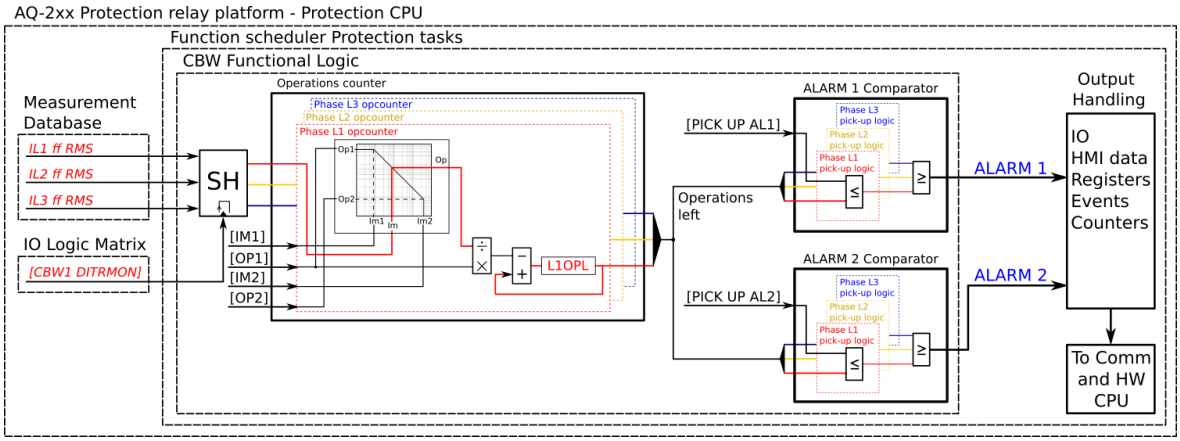

Measured input

The function block uses fundamental frequency component of phase current measurement values.

Table. 4.6.3 - 332. Measurement inputs of the circuit breaker wear function.

Signal	Description
I_{L1}RMS	Fundamental frequency component of phase L1 (A) current
I_{L2}RMS	Fundamental frequency component of phase L2 (B) current
I_{L3}RMS	Fundamental frequency component of phase L3 (C) current

General settings

The following general settings define the general behavior of the function. These settings are static i.e. it is not possible to change them by switching the setting group.

Table. 4.6.3 - 333. General settings.

Name	Range	Default	Description
CBW LN mode	• On • Blocked • Test • Test/ Blocked • Off	On	Set mode of CBW block. This parameter is visible only when *Allow setting of individual LN mode* is enabled in *General* menu.
CBW force status to	• Normal • Alarm1 On • Alarm2 On	Normal	Force the status of the function. Visible only when *Enable stage forcing* parameter is enabled in *General* menu.
CBW in side	• Side 1 • Side 2	Side 1	Defines which current measurement module is used by the function.

© Arcteq Relays Ltd
IM00021

Circuit breaker characteristics settings

The circuit breaker characteristics are set by two operating points, defined by the nominal breaking current, the maximum allowed breaking current and their respective operation settings. This data is provided by the circuit breaker's manufacturer.

Table. 4.6.3 - 334. Settings for circuit breaker characteristics.

Name	Range	Step	Default	Description
Operations 1	0…200 000	1	50 000	The number of interrupting life operations at the nominal current (Close - Open).
Operations 2	0…200 000	1	100	The number of interrupting life operations at the rated breaking current (Open).
Current 1 (I_{nom})	0…100.00kA	0.01kA	1kA	The rated normal current (RMS).
Current 2 (I_{max})	0…100.00kA	0.01kA	20kA	The rated short-circuit breaking current (RMS).

Pick-up settings

For the alarm stages Alarm 1 and Alarm 2, the user can set the pick-up level for the number of operations left. The pick-up setting is common for all phases and the alarm stage picks up if any of the phases goes below this setting.

Table. 4.6.3 - 335. Pick-up settings.

Name	Range	Default	Description
Alarm 1	• Disabled • Enabled	Disabled	Enable and disable the Alarm 1 stage.
Alarm 1 Set	0…200 000	1 000	Defines the pick-up threshold for remaining operations. When the number of remaining operations is below this setting, the ALARM 1 signal is activated.
Alarm 2	• Disabled • Enabled	Disabled	Enable and disable the Alarm 2 stage.
Alarm 2 Set	0…200 000	100	Defines the pick-up threshold for remaining operations. When the number of remaining operations is below this setting, the ALARM 2 signal is activated.

Setting example

Let us examine the settings, using a low-duty vacuum circuit breaker as an example. The image below presents the technical specifications provided by the manufacturer, with the data relevant to our settings highlighted in red:

Rated voltage, kV	24
Rated current, A	800
Rated power frequency test voltage, kV	50
Rated frequency, Hz	50/60
Rated impulse test voltage, kV peak	125
Partial discharge level at 1,1 rated voltage kV, pC	<10
Rated short-circuit breaking current, kA	16
Rated short-circuit making current, kA peak	41.5
Short time withstand current, 4s, kA	16
Mechanical life, CO cycles, not less than	30,000
Interrupting life operations, not less than	
at rated current	30,000
at breaking current	100
at other currents	see Fig.41
Closing time, ms, not more than	35
Opening time, ms, not more than	15
Breaking time, ms, not more than	25
Main contact resistance, µOhm, not more than	40
Maximum ambient temperature, C°	+55
Minimum ambient temperature, C°	-40
Design class (according to IEC 60932)	1
Electrical endurance class at rated IEEE/IEC duty	E2
Mechanical endurance class at rated IEEE/IEC duty	M2
Capacitive current switching class	C2
"Mechanical vibration and shock withstand capability, IEC 60721, IEC 60068"	Class 4M4
Maximum altitude above sea level, m	3000*
Maximum humidity, non condensing	98 %
Weight, kg - LD_1	35
Weight, kg - LD_6	55

Now, we set the stage as follows:

Parameter	Setting
Current 1	0.80 kA
Operation 1	30 000 operations
Current 2	16.00 kA
Operations 2	100 operations
Enable Alarm 1	Enabled
Alarm 1 Set	1000 operations
Enable Alarm 2	Enabled
Alarm 2 Set	100 operations

© Arcteq Relays Ltd
IM00021

With these settings, Alarm 1 is issued when the cumulative interruption counter for any of the three phases dips below the set 1000 remaining operations ("Alarm 1 Set"). Similarly, when any of the counters dips below 100 remaining operations, Alarm 2 is issued.

Read-only parameters

The function's *Info* page displays useful, real-time information on the state of the protection function. It is accessed either through the device's HMI display, or through the setting tool software when it is connected to the device and its Live Edit mode is active.

Table. 4.6.3 - 336. Information displayed by the function.

Name	Range	Description
CBW LN behaviour	• On • Blocked • Test • Test/ Blocked • Off	Displays the mode of CBW block. This parameter is visible only when *Allow setting of individual LN mode* is enabled in *General* menu.
CBW condition	• Normal • Alarm1 On • Alarm2 On	Displays the status of the function.
Breaker operations	-	Cumulative counter of "open" operations.
Alarm 1 counter	-	Alarm 1 operation counter.
Alarm 2 counter	-	Alarm 2 operation counter.
L1 Operations left	-	Operations left for phase L1.
L2 Operations left	-	Operations left for phase L2.
L3 Operations left	-	Operations left for phase L3.

Events and registers

The circuit breaker wear function (abbreviated "CBW" in event block names) generates events and registers from the status changes in the events listed below. The user can select which event messages are stored in the main event buffer: ON, OFF, or both. The function's outputs can be used for direct I/O controlling and user logic programming. The events triggered by the function are recorded with a time stamp.

The function also provides a resettable cumulative counter for the "Open" operations as well as the ALARM 1 and ALARM 2 events.

Table. 4.6.3 - 337. Event messages.

Event block name	Event names
CBW1	CBWEAR1 Triggered
CBW1	CBWEAR1 Alarm 1 ON/OFF
CBW1	CBWEAR1 Alarm 2 ON/OFF

The function registers its operation into the last twelve (12) time-stamped registers. The register of the function records the ON event process data. The table below presents the structure of the function's register content.

Table. 4.6.3 - 338. Register content.

Register	Description
Date and time	dd.mm.yyyy hh:mm:ss.mss
Event	Event name
Trigger current	Phase currents on trigger time
Deducted Op	L1/L2/L3 Deducted operations from the cumulative sum
Operations left	L1/L2/L3 Operations left

4.6.4 Current total harmonic distortion (THD)

The total harmonic distortion (THD) function is used for monitoring the content of the current harmonic. The THD is a measurement of the harmonic distortion present, and it is defined as the ratio between the sum of all harmonic components' powers and the power of the fundamental frequency (RMS).

Harmonics can be caused by different sources in electric networks such as electric machine drives, thyristor controls, etc. The function's monitoring of the currents can be used to alarm of the harmonic content rising too high; this can occur when there is an electric quality requirement in the protected unit, or when the harmonics generated by the process need to be monitored.

The function constantly measures the phase and residual current magnitudes as well as the harmonic content of the monitored signals up to the 31st harmonic component. When the function is activated, the measurements are also available for the mimic and the measurement views in the HMI carousel. The user can also set the alarming limits for each measured channel if the application so requires.

The monitoring of the measured signals can be selected to be based either on an amplitude ratio or on the above-mentioned power ratio. The difference is in the calculation formula (as shown below):

© Arcteq Relays Ltd
IM00021

Figure. 4.6.4 - 198. THD calculation formulas.

$$THD_P = \frac{{I_{x2}}^2 + {I_{x3}}^2 + {I_{x4}}^2 \dots {I_{x31}}^2}{{I_{x1}}^2}$$

, where
I = measured current,
x= measurement input,
n = harmonic number

$$THD_A = \sqrt{\frac{{I_{x2}}^2 + {I_{x3}}^2 + {I_{x4}}^2 \dots {I_{x31}}^2}{{I_{x1}}^2}}$$

, where
I = measured current,
x= measurement input,
n = harmonic number

While both of these formulas exist, the power ratio (*THDP*) is recognized by the IEEE, and the amplitude ratio (*THDA*) is recognized by the IEC.

Figure. 4.6.4 - 199. Simplified function block diagram of the total harmonic distortion monitor function.

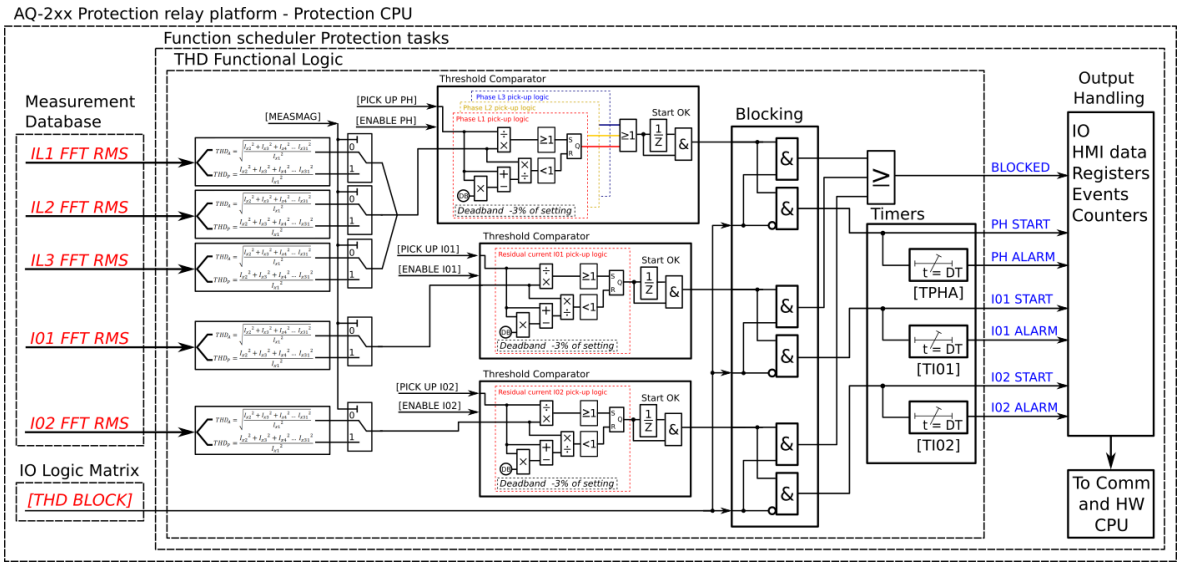

Measured input

The function block uses phase and residual current measurement channels. The function always uses FFT measurement of the whole harmonic specter of 32 components from each measured current channel. From these measurements the function calculates either the amplitude ratio or the power ratio.

Table. 4.6.4 - 339. Measurement inputs of the total harmonic distortion monitor function.

Signal	Description
I_{L1}FFT	FFT measurement of phase L1 (A) current
I_{L2}FFT	FFT measurement of phase L2 (B) current
I_{L3}FFT	FFT measurement of phase L3 (C) current
I_{01}FFT	FFT measurement of residual I01 current
I_{02}FFT	FFT measurement of residual I02 current

The selection of the calculation method is made with a setting parameter (common for all measurement channels).

General settings

The following general settings define the general behavior of the function. These settings are static i.e. it is not possible to change them by editing the setting group.

Table. 4.6.4 - 340. General settings.

Name	Range	Default	Description
THD> LN mode	• On • Blocked • Test • Test/ Blocked • Off	On	Set mode of THD block. This parameter is visible only when *Allow setting of individual LN mode* is enabled in *General* menu.
THD> in side	• CT1 • CT2	CT1	Defines which current measurement module the function uses.
Measurement magnitude	• Amplitude • Power	Amplitude	Defines which available measured magnitude the function uses.

Pick-up settings

The $Phase_{THD}$, $I01_{THD}$and $I02_{THD}$ setting parameters control the the pick-up and activation of the function. They define the maximum allowed measured current THD before action from the function. Before the function activates alarm signals, their corresponding pick-up elements need to be activated with the setting parameters *Enable phase THD alarm*, *Enable I01 THD alarm* and *Enable I02 THD alarm*. The function constantly calculates the ratio between the setting values and the calculated THD for each of the three phases. The reset ratio of 97 % is built into the function and is always relative to the setting value. The setting value is common for all measured phases. When the calculated THD exceeds the pick-up value (in single, dual or all phases), it triggers the pick-up operation of the function.

Setting group selection controls the operating characteristics of the function, i.e. the user or user-defined logic can change function parameters while the function is running.

Table. 4.6.4 - 341. Pick-up settings.

Name	Range	Step	Default	Description
Enable phase THD alarm	• Enabled • Disabled	-	Enabled	Enables and disables the THD alarm function from phase currents.
Enable I01 THD alarm	• Enabled • Disabled	-	Enabled	Enables and disables the THD alarm function from residual current input I01.

© Arcteq Relays Ltd
IM00021

Name	Range	Step	Default	Description
Enable I02 THD alarm	• Enabled • Disabled	-	Enabled	Enables and disables the THD alarm function from residual current input I02.
Phase THD pick-up	0.10…100.00%	0.01%	10.00%	The pick-up setting for the THD alarm element from the phase currents. At least one of the phases' measured THD value has to exceed this setting in order for the alarm signal to activate.
I01 THD pick-up	0.10…100.00%	0.01%	10.00%	The pick-up setting for the THD alarm element from the residual current I01. The measured THD value has to exceed this setting in order for the alarm signal to activate.
I02 THD pick-up	0.10…100.00%	0.01%	10.00%	The pick-up setting for the THD alarm element from the residual current I02. The measured THD value has to exceed this setting in order for the alarm signal to activate.

Read-only parameters

The function's *Info* page displays useful, real-time information on the state of the protection function. It is accessed either through the device's HMI display, or through the setting tool software when it is connected to the device and its Live Edit mode is active.

Table. 4.6.4 - 342. Information displayed by the function.

Name	Range	Description
THD> LN behaviour	• On • Blocked • Test • Test/ Blocked • Off	Displays the mode of THD block. This parameter is visible only when *Allow setting of individual LN mode* is enabled in *General* menu.
THD condition	• Normal • Start • Alarm • Blocked	Displays status of the monitoring function.

Function blocking

The blocking signal is evaluated at the start of each program cycle. The blocking signals are connected to the function's dedicated input, which can be configured in the *IO → Blocking Input Control* tab of the function.

- If the blocking signal is not activated when the pick-up element activates, a START signal is generated and the function proceeds to the time characteristics calculation.
- If the blocking signal is active when the pick-up element activates, a BLOCKED signal is generated and the function does not process the situation further.
- If the START signal has been activated before the blocking input signal, START signal resets, BLOCKED signal is generated, and the release time characteristics are processed similarly to when the pick-up signal is reset.

The blocking signal needs to reach the device minimum of 5 ms before the set operating delay has passed in order for the blocking to activate in time.

Operating time characteristics for activation and reset

This function supports definite time delay (DT). The following table presents the setting parameters for the function's time characteristics.

Table. 4.6.4 - 343. Settings for operating time characteristics.

Name	Range	Step	Default	Description
Phase THD alarm delay	0.000…1800.000s	0.005s	10.000s	Defines the delay for the alarm timer from the phase currents' measured THD.
I01 THD alarm delay	0.000…1800.000s	0.005s	10.000s	Defines the delay for the alarm timer from the residual current I01's measured THD.
I02 THD alarm delay	0.000…1800.000s	0.005s	10.000s	Defines the delay for the alarm timer from the residual current I02's measured THD.

Events and registers

The total harmonic distortion monitor function (abbreviated "THD" in event block names) generates events and registers from the status changes in the events listed below. The user can select which event messages are stored in the main event buffer: ON, OFF, or both. The events triggered by the function are recorded with a time stamp.

The function's outputs can be used for direct I/O controlling and user logic programming. The function also provides a resettable cumulative counter for the START, ALARM and BLOCKED events.

Table. 4.6.4 - 344. Event messages.

Event block name	Event names
THD1	THD Start Phase ON/OFF
THD1	THD Start I01 ON/OFF
THD1	THD Start I02 ON/OFF
THD1	THD Alarm Phase ON/OFF
THD1	THD Alarm I01 ON/OFF
THD1	THD Alarm I02 ON/OFF
THD1	Blocked ON/OFF

The function registers its operation into the last twelve (12) time-stamped registers. The register of the function records the ON event process data for START, ALARM and BLOCKED. The table below presents the structure of the function's register content.

Table. 4.6.4 - 345. Register content.

Register	Description
Date and time	dd.mm.yyyy hh:mm:ss.mss
Event	Event name

© Arcteq Relays Ltd
IM00021

Register	Description
L1h, L2h, L3h Fault THD	Start/Alarm THD of each phase.
Setting group in use	Setting group 1...8 active.

4.6.5 Voltage total harmonic distortion (THD)

The voltage total harmonic distortion (THD) function is used for monitoring the content of the voltage harmonic. The THD is a measurement of the harmonic distortion present, and it is defined as the ratio between the sum of all harmonic components' powers and the power of the fundamental frequency (RMS).

Harmonics can be caused by different sources in electric networks such as electric machine drives, thyristor controls, etc. The function's monitoring of the voltage can be used to alarm of the harmonic content rising too high; this can occur when there is an electric quality requirement in the protected unit, or when the harmonics generated by the process need to be monitored.

The function constantly measures the phase voltage magnitudes as well as the harmonic content of the monitored signals up to the 31st harmonic component. The user can set the alarming limits if the application so requires.

The monitoring of the measured signals can be selected to be based either on an amplitude ratio or on the above-mentioned power ratio. The difference is in the calculation formula (as shown below):

Figure. 4.6.5 - 200. THD calculation formulas.

$$THD_P = \frac{{U_{x2}}^2 + {U_{x3}}^2 + {U_{x4}}^2 \dots {U_{x31}}^2}{{U_{x1}}^2}$$

, where
U = measured voltage,
x= measurement input,
n = harmonic number

$$THD_A = \sqrt{\frac{{U_{x2}}^2 + {U_{x3}}^2 + {U_{x4}}^2 \dots {U_{x31}}^2}{{U_{x1}}^2}}$$

, where
U = measured voltage,
x= measurement input,
n = harmonic number

While both of these formulas exist, the power ratio (*THDP*) is recognized by the IEEE, and the amplitude ratio (*THDA*) is recognized by the IEC.

Figure. 4.6.5 - 201. Simplified function block diagram of the total harmonic distortion monitor function.

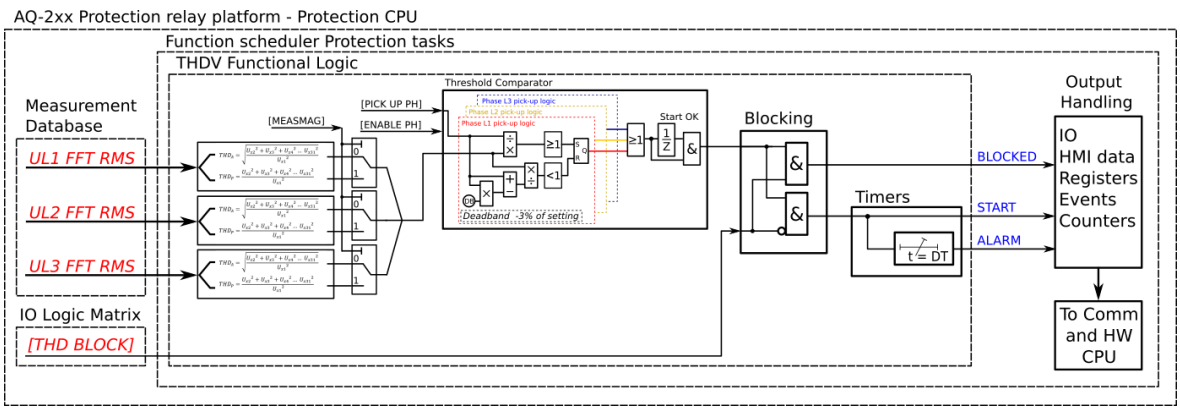

Measured input

The function block uses analog voltage measurement values. The function always uses FFT measurement of the whole harmonic specter of 32 components from each measured voltage channel. From these measurements the function calculates either the amplitude ratio or the power ratio.

Table. 4.6.5 - 346. Measurement inputs of the total harmonic distortion monitor function.

Signal	Description
U_1FFT	FFT measurement of U_1/V voltage channel
U_2FFT	FFT measurement of U_2/V voltage channel
U_3FFT	FFT measurement of U_3/V voltage channel

The selection of the calculation method is made with a setting parameter (common for all measurement channels).

General settings

The following general settings define the general behavior of the function. These settings are static i.e. it is not possible to change them by editing the setting group.

Table. 4.6.5 - 347. General settings.

Name	Range	Default	Description
THDV> LN mode	• On • Blocked • Test • Test/ Blocked • Off	On	Set mode of THDV block. This parameter is visible only when *Allow setting of individual LN mode* is enabled in *General* menu.
Measurement magnitude	• Amplitude • Power	Amplitude	Defines which available measured magnitude the function uses.

Pick-up settings

The THDV pick-up setting parameter controls the the pick-up and activation of the function. They define the maximum allowed measured voltage THD before action from the function. Before the function activates alarm signals, their corresponding pick-up elements need to be activated with the setting parameter *Enable THD alarm*. The function constantly calculates the ratio between the setting values and the calculated voltage THD. The reset ratio of 97 % is built into the function and is always relative to the setting value. The setting value is common for all measured phases. When the calculated THD exceeds the pick-up value (in single, dual or all phases), it triggers the pick-up operation of the function.

Setting group selection controls the operating characteristics of the function, i.e. the user or user-defined logic can change function parameters while the function is running.

© Arcteq Relays Ltd
IM00021

Table. 4.6.5 - 348. Pick-up settings.

Name	Range	Step	Default	Description
Enable THDV alarm	• Enabled • Disabled	-	Enabled	Enables and disables the THD alarm function.
THDV pick-up	0.10…100.00%	0.01%	10.00%	The pick-up setting for the THD alarm element from the phase voltages. At least one of the phases' measured THD value has to exceed this setting in order for the alarm signal to activate.

Read-only parameters

The function's *Info* page displays useful, real-time information on the state of the protection function. It is accessed either through the device's HMI display, or through the setting tool software when it is connected to the device and its Live Edit mode is active.

Table. 4.6.5 - 349. Information displayed by the function.

Name	Range	Description
THDV> LN behaviour	• On • Blocked • Test • Test/ Blocked • Off	Displays the mode of THDV block. This parameter is visible only when *Allow setting of individual LN mode* is enabled in *General* menu.
THDV condition	• Normal • Start • Alarm • Blocked	Displays status of the monitoring function.

Function blocking

The blocking signal is evaluated at the start of each program cycle. The blocking signals are connected to the function's dedicated input, which can be configured in the *IO → Blocking Input Control* tab of the function.

- If the blocking signal is not activated when the pick-up element activates, a START signal is generated and the function proceeds to the time characteristics calculation.
- If the blocking signal is active when the pick-up element activates, a BLOCKED signal is generated and the function does not process the situation further.
- If the START signal has been activated before the blocking input signal, START signal resets, BLOCKED signal is generated, and the release time characteristics are processed similarly to when the pick-up signal is reset.

The blocking signal needs to reach the device minimum of 5 ms before the set operating delay has passed in order for the blocking to activate in time.

Operating time characteristics for activation and reset

This function supports definite time delay (DT). The following table presents the setting parameters for the function's time characteristics.

Table. 4.6.5 - 350. Settings for operating time characteristics.

Name	Range	Step	Default	Description
THDV alarm delay	0.000…1800.000s	0.005s	10.000s	Defines the delay for the alarm timer from the phase voltages' measured THD.

Events and registers

The voltage total harmonic distortion monitor function (abbreviated "THDV" in event block names) generates events and registers from the status changes in the events listed below. The user can select which event messages are stored in the main event buffer: ON, OFF, or both. The events triggered by the function are recorded with a time stamp.

The function's outputs can be used for direct I/O controlling and user logic programming. The function also provides a resettable cumulative counter for the START, ALARM and BLOCKED events.

Table. 4.6.5 - 351. Event messages.

Event block name	Event names
THDV1	Voltage THD Start ON/OFF
THDV1	Voltage THD Alarm ON/OFF
THDV1	Voltage Blocked ON/OFF

The function registers its operation into the last twelve (12) time-stamped registers. The register of the function records the ON event process data for START, ALARM and BLOCKED. The table below presents the structure of the function's register content.

Table. 4.6.5 - 352. Register content.

Register	Description
Date and time	dd.mm.yyyy hh:mm:ss.mss
Event	Event name
UL1, UL2, UL3 THDV	Start/Alarm Voltage THD of each phase.
Setting group in use	Setting group 1...8 active.

4.6.6 Running hour counter

The running hour counter (abbreviated "RHC" in event block names) is capable of counting the running time of a motor, a generator, or a similar application.

The counter value can be added to the mimic view and read to SCADA.

© Arcteq Relays Ltd
IM00021

Table. 4.6.6 - 353. Parameter descriptions

Name	Range	Description
Activate counter input	Any binary input	Counter runs whenever input set here is active.
Running hours	hh:mm:ss	Indicates running hours counted so far. This value can be edited by the user. The user input must be set in seconds, which is then converted by the device to hours, minutes and seconds (hh:mm:ss).
Start count	0...4294967295 Starts	Start counter.
Clear hours	• - • Clear	Clears "Running hours" and "Start count".

The function (abbreviated "RHC" in event block names) generates events from the status changes in the events listed below. The user can select which event messages are stored in the main event buffer: ON, OFF, or both. The events triggered by the function are recorded with a time stamp.

Table. 4.6.6 - 354. Event messages.

Event block name	Event name
RHC1	Running hour counter ON/OFF
RHC1	Running hour counter cleared ON/OFF

4.6.7 Measurement recorder

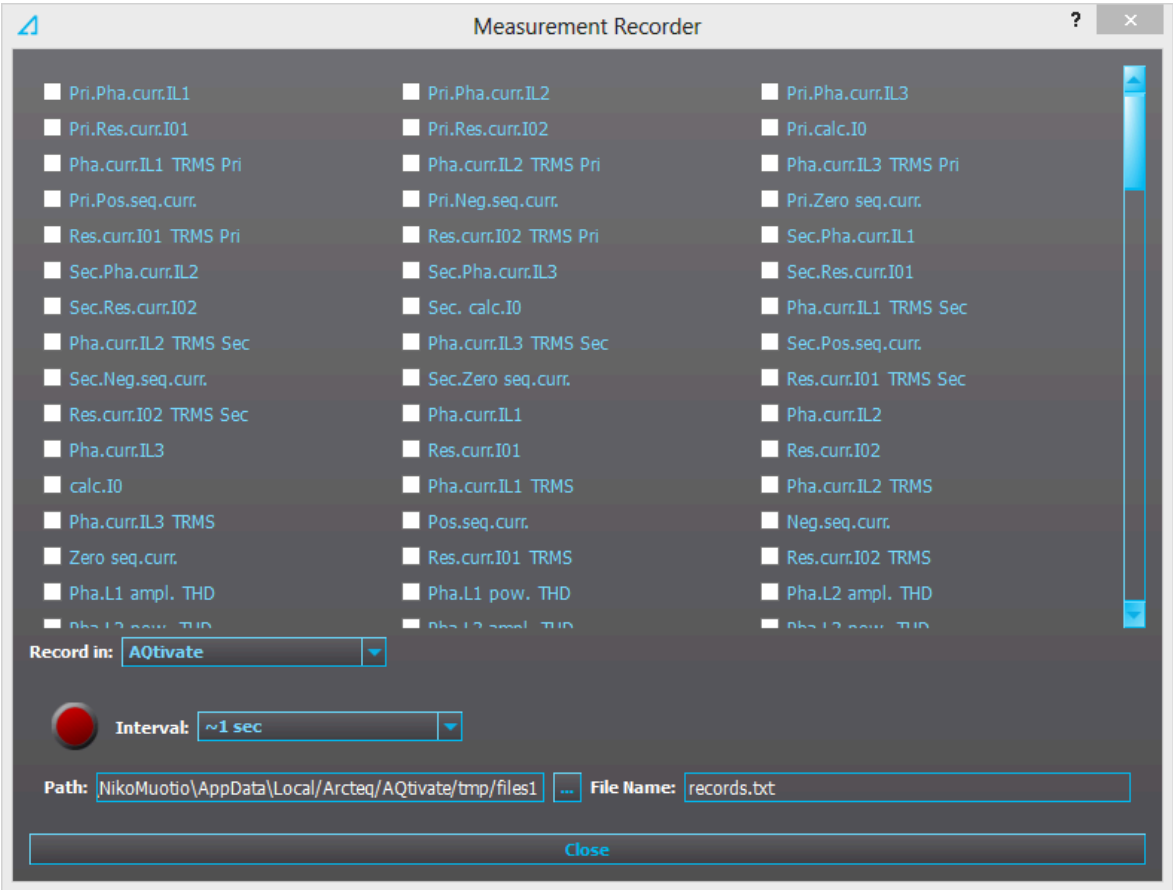

Measurements can be recorded to a file with the measurement recorder. The chosen measurements are recorded at selected intervals. In the "Measurement recorder" window, the measurements the user wants to be recorded can be selected by checking their respective check boxes. In order for the measurement recorder to activate, a connection to a device must be established via the setting tool software and its Live Edit mode must be enabled (see the setting tool manual for more information). Navigate to the measurement recorder through *Tools → Miscellaneous tools → Measurement recorder*. The recording interval can be changed from the "Interval" drop-down menu. From the "Record in" drop-down menu the user can also choose whether the measurements are recorded in the setting tool or in the device.

If the recording is done in the setting tool, both the setting tool software and its Live Edit mode have to be activated. The user can change the recording file location by editing the "Path" field. File names can also be changed with the "File name" field. Hitting the "Record" button (the big red circle) starts the recorder. Please note that closing the "Measurement recorder" window does not stop the recording; that can only be done by hitting the "Stop" button (the big blue circle).

4.6.8 Fault register

The fault register function records the value of the selected magnitudes at the time of a pre-defined trigger signal. A typical application is the recording of fault currents or voltages at the time of the breaker trips; it can also be used to record the values from any trigger signal set by the user. The user can select whether the function records per-unit values or primary values. Additionally, the user can set the function to record overcurrent fault types or voltage fault types. The function operates instantly from the trigger signal.

The fault register function has an integrated fault display which shows the current fault values when the tripped by one of the following functions:

© Arcteq Relays Ltd
IM00021

- I> (non-directional overcurrent)
- I2> (current unbalance)
- Idir> (directional overcurrent)
- I0> (non-directional earth fault)
- I0dir> (directional earth fault)
- f<(underfrequency)
- f> (overfrequency)
- U< (undervoltage)
- U> (overvoltage)
- U1/U2 >/< (sequence voltage)
- U0> (residual voltage)
- P> (over power)
- P< (under power)
- Prev> (reverse power)
- T> (thermal overload)

Figure. 4.6.8 - 202. 12 latest recordings can be accessed from HMI if "VrecRegisters" view has been enabled in "Carousel designer" tool.

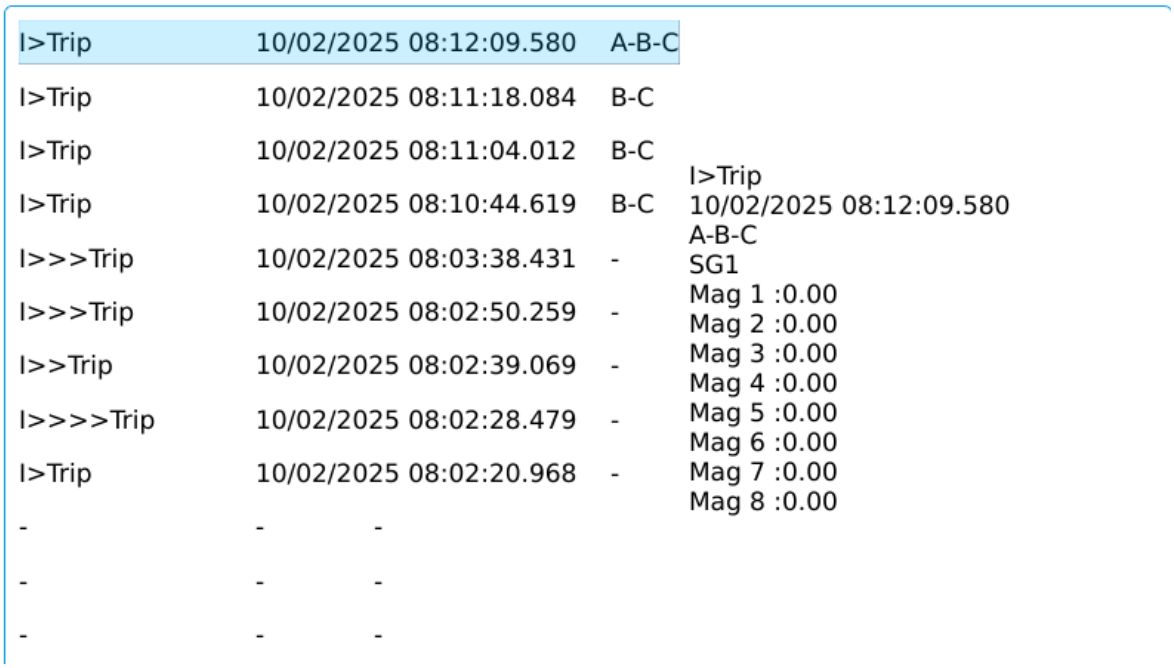

Measured input

The function block uses analog current and voltage measurement values. Based on these values, the device calculates the primary and secondary values of currents, voltages, powers, and impedances as well as other values.

The user can set up to eight (8) magnitudes to be recorded when the function is triggered. An overcurrent fault type, a voltage fault type, and a tripped stage can be recorded and reported straight to SCADA.

NOTICE!
The available measurement values depend on the device type. If only current analog measurements are available, the recorder can solely use signals which only use current. The same applies, if only voltage analog measurements are available.

Table. 4.6.8 - 355. Current based measurements available.

Currents	Description
IL1 (ff), IL2 (ff), IL3 (ff), I01 (ff), I02 (ff)	The fundamental frequency current measurement values (RMS) of phase currents and of residual currents.
IL1TRMS, IL2TRMS, IL3TRMS, I01TRMS, I02TRMS	The TRMS current measurement values of phase currents and of residual currents.
IL1,2,3 & I01/I02 2nd h., 3rd h., 4th h., 5th h., 7th h., 9th h., 11th h., 13th h., 15th h., 17th h., 19th h.	The magnitudes of phase current components: Fundamental, 2nd harmonic, 3rd harmonic, 4th harmonic, 5th harmonic 7th, harmonic 9th, harmonic 11th, harmonic 13th, harmonic 15th, harmonic 17th, harmonic 19th harmonic current.
I1, I2, I0Z	The positive sequence current, the negative sequence current and the zero sequence current.
I0CalcMag	The residual current calculated from phase currents.
IL1Ang, IL2Ang, IL3Ang, I01Ang, I02Ang, I0CalcAng, I1Ang, I2Ang	The angles of each measured current.

Table. 4.6.8 - 356. Voltage based measurements available.

Voltages	Description
UL1Mag, UL2Mag, UL3Mag, UL12Mag, UL23Mag, UL31Mag U0Mag, U0CalcMag	The magnitudes of phase voltages, of phase-to-phase voltages, and of residual voltages.
U1 Pos.seq V mag, U2 Neg.seq V mag	The positive sequence voltage and the negative sequence voltage.
UL1Ang, UL2Ang, UL3Ang, UL12Ang, UL23Ang, UL31Ang U0Ang, U0CalcAng	The angles of phase voltages, of phase-to-phase voltages, and of residual voltages.
U1 Pos.seq V Ang, U2 Neg.seq V Ang	The positive sequence angle and the negative sequence angle.

Table. 4.6.8 - 357. Power based measurements available.

Powers	Description
S3PH, P3PH, Q3PH	The three-phase apparent, active and reactive powers.
SL1, SL2, SL3, PL1, PL2, PL3, QL1, QL2, QL3	The phase apparent, active and reactive powers.
tanfi3PH, tanfiL1, tanfiL2, tanfiL3	The tan (φ) of three-phase powers and phase powers.
cosfi3PH, cosfiL1, cosfiL2, cosfiL3	The cos (φ) of three-phase powers and phase powers.

Table. 4.6.8 - 358. Impedance and admittance based measurements available.

Impedances and admittances	Description

© Arcteq Relays Ltd
IM00021

RL12, RL23, RL31 XL12, XL23, XL31, RL1, RL2, RL3 XL1, XL2, XL3 Z12, Z23, Z31 ZL1, ZL2, ZL3	The phase-to-phase and phase-to-neutral resistances, reactances and impedances.
Z12Ang, Z23Ang, Z31Ang, ZL1Ang, ZL2Ang, ZL3Ang	The phase-to-phase and phase-to-neutral impedance angles.
Rseq, Xseq, Zseq RseqAng, XseqAng, ZseqAng	The positive sequence resistance, reactance and impedance values and angles.
GL1, GL2, GL3, G0 BL1, BL2, BL3, B0 YL1, YL2, YL3, Y0	The conductances, susceptances and admittances.
YL1angle, YL2angle, YL3angle Y0angle	The admittance angles.

Table. 4.6.8 - 359. Other measurements available.

Others	Description
System f.	The tracking frequency in use at that moment.
Ref f1	The reference frequency 1.
Ref f2	The reference frequency 2.
M thermal T	The motor thermal temperature.
F thermal T	The feeder thermal temperature.
T thermal T	The transformer thermal temperature.
RTD meas 1…16	The RTD measurement channels 1…16.
Ext RTD meas 1…8	The external RTD measurement channels 1…8 (ADAM module).

Reported values

When triggered, the function holds the recorded values of up to eight channels, as set. In addition to this tripped stage, the overcurrent fault type and the voltage fault types are reported to SCADA.

Table. 4.6.8 - 360. Reported values.

Name	Range	Description
Tripped stage	• - • I> Trip • I>> Trip • I>>> Trip • I>>>> Trip • IDir> Trip • IDir>> Trip • IDir>>> Trip • IDir>>>> Trip • U> Trip • U>> Trip • U>>> Trip • U>>>> Trip • U< Trip • U<< Trip • U<<< Trip • U<<<< Trip • I0> TRIP • I0>> Trip • I0>>> Trip • I0>>>> Trip • I0Dir> Trip • I0Dir>> Trip • I0Dir>>> Trip • I0Dir>>>> Trip • f> Trip • f>> Trip • f>>> Trip • f>>>> Trip • f< Trip • f<< Trip • f<<< Trip • f<<<< Trip • P> Trip • P< Trip • Prev> Trip • T> Trip • I2> Trip • I2>> Trip • I2>>> Trip • I2>>>> Trip • U1/2 > Trip • U1/2 >> Trip • U1/2 >>> Trip • U1/2 >>>> Trip • U0> Trip • U0>> Trip • U0>>> Trip • U0>>>> Trip	The tripped stage.
Overcurrent fault type	• A-G • B-G • A-B • C-G • A-C • B-C • A-B-C	The overcurrent fault type.

© Arcteq Relays Ltd
IM00021

Name	Range	Description
Voltage fault type	• A(AB) • B(BC) • A-B(AB-BC) • C(CA) • A-C(AB-CA) • B-C(BC-CA) • A-B-C • Overfrequency • Underfrequency • Overpower • Underpower • Reversepower • Thermal overload • Unbalance • Harmonic overcurrent • Residual overvoltage	The voltage fault type.
Magnitude 1…8	0.000…1800.000 A/V/p.u.	The recorded value in one of the eight channels.

Events

The fault register function (abbreviated "VREC" in event block names) generates events from the status changes in the events listed below. The user can select which event messages are stored in the main event buffer: ON, OFF, or both. The events triggered by the function are recorded with a time stamp.

Table. 4.6.8 - 361. Event messages.

Event block name	Event name
VREC1	Recorder triggered ON/OFF

4.6.9 Event logger

Event logger records status changes of protection functions, digital inputs, logical signals etc. Events are recorded with a timestamp. The time stamp resolution is 1 ms. Up to 15 000 events can be stored at once. When 15 000 events have been recorded, the event history will begin to remove the oldest events to make room for new events. You can find more information about event masks in the selected function's "Events" tab. Event masks determine what is recorded into the event history; they are configured in each function's individual settings in the *Protection*, *Control* and *Monitoring* menu. Event history is accessible with PC setting tool (*Tools → Events and Logs → Event history*) and from the device HMI if "Events" view has been configured with Carousel designer in PC setting tool.

Event overload detection

Continuous generation of a high number of nuisance events may have adverse effects on the operation and communication capabilities of the device. A high number of nuisance events may end up being generated due to mistakes in configuration and/or installation. For example, mistakes in logic configuration or RTD sensor wiring, in conjunction with suitable event mask settings may generate an excessive number of unintended events. Event overload detector looks for a condition where over 200 events are being generated inside one (1) second window (more than 1 event every 5 milliseconds on average). If such a condition is detected, further events are blocked and an IRF (Internal Relay Fault-message) is issued. The event blocking is released and the IRF can be cleared after 5 seconds if the overload condition has been corrected. Other device operations, such as protection and communication, remain available even during the event overload condition.

4.6.10 Disturbance recorder (DR)

The disturbance recorder is a high-capacity (64 MB permanent flash memory) and fully digital recorder integrated to the protection relay. The maximum sample rate of the recorder's analog channels is 64 samples per cycle. Up to 20 analog recording channels and 96 digital channels are supported. Maximum capacity of recordings is 100.

The recorder provides an effective tool to analyze the performance of the power system during network disturbance situations. The recorder's output is in general COMTRADE format and it is compatible with most recording viewers and injection devices. The files are based on the IEEE standard C37.111-1999. Captured recordings can be injected as playback with secondary testing tools that support the COMTRADE file format. Playback of files might help to analyze the fault, or can be simply used for educational purposes.

Analog and digital recording channels

Table. 4.6.10 - 362. Analog recording channels.

Signal	Description
IL1	Phase current I_{L1}
IL2	Phase current I_{L2}
IL3	Phase current I_{L3}
I01c	Residual current I_{01} coarse*
I01f	Residual current I_{01} fine*
I02c	Residual current I_{02} coarse*
I02f	Residual current I_{02} fine*
IL1”	Phase current I_{L1} (CT card 2)
IL2”	Phase current I_{L2} (CT card 2)
IL3”	Phase current I_{L3} (CT card 2)
I01”c	Residual current I_{01} coarse* (CT card 2)
I01”f	Residual current I_{01} fine* (CT card 2)
I02”c	Residual current I_{02} coarse* (CT card 2)
I02”f	Residual current I_{02} fine* (CT card 2)
U1(2)VT1	Line-to-neutral U_{L1} or line-to-line voltage U_{L12} (VT card 1)
U2(3)VT1	Line-to-neutral U_{L2} or line-to-line voltage U_{L23} (VT card 1)
U3(1)VT1	Line-to-neutral U_{L3} or line-to-line voltage U_{L31} (VT card 1)
U0(ss)VT1	Zero sequence voltage U_0 or synchrocheck voltage U_{SS} (VT card 1)
F tracked 1	Tracked frequency of reference 1
F tracked 2	Tracked frequency of reference 2

© Arcteq Relays Ltd
IM00021

Signal	Description
F tracked 3	Tracked frequency of reference 3
ISup	Current measurement module voltage supply supervision (CT card 1)
ISup"	Current measurement module voltage supply supervision (CT card 2)
USup	Voltage measurement module voltage supply supervision (VT card 1)
IL1'''	Phase current I_{L1} (CT card 3)
IL2'''	Phase current I_{L2} (CT card 3)
IL3'''	Phase current I_{L3} (CT card 3)
I01'''c	Residual current I_{01} coarse* (CT card 3)
I01'''f	Residual current I_{01} fine* (CT card 3)
I02'''c	Residual current I_{02} coarse* (CT card 3)
I02'''f	Residual current I_{02} fine* (CT card 3)
ISup_3	Current measurement module voltage supply supervision (CT card 3)
UL1(2)VT2	Line-to-neutral U_{L1} or line-to-line voltage U_{L12} (VT card 2)
UL2(3)VT2	Line-to-neutral U_{L2} or line-to-line voltage U_{L23} (VT card 2)
UL3(1)VT2	Line-to-neutral U_{L3} or line-to-line voltage U_{L31} (VT card 2)
U0(SS)VT2	Zero sequence voltage U_0 or synchrocheck voltage U_{SS} (VT card 2)
USup_2	Voltage measurement module voltage supply supervision (VT card 2)

*NOTE: There are two signals for each residual current channel in the disturbance recorder: coarse and fine. A coarse signal is capable of sampling in the full range of the current channel but suffers a loss of accuracy at very low currents. A fine signal is capable of sampling at very low currents and with high accuracy but cuts off at higher currents. Table below lists performance of both channels with fine and coarse gain.

Table. 4.6.10 - 363. Residual current channel performance with coarse or residual gain.

Channel	Coarse gain range	Fine gain range	Fine gain peak
I01	0...150 A	0...10 A	15 A
I02	0...75 A	0...5 A	8 A

Recording settings and triggering

Disturbance recorder can be triggered manually or automatically by using the dedicated triggers. Every signal listed in "Digital recording channels" can be selected to trigger the recorder.

The number of analog and digital channels together with the sample rate and the time setting affect the recording size. See calculation examples below in the section titled "Estimating the maximum length of total recording time". The recording size affects how many recordings can be stored at a time, but the number can't exceed 100 recordings.

Table. 4.6.10 - 364. Recorder control settings.

Name	Range	Description
Recorder enabled	• Enabled • Disabled	Enables and disables the disturbance recorder function.
Recorder status	• Recorder ready • Recording triggered • Recording and storing • Storing recording • Recorder full • Wrong config	Indicates the status of recorder. "Wrong config" is activated if: • "Pre-triggering time" is longer than "Max length of recording" setting • "Max amount of recordings" is "1" and "Recording mode" is "FIFO". • "1ms" digital channel sample rate is selected when analog channel sample rate is 8 or 16 s/c.
Clear record	$0\ldots2^{32}-1$	Clears selected recording. If "1" is inserted, first recording will be cleared from memory. If "10" is inserted, tenth (10th) recording will be cleared from memory.
Manual trigger	• - • Trig	Triggers disturbance recording manually. This parameter will return back to "-" automatically.
Clear all records	• - • Clear	Clears all disturbance recordings.
Clear newest record	• - • Clear	Clears the newest stored disturbance recording.
Clear oldest record	• - • Clear	Clears the oldest stored disturbance recording.
Max. number of recordings	0…100	Displays the maximum number of recordings that can be stored in the device's memory with settings currently in use. The maximum number of recordings can go up to 100.
Max. length of a recording	0.000...1800.000s	Displays the maximum length of a single recording.
Max. location of the pre-trigger	0.000...1800.000s	Displays the highest pre-triggering time that can be set with the settings currently in use.
Recordings in memory	0…100	Displays how many recordings are stored in the memory.

Table. 4.6.10 - 365. Recorder trigger setting.

Name	Description
Recorder trigger	Selects the trigger input(s). Clicking the "Edit" button brings up a pop-up window, and checking the boxes enable the selected triggers.

© Arcteq Relays Ltd
IM00021

Table. 4.6.10 - 366. Recorder settings.

Name	Range	Default	Description
Recording length	0.100...1800.000s	1s	Sets the length of a recording.
Recording mode	• FIFO • Keep olds	FIFO	Selects what happens when the memory is full. "FIFO" (= first in, first out) replaces the oldest stored recording with the latest one. "Keep olds" does not accept new recordings.
Analog channel samples	• 64s/c • 32s/c • 16s/c • 8s/c	64s/c	Selects the sample rate of the disturbance recorder in samples per cycle. The samples are saved from the measured wave according to this setting.
Digital channel samples	• 5 ms • 1 ms	5 ms	The fixed sample rate of the recorded digital channels. Recorded digital channels can be chosen with "Recorder digital channels" below. NOTE: 1 ms sample rate can't be used when analog channel sample rate is 8 or 16 s/c.
Pretriggering time	0.2...30.0s	0.2s	Sets the recording length before the trigger.
Analog recording CH1...CH20	0…8 freely selectable channels	-	Selects the analog channel for recording. Please see the list of all available analog channels in the section titled "Analog and digital recording channels".
Automatically get recordings	• Disabled • Enabled	Disabled	Enables and disables the automatic transfer of recordings. The recordings are taken from the device's protection CPU and transferred to the device's FTP directory in the communication CPU; the FTP client then automatically loads the recordings from the device and transfers them further to the SCADA system. Please note that when this setting is enabled, all new disturbance recordings will be pushed to the FTP server of the device. Up to six (6) recordings can be stored in the FTP at once. Once those six recordings have been retrieved and removed, more recordings will then be pushed to the FTP. When a recording has been sent to the FTP server of the device, it is no longer accessible through setting tools *Disturbance recorder → Get DR files* command.
Recorder digital channels	0…96 freely selectable channels	-	Selects the digital channel for recording. Please see the list of all available digital channels in the section titled "Analog and digital recording channels".

NOTICE!
The disturbance recorder is not ready unless the "Max. length of a recording" parameter is showing some value other than zero. At least one trigger input has to be selected in the "Recorder Trigger" setting to fulfill this term.

NOTICE!
When writing new disturbance recorder settings to the device, any existing recordings in the device memory will be deleted.

Estimating the maximum length of total recording time

Once the disturbance recorder's settings have been made and loaded to the device, the device automatically calculates and displays the total length of recordings. However, if the user wishes to confirm this calculation, they can do so with the following formula. Please note that the formula assumes there are no other files in the FTP that share the 64 MB space.

$$\frac{\text{Total sample reserve}}{(f_n * (Ch_{an} + 1) * SR) + (200\ Hz * Ch_{dig})}$$

Where:

- total sample reserve = the number of samples available in the FTP when no other files are saved; calculated by dividing the total number of available bytes by 4 bytes (=the size of one sample); e.g. 64 306 588 bytes/4 bytes = 16 076 647 samples.
- f_n = the nominal frequency (Hz).
- Ch_{an} = the number of analog channels recorded; "+ 1" stands for the time stamp for each recorded sample.
- SR = the selected sample rate (s/c).
- 200 Hz = the rate at which digital channels are always recorded, i.e. 5 ms.
- Ch_{dig} = the number of digital channels recorded.

For example, let us say the nominal frequency is 50 Hz, the selected sample rate is 64 s/c, nine (9) analog channels and two (2) digital channels record. The calculation is as follows:

$$\frac{16\ 076\ 647\ \text{samples}}{(50\ \text{Hz} * (9 + 1) * 64) + (200\ \text{Hz} * 2)} \approx 496\ \text{s}$$

Therefore, the maximum recording length in our example is approximately 496 seconds.

Application example

This chapter presents an application example of how to set the disturbance recorder and analyze its output. The recorder is configured by using the setting tool software or device HMI, and the results are analyzed with the AQviewer software (is automatically downloaded and installed with AQtivate). Registered users can download the latest tools from the Arcteq website (arcteq.fi./downloads/).

In this example, we want the recordings to be made according to the following specifications:

- the recording length is 6.0 s
- the sample rate is 64 s/c (therefore, with a 50 Hz system frequency a sample is taken every 312.5 µs)
- the analog channels 1...8 are used
- digital channels are tracked every 5 ms
- the first activation of the overcurrent stage trip (I> TRIP) triggers the recorder
- the pre-triggering time is 5 (ie. how long is recorded before the I> TRIP signal) and the post-triggering time is 1 s

The image below shows how these settings are placed in the setting tool.

© Arcteq Relays Ltd
IM00021

Figure. 4.6.10 - 203. Disturbance recorder settings.

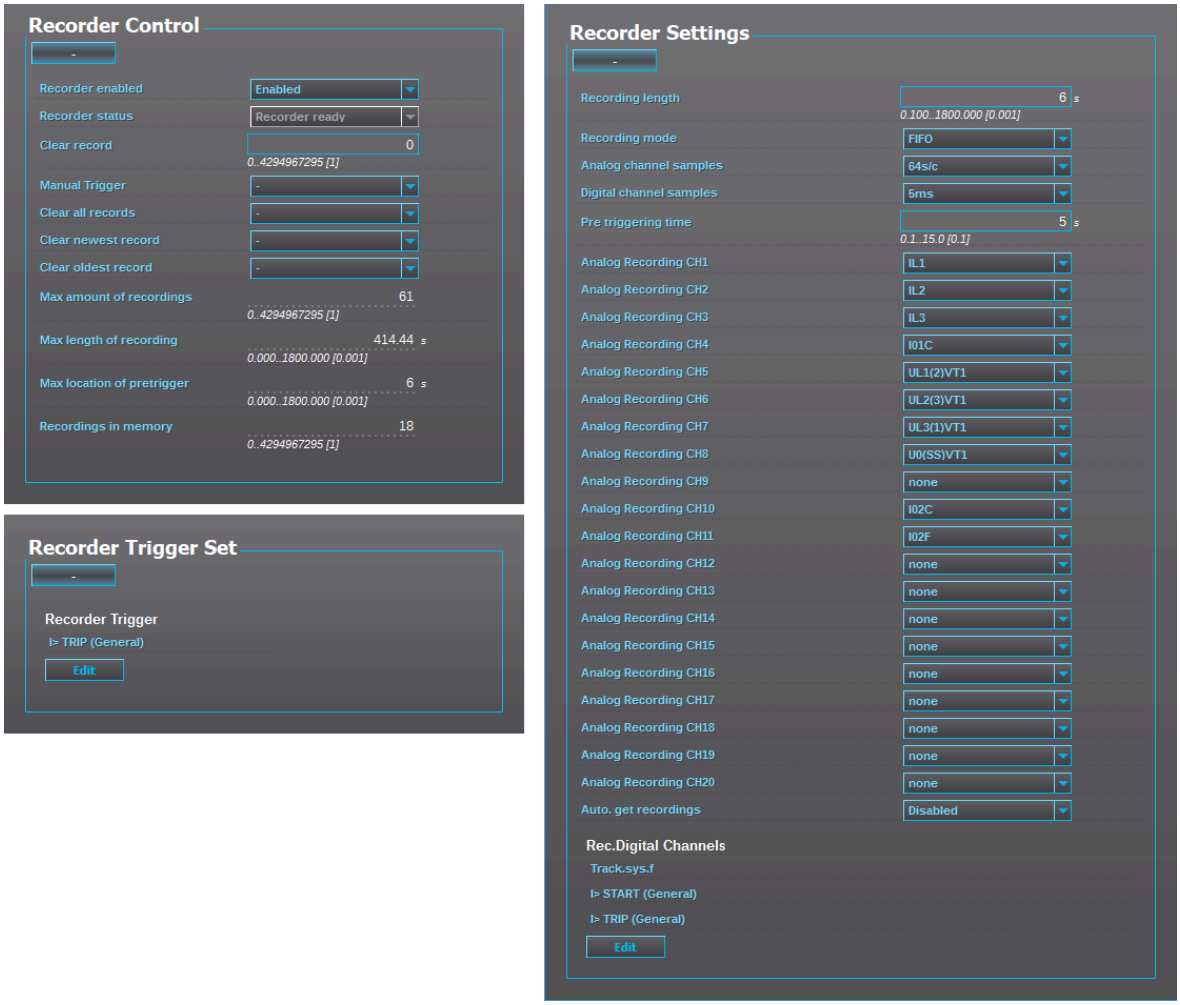

Figure. 4.6.10 - 204. Effects of recording length and pre-triggering time signals. This example is based on the settings shown above.

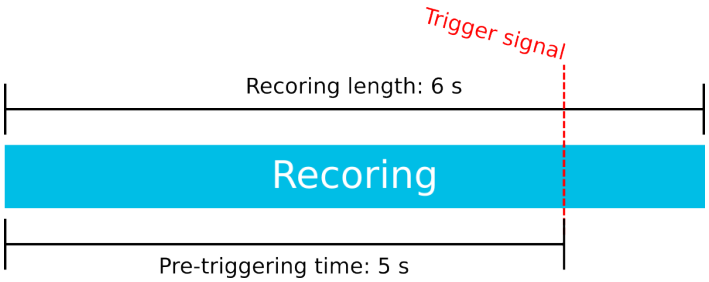

When there is at least one recording in the device's memory, that recording can be analyzed by using the AQviewer software (see the image below). However, the recording must first be made accessible to AQViewer. The user can read it from the device's memory (*Disturbance recorder → Get DR-files*). Alternatively, the user can load the recordings individually (*Disturbance recorder → DR List*) from a folder in the PC's hard disk drive; the exact location of the folder is described in *Tools → Settings → DR path*.

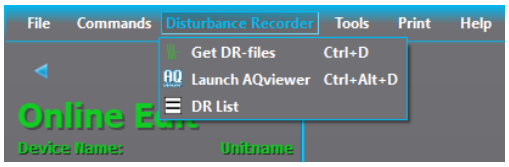

The user can also launch the AQviewer software from the *Disturbance recorder* menu. AQviewer software instructions can be found in AQtivate Instruction manual (https://www.arcteq.com/documents-and-software/).

Events

The disturbance recorder function (abbreviated "DR" in event block names) generates events and registers from the status changes in the events listed below. Events cannot be masked off. The events triggered by the function are recorded with a time stamp.

Table. 4.6.10 - 367. Event messages.

Event block name	Event names
DR1	Recorder triggered ON/OFF
DR1	Recorder memory cleared
DR1	Oldest record cleared
DR1	Recorder memory full ON/OFF
DR1	Recording ON/OFF
DR1	Storing recording ON/OFF
DR1	Newest record cleared

4.6.11 User access control

As a factory default, no user level is locked with a password in a device. In order to activate the different user levels, push the **Lock** button on the device's front panel and set the desired passwords for the user levels.

© Arcteq Relays Ltd
IM00021

Figure. 4.6.11 - 205. User access control view.

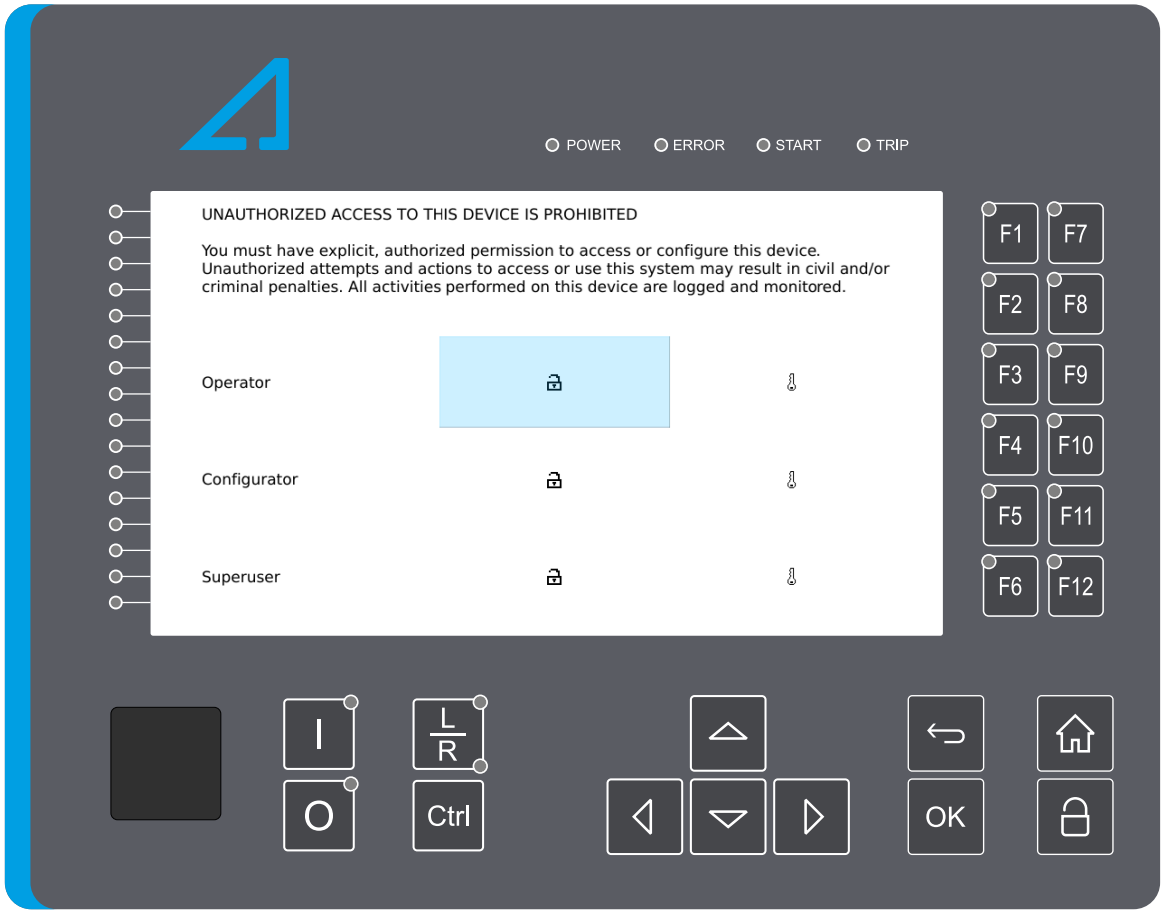

> **NOTICE!**
> Passwords can only be set locally in an HMI.

You can set a new password for a user level by selecting the key icon next to the user level's name. After this you can lock the user level by pressing the Return key while the lock is selected. If you need to change the password, you can select the key icon again and give a new password. To remove the password, set the password to "0" (zero). Please note that in order to do this the user level whose password is being changed must be unlocked.

As a general rule, access levels are divided into four categories:

- User: Can view all menus and settings but cannot modify settings or operate breakers or other equipment.
- Operator: Can view all menus and settings and operate breakers and other equipment, but cannot modify settings.
- Configurator: Can modify most settings, such as protection pickup levels, time delays, breaker control functions, and signal descriptions. Can also operate breakers and other equipment.
- Super User: Has full access to all settings and can operate breakers and other equipment.

The User access level provides the following permissions:

- Download the aqs file from the device.
- Download disturbance recordings.
- Read events.
- Retrieve the default IEC 61850 configuration file (.cid) from the device.
- Limited parameter writing permissions.

The **Operator** access level includes all **User** permissions, plus:

- All rights as "User" user level.
- Can operate circuit breakers, disconnectors and other equipment.

The **Configurator** access level includes all **Operator** permissions, plus:

- Configure logic, disturbance recorder, mimic diagrams, communications, alarms, measurement recorder, and timers.
- Read and clear the device log.
- Upload user language files.
- Set the device time and time zone.
- Modify most parameters. Critical settings, such as enabling or disabling protection functions, remain restricted.

The **Super User** access level includes all **Configurator** permissions, plus:

- Full read and write access to all parameters.
- Upgrade device firmware.
- Execute scripts on the device.
- Perform a factory reset.
- Clear event history.
- Upload security file (certificate, key, etc.).

When configuring the device parameters, the required user level is displayed below the parameter.

Figure. 4.6.11 - 206. Required user level is displayed below the parameter in HMI view.

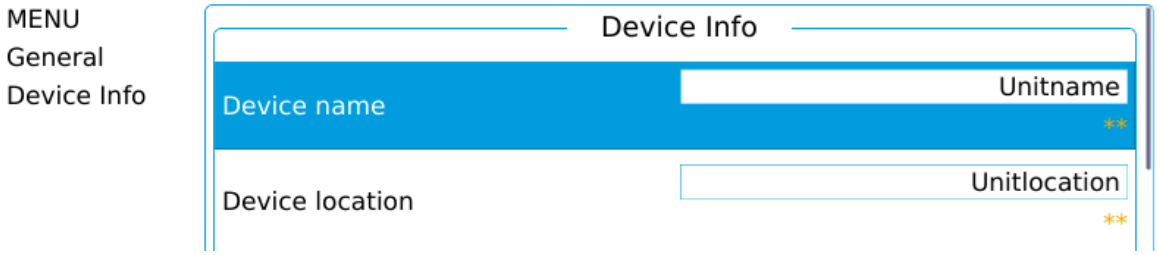

Within the AQtivate configuration software, users can choose whether the required user level is displayed together with the parameter. The user level can be opened in the *Commands → Login* menu. Currently open user level is displayed in the top bar of the software.

Advanced user access control settings

More detailed settings for user access can be found from *Monitoring → User Access Control* menu.

Table. 4.6.11 - 368. UAC settings.

Name	Range	Default	Description
Enable user group - Operator	• Enabled • Disabled	Enabled	Enables or disables "Operator" user group.
Enable user group - Configurator	• Enabled • Disabled	Enabled	Enables or disables "Configurator" user group.
Minimum password length	0…128	1	Sets the minimum character length for passwords.

© Arcteq Relays Ltd
IM00021

Name	Range	Default	Description
Number of fail attempts before lock	0…1000	3	Sets the number of failed attempts allowed before locking the user level.
Lock period after max fail attempts	0…86400000 s	0 s	Wait time after locking a user level.
HMI session period before logout	5…86400 s	900 s	Time delay for logging out in the HMI. Timer will start the countdown when there are no front panel button presses.
Setting tool session period before logout	5…86400 s	900 s	Time delay for logging out in the setting tool. Timer will start the countdown when there are no key presses or mouse movement.

Table. 4.6.11 - 369. UAC management.

Name	Range	Default	Description
Enable UAC management	• Enabled • Disabled	Disabled	If UAC has been enabled, the function will set default passwords for the user levels, if no passwords have been set. The function will also monitor if the passwords have been expired.
Enable default passwords	• Enabled • Disabled	Disabled	If enabled, user levels will use the default passwords, if no passwords have been set. The default passwords are: • Operator: Oper17 • Configurator: Conf12 • Super user: Supr98
Password change interval - Operator	0…1000 day(s)	0 day(s)	Required interval for changing passwords. If the password hasn't been changed on time, "Password expired" parameter will change to "True", diagnostic alarm will be activated and an entry to the audit log will be added.
Password change interval - Configurator	0…1000 day(s)	0 day(s)	
Password change interval - Superuser	0…1000 day(s)	0 day(s)	
Password expired - Operator	• False • True	-	If the password hasn't been changed before the "password change interval" has expired, this parameter will change to "True"
Password expired - Configurator	• False • True	-	
Password expired - Superuser	• False • True	-	

Name	Range	Default	Description
Default password unchanged - Operator	• False • True	-	Indicates if the user level is using the default password or a user configured password.
Default password unchanged - Configurator	• False • True	-	
Default password unchanged - Superuser	• False • True	-	
Password last changed - Operator	DD/MM/YYYY HH:mm:ss	-	Timestamp of the last time the password has been changed for the user level.
Password last changed - Configurator	DD/MM/YYYY HH:mm:ss	-	
Password last changed - Superuser	DD/MM/YYYY HH:mm:ss	-	

© Arcteq Relays Ltd

5 Generator and motor commander application

5.1 General

The Generator and motor commander consists of two hardware equipments: the AQ-G257 or AQ-M257 protection relay and the AQ-GC30 IGBT rectifier bridge.

The protection relay can be equipped with several I/O units, from current and voltage measurement to analog and digital I/Os as well as RTDs. The I/O can be adjusted according to the requirements of the project at hand and it can be used in forming numerous excitation and control applications. Additional functions, such as various synchronous motor starting arrangements and generator standby heating, can be easily programmed with the device's logic editor. The device can be used for both rotating and static exciters.

The AQ-GC30 IGBT rectifier bridge is used mainly with rotating exciters. AQ-GC30 is rated 30 A DC and its functions are integrated in an easy and user-friendly configuration within the device. The two units communicate with an optical high-speed bus. The optical bus and the thermal design of the IGBT rectifier bridge make it suitable for installation in the generator's terminal box.

AQ-GC30 can also be used a stand-alone addition with a hard-wired communication to any voltage regulator with a suitable interface, regardless of brand or make.

The rated data of the IGBT rectifier bridge module AQ-GC30 is as follows:

- 30 ADC (continuous)
- 60 ADC (for 10 seconds)
- Supply voltage 0…400 VDC (10…500 Hz)
- Ambient temperature 0…50 degrees °C (derating at 25 ºC, with 0.5 A/°C).

The I/O interface of AQ-GC30 consists of the following:

- 8 digital inputs, galvanically isolated in one group, 18…260 VDC
- 4 digital outputs, potential free relay contacts in two groups
- 1 analog input, 0…20 mA
- 1 analog input, 0…10 V
- optional: 6 RTDs (PT100)

The IGBT rectifier bridge module internally measures the IGBT's temperature, supply voltage, DC output voltage, and DC current. These values are transmitted to the device where the values can be either read or sent further by using various communication methods.

The measurement ranges are as follows:

- Current: 0…50 ADC
- Voltages: 0…500 VDC
- Temperature: 0…150 °C

5.1.1 Functions of the Generator commander

The diagram below presents all the main functions in the Generator commander. The excitation functions are described in detail in the following chapters, and a more detailed description of the protection functions can be found in the chapter titled "Functions" and its subchapter "Protection functions" in this manual.

Some functions, such as Synchronizer and Power system stabilizer, are optional. The basic function package can be later updated with a package that includes these optional functions.

Figure. 5.1.1 - 207. Main functions of the Generator commander.

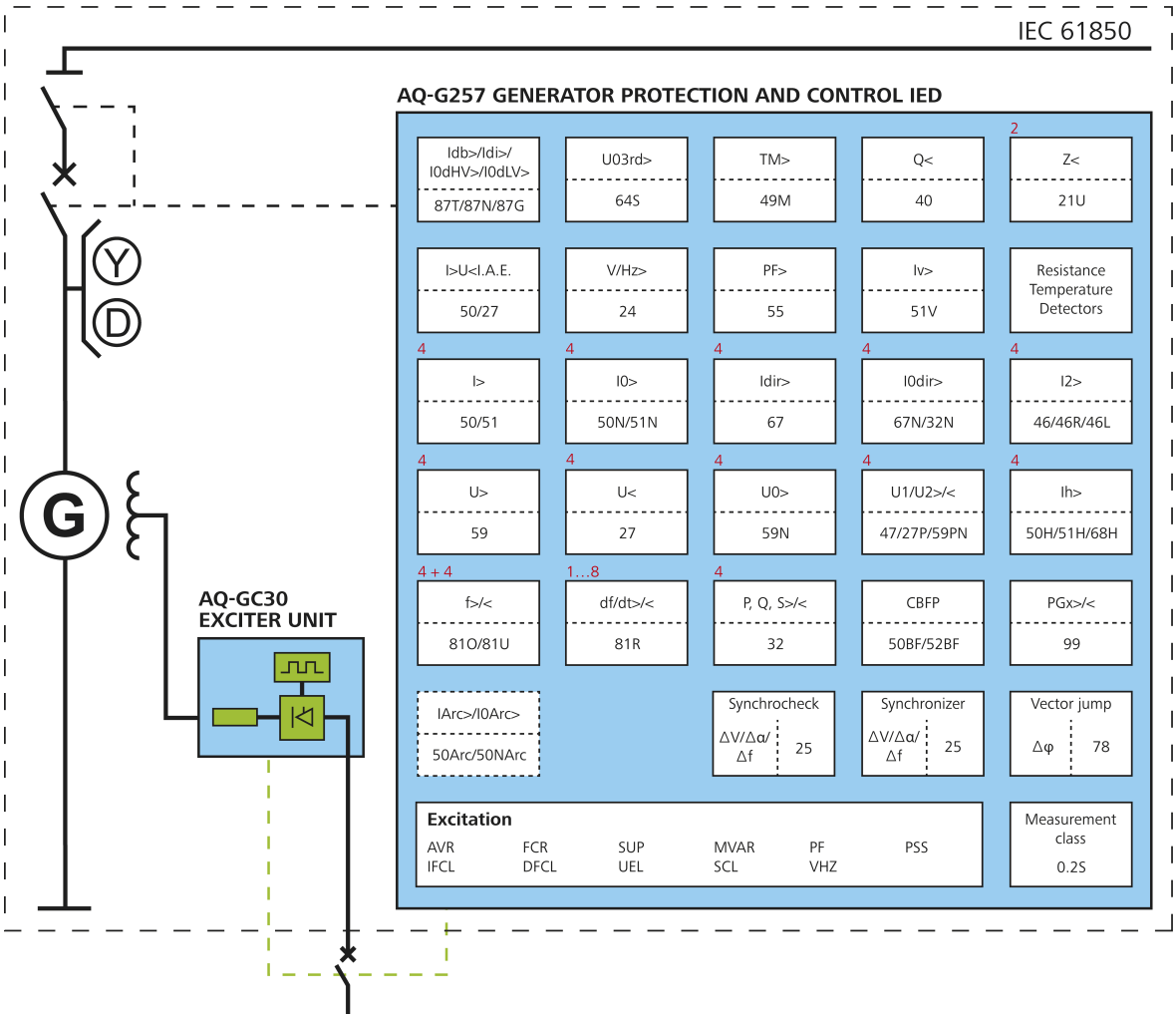

© Arcteq Relays Ltd
IM00021

5.1.2 Excitation functions

The AQ-G257's excitation functions perform several tasks, as presented in the table below. The protection relay and the IGBT rectifier bridge module share some additional functions between them.

Excitation

Control modes

AVR	FCR	MVAR	PF
Automatic voltage regulator	Field current regulator	Reactive power controller	Power factor controller

Exc. limiters

UEL	SCL	VHZL	SUP
Underexcitation limiter	Stator current limiter	Volts-per-hertz limiter	Voltage supervision

IFCL	DFCL	PSS
Instant field current limiter	Delayed field current limiter	Power system stabilizer

5.1.3 Exciter unit dimensions

Figure. 5.1.3 - 208. Exciter unit – side view.

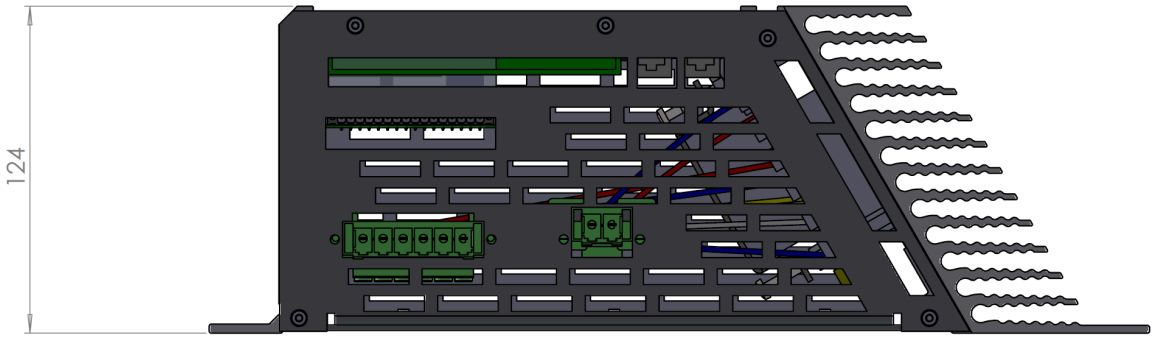

Figure. 5.1.3 - 209. Exciter unit – front view.

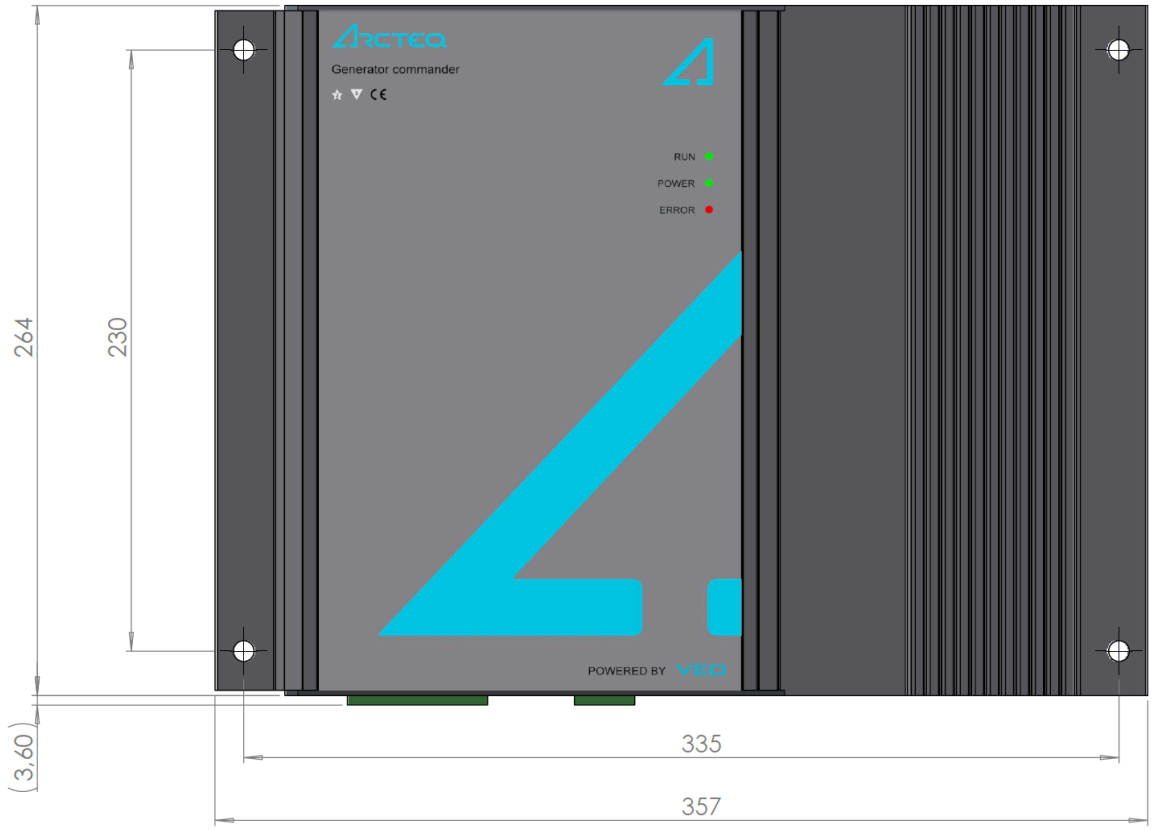

5.1.4 Exciter unit connections

Figure. 5.1.4 - 210. Connection diagram.

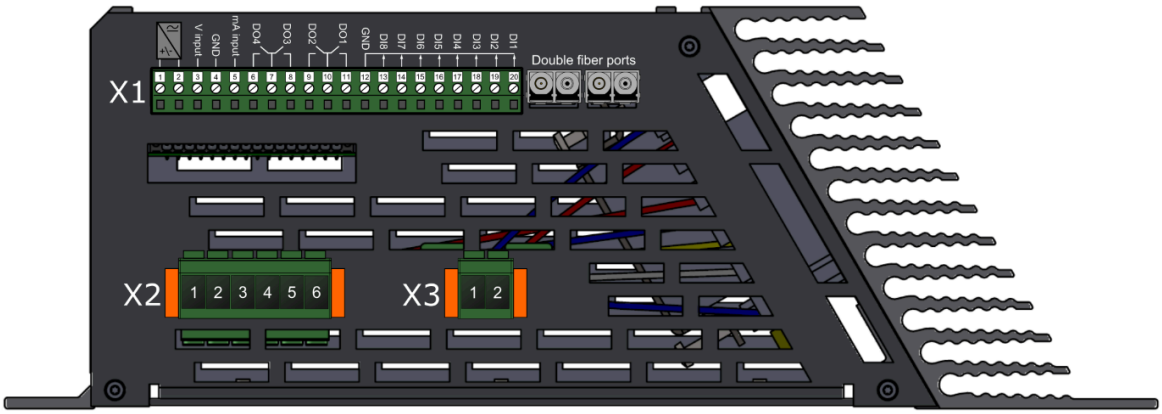

Table. 5.1.4 - 370. Connector descriptions.

Connector	Description
X1:1	Power supply - connector
X1:2	Power supply + connector
X1:3	Voltage input (0…10 V)

© Arcteq Relays Ltd
IM00021

Connector	Description
X1:4	Earth for the voltage input and the mA input
X1:5	mA input
X1:6	Digital output 4 (DO4)
X1:7	DO3 and DO4 common
X1:8	Digital output 3 (DO3)
X1:9	Digital output 2 (DO2)
X1:10	DO2 and DO1 common
X1:11	Digital output 1 (DO1)
X1:12	Earth for the digital inputs 1…8
X1:13-20	Digital inputs 1…8
X2:1	U phase voltage input
X2:2	V phase voltage input
X2:3	W phase voltage input
X2:4	DC- (backup supply)
X2:5	Discharge (MUST BE SHORTED X2:6)
X2:6	DC+ (backup supply)
X3:1-2	Field winding

5.2 Function descriptions

5.2.1 Protection and supervision

5.2.1.1 Excitation setting parameters

The excitation operation is defined by the following settings:

- General settings (including the generator, field data, and power circuit parameters)
- Voltage supervision
- Control modes (AVR, FCR, MVAR, PF)
- Limiters (IFCL, DFCL, UEL, SCL, V/Hz)
- Power system stabilizer

This chapter gives a detailed description of the general settings. The other settings can be found in their respective chapters: please refer to Chapter "Voltage supervision" for voltage supervision settings, to Chapter "Excitation control modes" for the control mode settings, to Chapter "Excitation limiters" for the limiter settings, and to Chapter "Power system stabilizer" for PSS settings.

NOTICE!
The parameter "Excitation control mode" in the excitation general settings must be set to "Activated" in order for the user to have access to nearly all Field data and Power circuit parameters.

General settings

Table. 5.2.1.1 - 371. General settings.

Name	Range	Step	Default	Description
Excitation control mode	• Disabled • Activated	-	Disabled	Activates and disables the Generator commander's excitation module.
Commands to rectifier bridge(s)	• Disabled • Enabled	-	Disabled	Indicates whether the Generator commander is connected to or disconnected from the rectifier bridge(s).
VLAN-PRIORITY (Commander to bridge)	0…7	1	4	Defines the virtual LAN priority channel for communication with the AQ-GC30 rectifier unit.
VLAN-ID (Commander to bridge)	0×0…0×FFF	0×1	0×0 or 0×FFF (single system) 0×1 (2-channel system, Channel 1) 0×2 (2-channel system, Channel 2)	Defines the virtual LAN ID address for communication with the AQ-GC30 rectifier unit.
Excitation current measurement from	• CT1 (3ph HV) • CT2 (3ph LV)	-	CT2 (3ph LV)	Selects the machine current measurement source. With "CT1 (3ph HV)" the excitation current is measured from Side 1 (e.g. the machine supply side, or the block transformer' HV side). With "CT2 (3ph LV)" the excitation current is measured from Side 2 (e.g. the machine's star point side).
Power measurement currents from	• CT1 • CT2 • CT3	-	CT1	Selects which current transformer module channel is used to measure power. This value is used for the entire Generator commander. CT1 measures powers from Side 1 (e.g. the machine supply side, or the block transformer's HV side. CT2 measures powers from Side 2 (e.g. the machine's star point side). Option "CT3" can be used when the device has three (3) current measurement cards.
Full or single-phase current measurement	• Three-phase current measurement • Single-phase current measurement	-	Three-phase current measurement	Selects whether the powers are measured from a single-phase current or from a three-phase current. This value is used for the entire Generator Commander. When the "Single-phase current measurement" option is selected, you can use the "Single-phase current measured from" parameter to define the specific phase for the measuring.

© Arcteq Relays Ltd
IM00021

Name	Range	Step	Default	Description
Single-phase current measured from	• All phases • IL1 CT • IL2 CT • IL3 CT • I01 CT IL1 • I01 CT IL2 • I01 CT IL3 • I02 CT IL1 • I02 CT IL2 • I02 CT IL3	-	All phases	If "Single-phase current measurement" was selected for the "Full or single-phase current measurement" parameter, this parameter is used to select the specific channel from which the powers are measured from. If "All phases" is selected, the powers are measured from IL1, IL2 and IL3. If "ILx CT" is selected, the powers are measured from that phase channel, from the side defined with the "Excitation current measurement from" parameter. If "I0x CT ILx" is selected, the powers are measured from the I0x channel, from the side defined with the "Excitation current measurement from" parameter. ILx refers to the phase current (Lx) that is connected to this channel.
Force control signals on	• None • FCL On limit • UEL in operation • SCL Overexc. • SCL Underexc. • High I P alarm • Instant FCL on • Low supply voltage • FCR Mode on • AVR Mode On • Low meas. voltage on • IGBT shorted on • PWM enabled • Rectifier trip • Bridge 1 temp high • Bridge 2 temp high • Excitation On • Excitation Off • Overcurrent on	-	None	Forces the various control signals ON or OFF. Please note that this parameter is only used for testing purposes! Please note that this parameter is only visible when stage forcing has been enabled (*General* → *Device info* → "Enable stage forcing")!

Name	Range	Step	Default	Description
Force Indicator signals on	• None • Synchronized • Islandmode • Field breaker is open • Field breaker is closed • Field flashing on • Long field flashing on • Test mode is on • Phase retard on • Reset on • Command AVR on • Command FCR On • Command MVAR On • Command PF on • Excitation run order • Increase On • Decrease On • AVR Bus on • FCR Bus on • MVAR Bus On • PF Bus On • Overriding control on • AVR Ref on Low limit • AVR Ref on High limit • FCR ref on Low limit • FCR ref on High limit • None • VHZ limit active • Process panel activated • Parameters activated • Bus activated • Reset and excitation off • Field breaker does not open • NewRef start • Generator breaker is closed	-	None	Forces the various indicator signals ON or OFF. Please note that this list has been separated into two parameters of the same name as there are quite a few options. Please note that this parameter is only used for testing purposes! Please note that this parameter is only visible when stage forcing has been enabled (*General* → *Device info* → "Enable stage forcing")!

© Arcteq Relays Ltd

Name	Range	Step	Default	Description
	• Fieldbreaker off Gen breaker on • Disturbed mode • Disturbed mode pulse • Following line voltage • Test square enabled • Order open Field breaker • Order close Field breaker • Q unloaded • MVAR ref on high limit • MVAR ref on low limit • PF ref on high limit • PF ref on low limit • AVR start reference • FCR start reference • Unload MVAR • MVAR mode on • PF mode on			

Table. 5.2.1.1 - 372. Generator parameters (GEN).

Name	Range	Step	Default	Description
Generator nominal MVA (S)	0.001…500.000MVA	0.001MVA	5.000MVA	Determines the generator's nominal apparent power.
Generator nominal voltage (Vt)	0.001…25.000kV	0.001kV	6.000kV	Determines the generator's nominal voltage.
System nominal frequency	7.000…75.000Hz	0.001Hz	50.000Hz	Determines the nominal frequency used by the system.
VT primary	1.0…1 000 000.0V	0.1V	20 000.0V	Determines the voltage in the primary of the voltage transformer.
VT secondary	0.2…400.0V	0.1V	100.0V	Determines the voltage in the secondary of the voltage transformer.
Phase CT primary	1.000…25 000.000A	0.001A	100.000A	Determines the phase current in the primary of the current transformer.

Name	Range	Step	Default	Description
Phase CT secondary	0.200…10.000A	0.001A	5.000A	Determines the phase current in the primary of the current transformer.
ILx polarity	• - • Invert	-	-	Allows the user to invert the polarity of the selected phase current (IL1, IL2, IL3).

Table. 5.2.1.1 - 373. Field data parameters (FLD).

Name	Range	Step	Default	Description
No-load field current	0.1…3000.00A (DC)	0.01A (DC)	10.00A (DC)	Displays the value of the field current with which the idling generator voltage and frequency are nominal. This figure can be attained from the generator manual, by measuring it, or by reading it from the panel (the "Excitation current") when the generator has both nominal voltage and nominal frequency. You can calculate the per-unit values from this value.
Max. continuous field current	0.10…3000.00A (DC)	0.01A (DC)	20.00A (DC)	Displays the maximum allowed continuous field current. This value can be attained from the generator type plate, or from the data pages of the generator manual. With this value, the generator produces the nominal reactive power, while the active power and voltage are nominal. If the current exceeds this value, the delayed field current limiter is activated (please refer to the chapter "Delayed field current limiter" in this manual for more details).
Field forcing current	0.10…6000.00A (DC)	0.01A (DC)	40.00A (DC)	The maximum allowed momentary field current, which can be used to support the power network. If the current exceeds this value, the instantaneous field current limiter is activated (please refer to the chapter "Instantaneous field current limiter" in this manual for more details).
No-load field voltage at warm field winding	0.10…400.00V (DC)	0.01V (DC)	100.00V (DC)	Displays the voltage that is in effect over the warm field winding with a no-load field current. This value can be attained from the generator manual, or by measuring it from the excitation voltage when both the voltage and frequency are nominal.
Rated supply voltage to rectifier	0.00…1000.00V (AC)	0.01V (AC)	400.00V (AC)	Displays the rated supply voltage to the rectifier.
Power supply phases	• Three-phase AC supply • Single-phase AC supply	-	Three-phase AC supply	Selects the number of power supply phases.

© Arcteq Relays Ltd

Name	Range	Step	Default	Description
Rated back-up supply voltage to PWM	1…400V (DC)	1V (DC)	220V (DC)	The Generator commander can have a back-up voltage connected to it. This parameter defines the rated value of that back-up voltage.

Table. 5.2.1.1 - 374. Power circuit parameters (POW).

Name	Range	Step	Default	Description
Cooling fans	• Not included • Included	-	Not included	Defines whether or not cooling fans are included in the Generator commander.
Number of rectifiers	• Single • Redundant (1+1) • Redundant (n–1)	-	Single	Defines the number of rectifiers in use. In the 1-channel ("Single") system, only one channel is in use. In the "Redundant (1+1)" system there are two channels in use, allowing one channel to run, while the other channel remains idle. In the "Redundant (n–1)" system is meant for a static excitation system that has at least three thyristor bridges.
Bridge 2 start-up health check time	0…1800s	1s	30s	When a static excitation system has two thyristor bridges, the excitation can be started by one thyristor bridge and then run by another. This parameter determines the delay when changing to the second thyristor bridge for running the excitation. This setting is only visible when the "Number of rectifiers" parameter is not set to "Single".
Active bridge now	• A • B	-	-	Indicates which channel is active in the redundant system. This setting is only visible when the "Number of rectifiers" parameter is not set to "Single".
Field flashing	• Disabled • Enabled	-	Disabled	Defines whether or not the field flashing is used. Field flashing is normally used with shunt supply systems that have excitation supply coming from the generator main circuit though an excitation transformer. At field flashing, the DC current (with approximately 0.1 × no-load excitation current added to it) is fed to the excitation circuit to help raise the generator voltage at the start of the excitation.
Field flashing time-out	0…1800s	1s	10s	Defines the maximum time for field flashing. After this time has passed, the Generator commander indicates the long field flashing.
Field flashing off-level	0.00…1.00p.u.	0.01p.u.	0.10p.u.	Defines the excitation current level that, when exceeded, switches the field flashing off. Enter a per-unit value of the generator nominal voltage as the level.
Commanders in use	• Only this • Redundant	-	Only this	Selects the number of commanders to be used in the excitation.

5.2.1.2 Voltage supervision

The voltage supervision monitors the measured voltage, and initiates a fast change-over from the AVR mode to the FCR mode when a failure occurs. It operates when the negative voltage component is over 50 % of the positive voltage component, indicating a loss of at least one phase. The voltage supervision is blocked when the negative current component is over 50 % of the positive current component, indicating that the measured voltage is low due to a grid disturbance.

Voltage supervision is used for supervising both the generator measuring voltage and the excitation supply voltage.

Supply voltage supervision is active, when the differential supervision ("Positive sequence measuring voltage" – "Supply voltage actual value" > 0.2 p.u.) and the generator are on the grid and supervision is enabled.

Measuring voltage supervision is active, when...

- ... the 1st route is enabled, voltages are synchronized, there is no overcurrent ("Negative sequence measuring voltage"/"Positive sequence measuring voltage" > "Voltage high ratio"; "Positive sequence measuring voltage" > 0.1 p.u.; "Negative sequence phase current"/"Positive sequence phase current" < "Current low ratio" or "Positive sequence phase current" < 0.1 p.u.) and supervision is enabled.
- ...the 2nd route, excitation start ("Positive sequence measuring voltage" < 0.1 p.u. and "Field current actual value" > "Field current level") and supervision are enabled.
- ...the 3rd route, differential supervision ("Positive sequence measuring voltage" – "Supply voltage actual value" < –0.2 p.u.) and supervision are enabled and the generator is on the grid.

Table. 5.2.1.2 - 375. Voltage supervision settings.

Name	Range	Step	Default	
General				
Voltage supervision	• Disabled • Enabled	-	Enabled	Enables and disables the voltage supervision.
Time delay	0.000…10.0s	0.005s	0.200s	Defines the trip time delay; that is, when either a low measuring voltage or a low supply voltage signal starts.
Voltage high ratio	0.000…10.0	0.005	0.3	Defines the ratio between the negative and positive sequence voltages.
Current low ratio	0.000…10.0	0.005	0.3	Defines the ratio between the negative and positive phase currents.
Field current level	0.000…10.0	0.005	1.0	Defines the triggering level for the field current.
GEN voltage (U1)	-500.00…500.00p.u./p.u.	0.01p.u.	0.00p.u.	Displays the generator voltage U1.
GEN voltage (U2)	-500.00…500.00p.u./p.u.	0.01p.u.	0.00p.u.	Displays the generator voltage U2.
Supply voltage	-500.00…500.00p.u./p.u.	0.01p.u.	0.00p.u.	Displays the supply voltage.
Field overcurrent				

© Arcteq Relays Ltd
IM00021

Name	Range	Step	Default	
Field overcurrent protection	• Disabled • Enabled	-	Disabled	Enables and disables the field overcurrent protection. The field overcurrent detection is achieved through comparison: when the control signal value is lower than the "Shorted IGBT low level detection threshold" parameter, field overcurrent is detected. Note that the instant field current limiter must be active.
Shorted IGBT low level detection threshold	0.00…25.00	0.01	1.00	Determines the comparison level for the control signal when the IGBT is shorted. The control signal reaches the low value when it keeps the field current at the instant field current limit.
Detection time delay	0.000…10.000s	0.005s	3.000s	Determines the trip time for the field overcurrent protection.
Open field				
Open field circuit monitoring	• Disabled • Enabled	-	Disabled	Enables and disables the monitoring of open circuits in the excitation winding. The supervision is triggered when the control signal exceeds the "Open field detection control signal high threshold" parameter, while the field current is below the "Open field detection field current low threshold" parameter. If open circuits are monitored and the above-mentioned parameter conditions are met (high threshold > I < low threshold), the Generator commander performs a rectifier trip and stops the excitation after the set time in the "Open field detection time delay" parameter.
Open field detection time delay	0.000…10.000s	0.005s	3.000s	Determines the time delay for the open field detection.
Open field detection control signal high threshold	0.00…25.00	0.01	1.00	Determines the high threshold for the open field detection control signal. If the current exceeds this threshold, one of the parameter conditions for open field detection is met.
Open field detection field current low threshold	0.00…25.00	0.01	0.10	Determines the low threshold for the open field detection's control signal. If the current does not exceed this threshold, one of the parameter conditions for open field detection is met.
Miscellaneous				
Alarm level for IGBT temperature	0…200	1	100	Determines the alarm level for the IGBT temperature. This supervision protects the insulated gate bipolar transistor (IGBT) of the AQ-GC30 rectifier unit from overheating. This supervision is always active.

Name	Range	Step	Default	
Internal tripping of field breaker	• Disabled • Enabled	-	Disabled	Enables and disables the internal tripping of the field breaker. When enabled, if the machine circuit control is open, an OFF signal from the selected field breaker runs down the excitation current and opens the field breaker once the set "Inverter mode time on stopping" has passed. The trip control is also supervised: if the field breaker is not open within the set "Open field breaker trip time" delay, the unit issues an event.
Open field breaker trip time	0.0…1800.0s	0.1s	0.5s	Determines the delay time between a TRIP signal and the field breaker's "Open" status.
Inverter mode time on stopping	0.0…10.0s	0.1s	1.0s	Determines the operation time to shut the converter down.
Open loop adjustment speed	0.00…1.00p.u./s	0.00p.u./s	0.02p.u./s	Determines the speed at which the control signal rises and falls when the "OpnLoopRef" option for the "Force OWM controlsignal" parameter is selected (can be found at *Excitation* → *Excitation internal parameters* → "Excitation constants"). Note that this parameter is for testing purposes only!

5.2.1.3 Excitation control modes

Automatic voltage regulator

AVR (automatic voltage regulator) is the normal mode of operation. It is also the most important one, so much so that it often gives the name ("the AVR") for the whole excitation controller. The automatic voltage regulator is a closed loop PID (proportional-integral-derivative) controller. As all closed loop controllers, it has a reference value and an actual value. If the actual value deviates from the reference value, the controller adjusts the excitation of the synchronous generator to reach equilibrium.

The diagram below presents the transfer function of the implemented voltage regulator.

© Arcteq Relays Ltd
IM00021

Figure. 5.2.1.3.1 - 211. AVR transfer function.

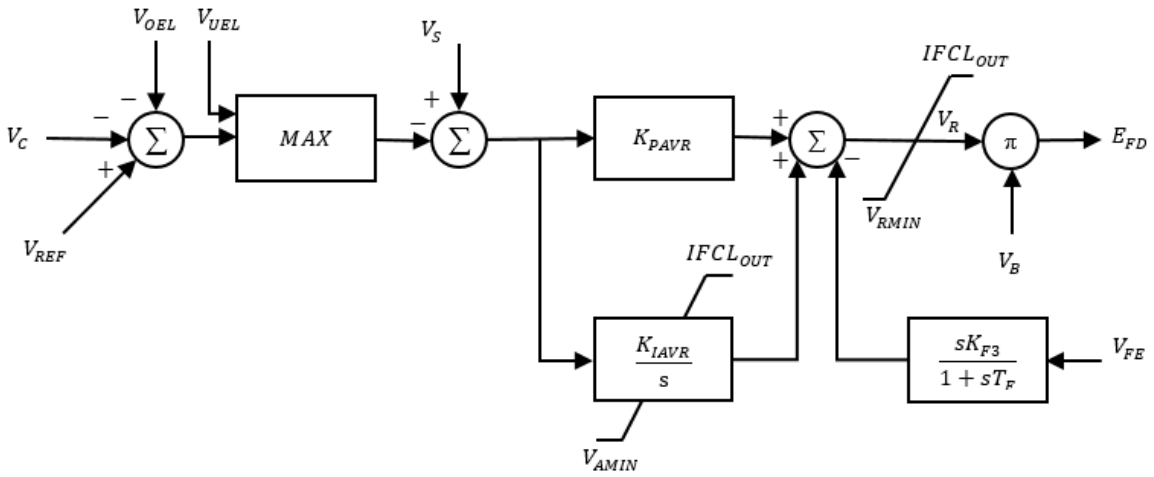

The AVR control mode is activated by the operator, and it is deactivated when the user selects another control mode. The reference value can be adjusted locally and remotely.

When the voltage is kept constant, both the voltage of the external grid and the active power of the generator cause the field current and the reactive power of the machine to vary.

Table. 5.2.1.3.1 - 376. AVR control mode setting parameters.

Name	Range	Step	Default	Description
AVR control status	• AVR mode ON • Increase Ref ON • Decrease Ref OFF • Start Ref ON • Increase Inhibit ON • Decrease Inhibit ON • Reference on high limit • Reference on low limit • Reference on tracking now • Starting finished • Following linevolt now • Bus reference ON • AVR start Ref bypass	-	-	Displays the status of the automatic voltage regulator control mode.
AVR reference now	-500.00…500.00p.u./p.u.	0.01p.u./p.u.	-	Displays the value of the AVR reference at the moment.
Minimum AVR reference allowed	-500.00…500.00p.u./p.u.	0.01p.u./p.u.	-	Displays the minimum value allowed for the AVR reference.
Maximum AVR reference allowed	-500.00…500.00p.u./p.u.	0.01p.u./p.u.	-	Displays the maximum value allowed for the AVR reference.

Name	Range	Step	Default	Description
Proportional gain Kp (field voltage/stator voltage)	0.00…500.00p.u./p.u.	0.01p.u./p.u.	10.00p.u./p.u.	Defines the proportional gain for the AVR.
Integral gain Ki	0.00…10.00 1/s	0.01 1/s	0.20 1/s	Defines the integral gain for the AVR.
Derivative gain Kd (field voltage/field current)	-10.00…0.00p.u.	0.01p.u.	0.00p.u.	Defines the derivative gain for the AVR. This parameter affects the field current in order to compensate for the exciter machine load time. With static excitation, the value is usually 0 p.u. See also the parameter "Derivative filter time constant Td of stabilizing feedback".
Derivative filter time constant Td of stabilizing feedback	0.00…10.00s	0.01s	2.00s	Defines the machine load time constant. It is approximately 0.3 - 1x Tdo'. See also the parameter "Derivative gain Kd".
Reactive current compensation Xc (stator voltage/ reactive current)	-0.2000…0.2000p.u.	0.005p.u.	-0.050p.u.	Defines the reactive current compensation level for the AVR. Usually, the setting value is -0.05 p.u. whereby a 1 p.u. machine current causes a 0.005 p.u. decrease for the AVR setting value. This stabilizes the reactive power output. A larger negative percentage makes the machine more unsensitive for grid voltage changes, while a lower negative percentage increases the sensitivity for grid voltage support. When using a block transformer with the generator, the combined droop (transformer + machine) can be compensated with positive reactive compensation. For example, Xk + Xc = -0.005 p.u. (where transformer Xk = -0.1 p.u. and machine reactive current compensation Xc = 0.05 p.u.).
Active current compensation Rc (stator voltage/active current)	-0.200…0.200p.u.	0.005p.u.	0.00p.u.	Defines the active current compensation level for the AVR. A normal setting is 0 %.
AVR reference on start	0.00…2.00p.u.	0.01p.u.	1.00p.u.	Defines the start-up reference value for the generator.
Min AVR reference synchronized	0.00…2.00p.u.	0.01p.u.	0.90p.u.	Defines the minimum reference value that can be set for the AVR when it is synchronized to a grid.

© Arcteq Relays Ltd
IM00021

Name	Range	Step	Default	Description
Min AVR reference not synchronized	0.00…2.00p.u.	0.01p.u.	0.10p.u.	Defines the minimum reference value that can be set for the AVR when it is not synchronized to a grid.
Max AVR reference synchronized	0.00…2.00p.u.	0.01p.u.	1.10p.u.	Defines the maximum reference value that can be set for the AVR when it is not synchronized to a grid.
Max AVR reference not synchronized	0.00…2.00p.u.	0.01p.u.	1.15p.u.	Defines the maximum reference value that can be set for the AVR when it is synchronized to a grid.
Adjustment slew of reference when synchronized (generator voltage/ second)	0.000…1.000p.u./s	0.001p.u./s	0.002p.u./s	Defines the speed at which the adjustment pulses increase or decrease the AVR reference value, when the AVR is synchronized to a grid.
Adjustment slew of reference when not synchronized (generator voltage/ second)	0.000…1.000p.u./s	0.001p.u./s	0.005p.u./s	Defines the speed at which the adjustment pulses increase or decrease the AVR reference value, when the AVR is not synchronized to a grid.
Enable voltage matching	• Disabled • Enabled	-	Disabled	Enables and disables the voltage matching. When voltage matching is enabled and an input signal for voltage matching is selected, the Generator commander matches the generator voltage with the selected voltage matching reference, as defined by the "Voltage matching reference select" parameter.
Voltage matching reference select	• U3 • U4	-	U3	Defines the reference channel from which the voltage is read for voltage matching. This setting is only visible when "Enable voltage matching" has been enabled.

Name	Range	Step	Default	Description
Voltage matching status	• Excitation is ON • Not synchronized • Synchronized • Grid voltage too low • Low measured voltage • Field breaker is open • Test mode is ON • Voltage matching enabled • Voltage matching commanded • Generator voltage OK for matching • Following line voltage ON	-	-	Displays the status of the voltage matching. This setting is only visible when "Enable voltage matching" has been enabled.
Measured grid voltage now	-500.00…500.00p.u.	0.01p.u.	-	Displays the measured grid voltage at the moment. This setting is only visible when "Enable voltage matching" has been enabled.
Measured generator voltage now	-500.00…500.00p.u.	0.01p.u.	-	Displays the measured generator voltage at the moment. This setting is only visible when "Enable voltage matching" has been enabled.

Field current regulator

The FCR (field current regulator) is also known as manual control. It is used as a backup for the AVR control mode as well as for testing purposes. In the FCR mode the excitation current is kept constant according to the reference value regardless of what the network voltage or active power is. The generator voltage changes according to the active power and to the grid voltage.

The diagram below depicts the transfer function of the field current regulator.

Figure. 5.2.1.3.2 - 212. FCR transfer function.

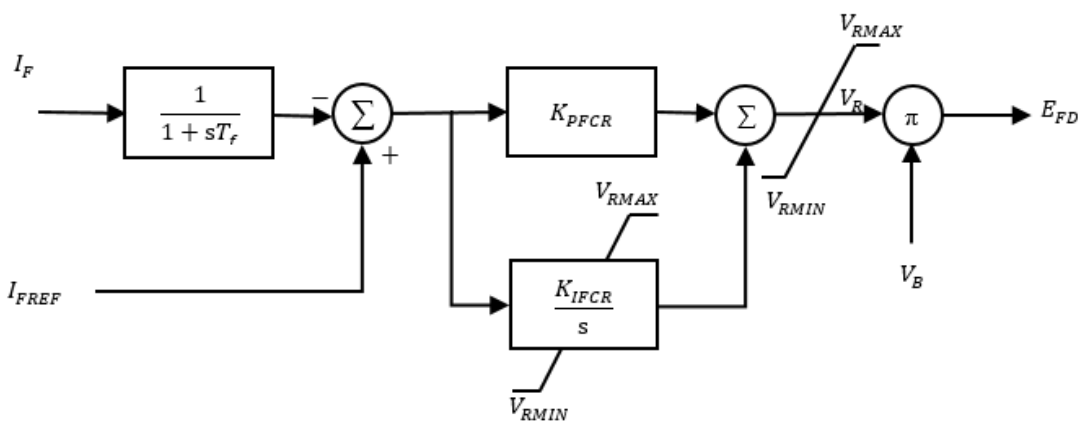

© Arcteq Relays Ltd
IM00021

The FCR control mode is activated by the operator or by the voltage supervision function (*Excitation* → *Supervision* → "Voltage supervision"), and it is deactivated when the user selects another control mode. The reference value can be adjusted locally and remotely.

Table. 5.2.1.3.2 - 377. FCR control mode setting parameters.

Name	Range	Step	Default	Description
FCR control status	• FCR mode ON • Increase reference ON • Decrease reference ON • Start reference ON • Increase inhibit ON • Decrease inhibit ON • Reference on high limit • Reference on low limit • Reference on tracking now • Starting finished • Bus reference ON • Electrical brake ON	-	-	Displays the status of the field current regulator.
FCR reference now	-500.00…500.00p.u./p.u.	0.01p.u./p.u.	-	Displays the FCR reference value at the moment.
Minimum FCR reference allowed	-500.00…500.00p.u./p.u.	0.01p.u./p.u.	-	Displays the minimum allowed value of the FCR reference.
Maximum FCR reference allowed	-500.00…500.00p.u./p.u.	0.01p.u./p.u.	-	Displays the maximum allowed value of the FCR reference.
FCR proportional gain KpFCR (field voltage/field current)	0.00…50.00p.u/p.u	0.01p.u/p.u	5.00p.u/ p.u	Defines the proportional gain for the FCR.
Integral gain KiFCR	0.00…10.00 1/s	0.01 1/s	0.20 1/s	Defines the integral gain for the FCR.
FCR reference on start	0.00…2.00p.u.	0.01p.u.	1.00p.u.	Defines the start-up reference value for the generator.

Name	Range	Step	Default	Description
FCR reference on electrical braking	0.00…2.00p.u.	0.01p.u.	1.00p.u.	Defines the start-up reference value for electrical breaking. Electrical breaking is typically used, when the stopping time of a fast-rotating generator in water power plants must be accelerated. By activating the pin "Activate electrical braking" the FCR mode is set ON and it runs to the set value (the pin can be found at *Excitation → I/O → DI input to excitation*).
Minimum FCR reference synchronized	0.00…2.00p.u.	0.01p.u.	0.00p.u.	Defines the minimum reference value that can be set for the FCR when it is synchronized to a grid.
Minimum FCR reference not synchronized	0.00…2.00p.u.	0.01p.u.	0.10p.u.	Defines the minimum reference value that can be set for the FCR when it is not synchronized to a grid.
Maximum FCR reference not synchronized	0.00…10.00p.u.	0.01p.u.	1.25p.u.	Defines the maximum reference value that can be set for the FCR when it is not synchronized to a grid.
Adjustment slew of reference when synchronized (field current/ second)	0.000…1.00p.u./s	0.001p.u./s	0.005p.u./s	Defines the speed at which the adjustment pulses increase or decrease the FCR reference value, when it is synchronized to a grid.
Adjustment slew of reference when not synchronized (field current/ second)	0.000…1.00p.u./s	0.001p.u./s	0.01p.u./s	This parameter defines the speed at which the adjustment pulses increase or decrease the FCR reference value, when it is not synchronized to a grid.

Reactive power controller

The reactive power control ("MVAR") is a low-speed controller that adjusts reactive power to the requested level. It operates as an overriding controller to the AVR by adjusting its reference value. This design makes use of the fast-acting AVR during network disturbances, but in the long run the reactive power is adjusted to the set reference value. The generator voltage change according to the active power and to the grid voltage.

The diagram below presents the IEEE model of a three-step regulator that is used as a reactive power controller and modified with an output for adaptive set point speed $V_{RefAdjSlew}$ of the AVR control loop.

© Arcteq Relays Ltd
IM00021

Figure. 5.2.1.3.3 - 213. IEEE model of a regulator used as reactive power controller.

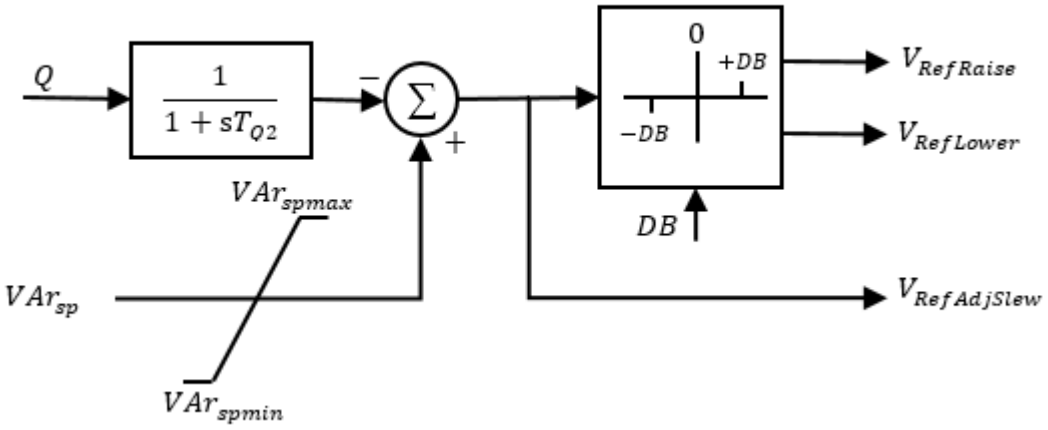

The control mode is activated by the operator, and de-activated by selecting another control mode or when going into island mode. The reference value can be adjusted locally and remotely.

Figure. 5.2.1.3.3 - 214. Generator capability curve.

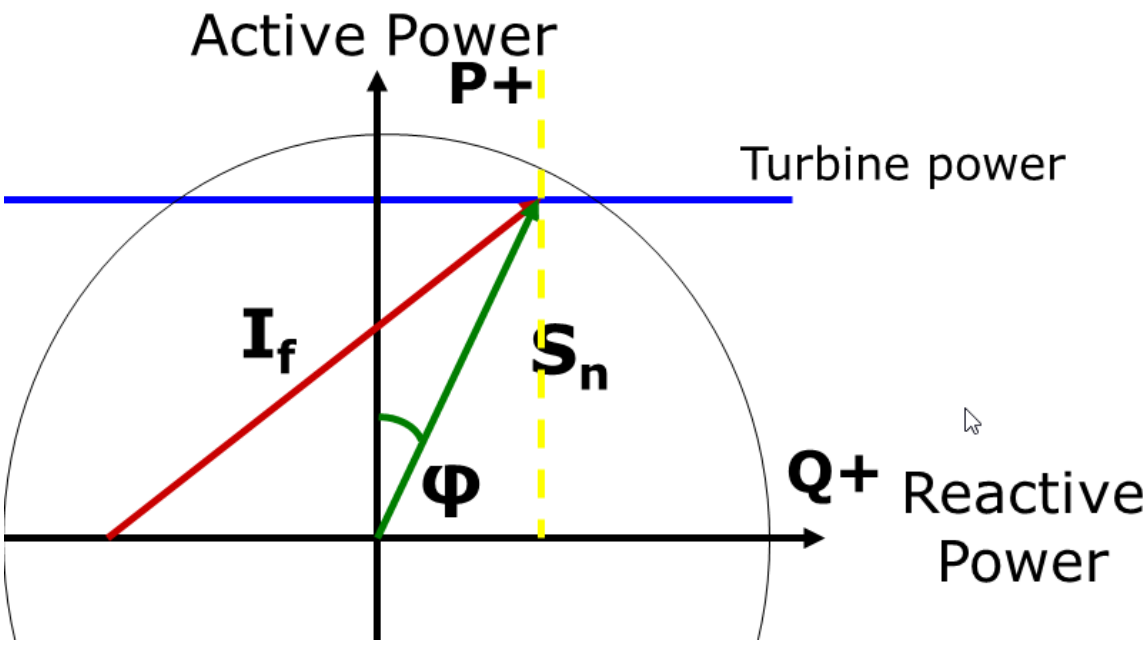

Table. 5.2.1.3.3 - 378. Setting parameters for reactive power control.

Name	Range	Step	Default	Description
MVAR control status	MVAR mode ON Synchronized Q control OK MVAR autoload on start MVAR start ref ON Increase MVAR ON Decrease MVAR ON Unloading Q Increase blocked Decrease blocked SCL overexcitation ON SCL underexcitation ON FCL is on limit VHz limiter active UEL limiter active MVAR ref on high limit MVAR ref on low limit Tracking MVAR reference Increase command to AVR/DCR ON Decrease command to AVR/FCR ON	-	-	Displays the status of the reactive power (MVAR) control mode.
MVAR reference now	-500.00…500.00p.u./p.u.	0.01p.u./p.u.	0.00p.u./p.u.	Defines the MVAR reference at the moment.
Minimum MVAR reference allowed	-500.00…500.00p.u./p.u.	0.01p.u./p.u.	0.00p.u./p.u.	Defines the minimum MVAR reference allowed.
Maximum MVAR reference allowed	-500.00…500.00p.u./p.u.	0.01p.u./p.u.	0.00p.u./p.u.	Defines the minimum MVAR reference allowed.
Reactive power automatic loading at synchronizing	• Disabled • Enabled	-	Disabled	Enables or disables the reactive power regulator, as soon as the Generator commander gets the “synchronized” signal.
Automatic loading level after synchronizing	-1.00...1.00p.u.	0.01p.u.	-0.05p.u.	Defines the reference value for the reactive power regulator, after synchronizing. See also the parameter "Reactive power automatic loading at synchronising".
MVAR controller switches back to AVR once MvarRef reached	• Disabled • Enabled	-	Disabled	Enables and disables the switching to the AVR. If enabled, this parameter switches the reactive power regulator off as soon as the set MVAR reference value is reached.
MVAR controller minimum limit	-1.00...1.00p.u.	0.01p.u.	-0.30p.u.	Defines the minimum reactive power limit for the MVAR controller. The per-unit value is derived from the apparent power of the machine.

© Arcteq Relays Ltd
IM00021

Name	Range	Step	Default	Description
MVAR controller maximum limit	-1.00...1.00p.u.	0.01p.u.	0.60p.u.	Defines the maximum reactive power limit for the MVAR controller. The per-unit value is derived from the apparent power of the machine.
Adjustment slew for reactive power reference (reactive power/ second)	0.00...1.00p.u./s	0.01p.u./s	0.01p.u./s	Defines the speed at which the adjustment pulses increase or decrease the value of the reactive power reference.
Gain of MVAR controller error for AVR adjustment slew	0.000...1.000p.u.	0.001p.u.	0.01p.u.	Defines the speed at which the MVAR controller adjusts the AVR reference value.
Reactive power unload timeout	0.000...1800.000s	0.005s	180.000s	When switching off the generator, the Unload Q signal sets the reactive power to 0. After the timeout has passed, the AVR mode is switched on. This parameter defines the duration of that timeout during which the reactive power reaches 0.
Meas Q delta filter time for MVAR controller	0.200...1800.000s	0.005s	3.000s	Defines the filtering time for the reactive power measurement for the MVAR controller.

Power factor control

The power factor (cos φ) control is a function similar to the reactive power controller. This control mode adjusts the power factor of the generator to a desired level. When active power changes, the reactive power changes accordingly to keep the power factor constant. The generator voltage changes with the active power and with the grid voltage.

The diagram below presents the IEEE model of the power factor controller.

Figure. 5.2.1.3.4 - 215. IEEE model of power factor controller.

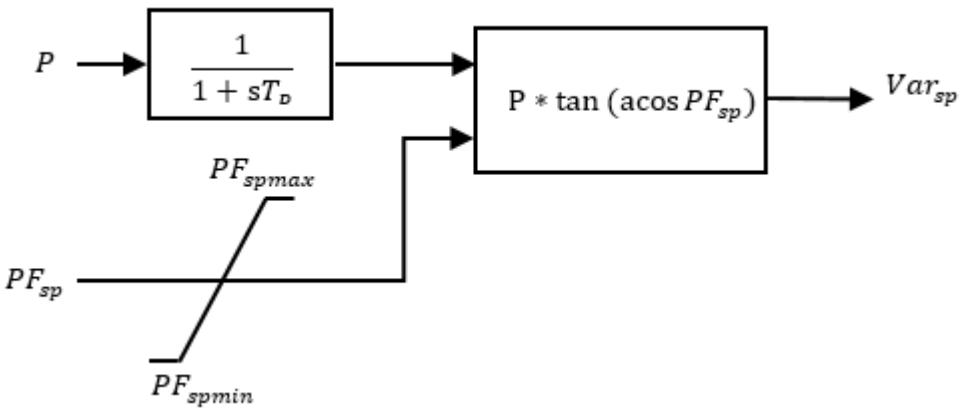

The power factor control mode is activated by the operator, and de-activated by selecting another control mode or when going into island mode. The reference value can be adjusted locally and remotely.

Table. 5.2.1.3.4 - 379. PF control setting parameters.

Name	Range	Step	Default	Description
PF control status	• PF mode ON • Synchronized Q control OK • PF start ref ON • PF ref from bus • Increase PF ON • Decrease PF ON • Unloading Q • Increase blocked • Decrease blocked • SCL overexcitation ON • SCL underexcitation ON • VHz limiter active • UEL limiter is ON • FCL is on limit • PF ref on high limit • PF ref on low limit • Tracking PF reference • Increase command to AVR/FCR ON • Decrease command to AVR/FCR ON	-	-	Displays the status of the power factor control mode.
PF reference now	-500.00…500.00p.u./p.u.	0.01p.u./p.u.	0.00p.u./p.u.	Defines the reference value of the power factor controller at the moment.
Minimum PF reference allowed	-500.00…500.00p.u./p.u.	0.01p.u./p.u.	0.00p.u./p.u.	Defines the minimum allowed value for the power factor reference.
Maximum PF reference allowed	-500.00…500.00p.u./p.u.	0.01p.u./p.u.	0.00p.u./p.u.	Defines the maximum allowed value for the power factor reference.
Minimum limit of the PF controller	-1.000...1.000 arctan φ	0.001 arctan φ	-0.480 arctan φ	Defines the minimum angle for the PF controller.
Maximum limit of the PF controller	-1.000...1.000 arctan φ	0.001 arctan φ	1.000 arctan φ	Defines the maximum angle for the PF controller.
Adjustment slew of power factor reference (power factor/second)	0.000...1.000Q/s	0.001Q/s	0.010Q/s	Defines the speed at which the adjustment pulses increase or decrease the value of the power factor reference.

© Arcteq Relays Ltd
IM00021

5.2.1.4 Excitation limiters

Underexcitation limiter

The underexcitation limiter (UEL) prevents the generator excitation from dipping to such a low level as to risk falling out of synchronization (out of step) with the grid. Since the stability limit expressed in active and reactive power depends on the terminal voltage, the limiter itself is voltage-dependent and its operation is instantaneous. The limiter has six setting points for the underexcitation curve. The limit is typically set with a value that is 5 % higher than the underexcitation protection.

The diagram below depicts the transfer function of the underexcitation limiter (IEEE, type UEL2).

Figure. 5.2.1.4.1 - 216. UEL2 transfer function.

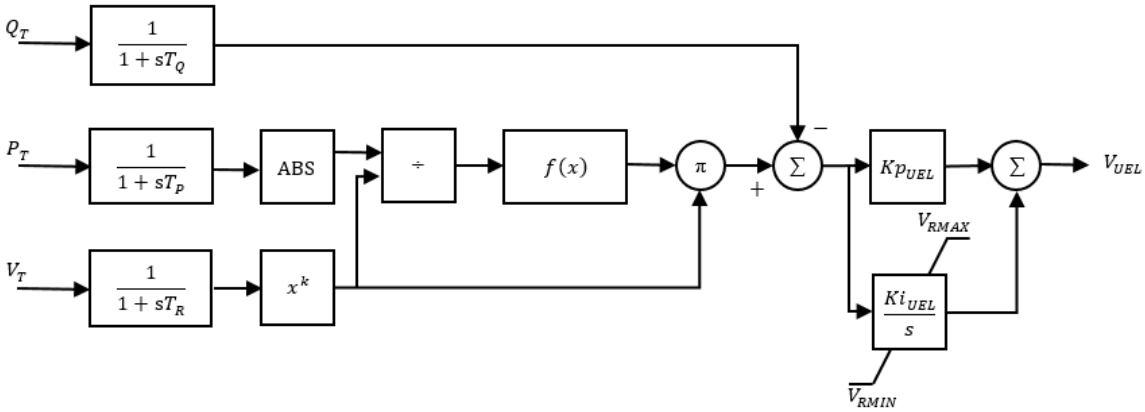

UEL characteristic curve f(x) is compiled by setting coordinates either in an admittance graph (with P/U^2 and Q/U^2 as the axes) or in a current graph (with P/U and Q/U as the axes). The limitation value between the given coordinates is calculated through linear interpolation. When active power P is exceeds 1.0 p.u., the limitation value is calculated through linear extrapolation using the coordinates given for 0.8 p.u. and 1.0 p.u.

Table. 5.2.1.4.1 - 380. UEL setting parameters.

Name	Range	Step	Default	Comments
Underexcitation limiter (UEL) status	• Enabled • Blocked • Limiter active	-	-	Displays the status of the underexcitation limiter.
UEL output now	-500.00…500.00p.u./p.u.	0.01p.u./p.u.	0.00p.u./p.u.	Defines the output of the UEL at the moment.
Underexcitation limiter	• Disabled • Enabled	-	Enabled	Enables and disables the UEL.
Proportional gain KpUEL	0.000…20.000p.u./p.u.	0.001p.u/ p.u.	1.000p.u/ p.u.	Defines the proportional gain for the UEL.

Name	Range	Step	Default	Comments
UEL inverse time delay (0 = instant)	0.000…10.000 1/s	0.001 1/s	0.000 1/s	Defines the inverse time delay for the UEL. Therefore, the bigger the set value, the faster the limiter takes effect.
Underexcitation limiter type	• Admittance diagram • Current diagram	-	Admittance diagram	Defines the limitation principle. When the option "Current diagram" is selected, the limit values are calculated from the measured values without the curve shifts by the machine voltage. When the option "Admittance diagram" is selected, limit values are calculated from the admittance values, with the curve shifts (1/U2) by machine voltage. The higher the voltage, the further the curve shifts from the Q axis, and vice versa. This is the recommended option.
Q-axis coordinate at P=0.00 p.u.	-1.00...1.00	0.01	-0.30	These parameters define the limits of the reactive power and the points at which the underexcitation limiter begins to increase the excitation. (P = active power.)
Q-axis coordinate at P=0.20 p.u.	-1.00...1.00	0.01	-0.25	
Q-axis coordinate at P=0.40 p.u.	-1.00...1.00	0.01	-0.20	
Q-axis coordinate at P=0.60 p.u.	-1.00...1.00	0.01	-0.15	
Q-axis coordinate at P=0.80 p.u.	-1.00...1.00	0.01	-0.10	
Q-axis coordinate at P=1.00 p.u.	-1.00...1.00	0.01	-0.05	

Stator current limiter

The stator current limiter (SCL) limits the stator current of the generator. It operates by decreasing excitation when the stator current reaches the maximum capacity of an overexcited synchronous machine. If the machine is underexcited, the SCL increases excitation. This limiter reduces the current to avoid the stator winding overheating and its inverse time delay allows for a short time overload during grid disturbances. If the active power is high, the stator current cannot be lowered by changing the excitation. In such a case an alarm signal is issued.

The diagram below depicts the transfer function of the stator current limiter.

© Arcteq Relays Ltd
IM00021

Figure. 5.2.1.4.2 - 217. SCL transfer function.

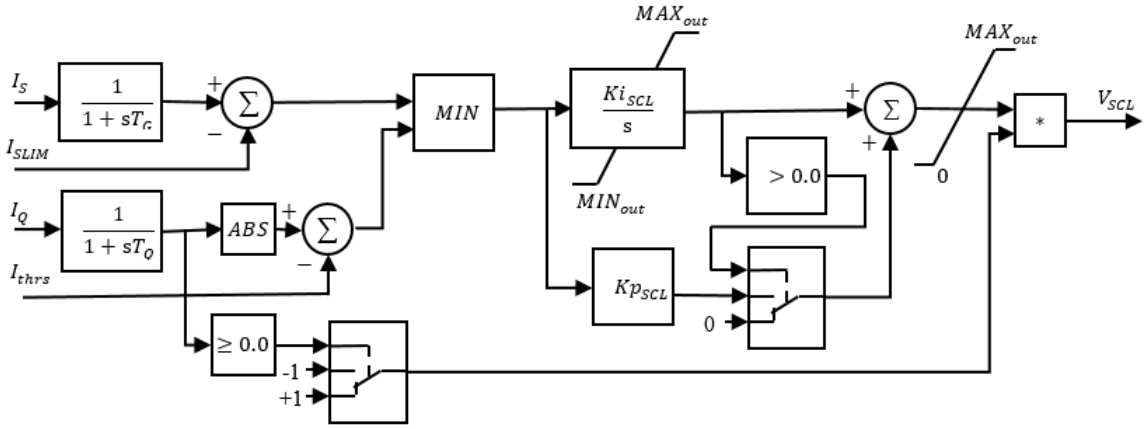

Table. 5.2.1.4.2 - 381. SCL setting parameters.

Name	Range	Step	Default	Comment
Stator current limiter (SCL) status	• Enabled • Blocked • Overexcitation limit active • Underexcitation limit active • Active (IP) overcurrent ON	-	-	Displays the status of the stator current limiter.
SCL output now	-500.00…500.00p.u./p.u.	0.01p.u./p.u.	0.00p.u./p.u.	Defines the output of the SCL at the moment.
Stator current limiter	• Disabled • Enabled	-	Enabled	Enables and disables the stator current limiter.
Limiter calculation mode	• Raw Iq value • ABS (Iq) value	-	ABS (Iq) value	Selects the limiter calculation mode.
Proportional gain KpSCL (field voltage/ stator current)	0.000…10.000p.u./p.u.	0.001p.u./p.u.	1.000p.u./p.u.	Defines the proportional gain for the SCL.
Integral gain KiSCL	0.000…1.000 1/s	0.001 1/s	0.100 1/s	Defines the integral gain for the SCL.
Stator current limit	0.100…2.000p.u.	0.001p.u.	1.100p.u.	Defines the limit point for the stator current at which the SCL is activated.
Time delay to alarm for high active current component	1.000…1800.000s	1.000s	10.000s	Defines the time delay for the limiter activity, after which the limiter issues an alarm.
Reactive current treshold	0.000…1.000p.u.	0.001p.u.	0.100p.u.	Defines the reactive current that the SCL keeps, in spite of the threshold being exceeded.

Name	Range	Step	Default	Comment
Maximum modulation of AVR setpoint	0.000…1.000p.u.	0.001p.u.	0.200p.u.	Defines the maximum modulation that the SCL can have on the AVR reference value.
SCL inverse time delay (0 = instant)	-1.000…0.000p.u.	0.001p.u.	-0.100p.u.	Defines the inverse time delay for the SCL. Therefore, the bigger the set value, the faster the limiter takes effect.

Field current limiter

The fiel current limiter (FCL) has two steps, one instantaneous and one time-delayed.

The instantaneous field current limiter (IFCL) is used when the excitation system is designed with a high ceiling voltage without requiring a high field forcing current. The purpose of the IFCL is to mainly prevent the overheating of the power rectifier that has a small thermal time constant; however, it also keeps the rest of the field circuit protected.

The diagram below depicts the transfer function of the instantaneous field current limiter.

Figure. 5.2.1.4.3 - 218. IFCL transfer function.

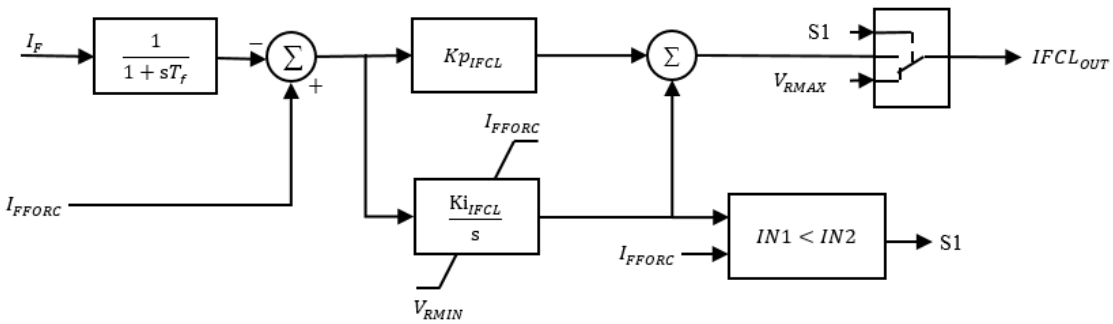

The delayed field current limiter (DFCL) has a lower setting typically corresponding to the rated generator load. It has an inverse time delay to allow for field forcing during grid disturbances. It is used to prevent the various components in the field circuit (such as the generator field coils, power rectifier, excitation transformer, cables) from overheating. In order to contribute to the stabilization of the power grid during voltage disturbances, the limiter is time-delayed to allow it to overload for a short time.

The diagram below depicts the transfer function of the delayed field current limiter.

© Arcteq Relays Ltd
IM00021

Figure. 5.2.1.4.3 - 219. DFCL transfer function.

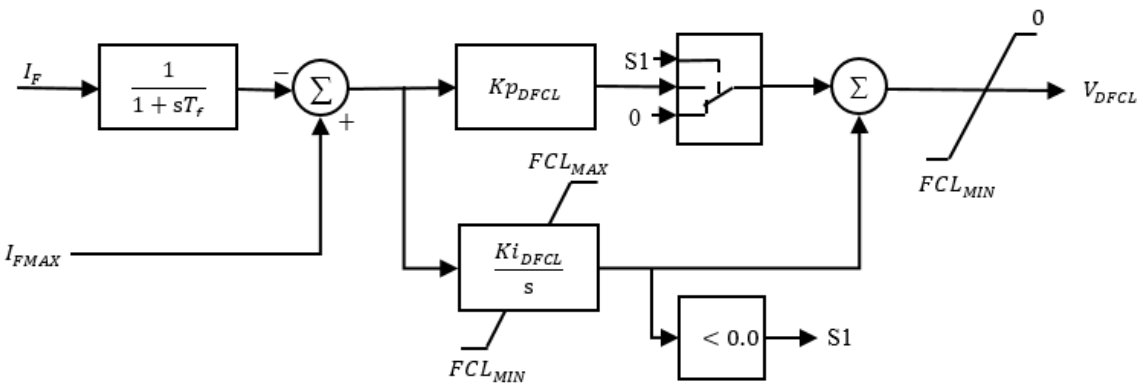

Table. 5.2.1.4.3 - 382. IFCL setting parameters.

Name	Range	Step	Default	Description
Instantaneous field current limiter (IFCL) status	• Enabled • Blocked • Limiter active	-	-	Displays the status of the instantaneous field current limiter.
IFCL output now ($V_{r,max}$)	-500.00…500.00p.u./p.u.	0.01p.u./p.u.	0.00p.u./p.u.	Defines the output of the IFCL.
Instantaneous field current limiter	• Disabled • Enabled	-	Enabled	Enables and disables the IFCL.
Proportional gain Kp_{IFCL}	0.000...25.000p.u./p.u.	0.010p.u/ p.u	5.000p.u/ p.u	Defines the proportional gain for the IFCL.
Integral gain Ki_{IFCL}	0.000...50.000 1/s	0.010 1/s	5.000 1/s	Defines the integral gain for the IFCL.

Table. 5.2.1.4.3 - 383. DFCL setting parameters.

Name	Range	Step	Default	Description
Delayed field current limiter (DFCL) status	• Enabled • Blocked • Limiter active	-	-	Displays the status of the delayed field current limiter.
DFCL output	-500.00…500.00p.u./p.u.	0.01p.u./p.u.	0.00p.u./p.u.	Defines the output of the DFCL.
Delayed field current limiter	• Disabled • Enabled	-	Enabled	Enables and disables the DFCL.
Proportional gain Kp_{DFCL}	0.00...1.00p.u./p.u.	0.01p.u./p.u.	0.1p.u./p.u.	Defines the proportional gain for the DFCL.
Integral gain Ki_{DFCL}	0.000...10.000 1/s	0.001 1/s	0.200 1/s	Defines the integral gain for the DFCL.
Upper limit for integrator	0.00...1.00	0.01	0.50	Defines the upper limit for the integrator.

Name	Range	Step	Default	Description
DFCL inverse time delay (0 = Instant)	-1.00...0.00	0.01	-0.20	Defines the upper limit for the integrator.

V/Hz limiter

The volts-per-hertz limiter (VHZL) is used to avoid high saturation in magnetic cores when the synchronous generator's speed is low due to a loss of torque from the turbine. Mainly this can happen with the island mode of operation. The limiter operates by limiting the maximum value ($V_{adj,max}$) of the AVR reference value (V_{ref}).

The diagram below depicts the transfer function of the volts-per-hertz limiter.

Figure. 5.2.1.4.4 - 220. V/Hz limiter transfer function.

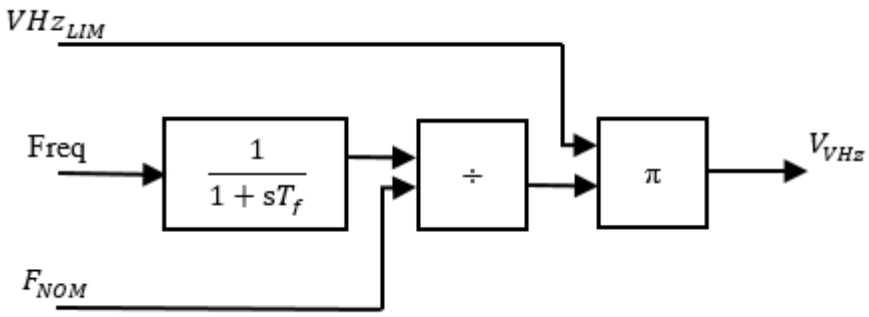

The knee point in Hz is calculated as V_T * F_{NOM} / VHz_{LIM} with V_T being the actual stator voltage in p.u.

Table. 5.2.1.4.4 - 384. V/Hz limiter setting parameters.

Name	Range	Step	Default	Comments
V/Hz limiter (VHZ) status	• Enabled • Limiter active	-	-	Displays the status of the volts-per-hertz limiter.
V/Hz output now	-500.00…500.00p.u./p.u.	0.01p.u./p.u.	0.00p.u./p.u.	Defines the output of the volts-per-hertz limitor at the moment.
V/Hz limiter	• Disabled • Enabled	-	Enabled	Enables and disables the volts-per-hertz limiter.
V/Hz limit (generator voltage/generator frequency)	0.00...10.00 1/s	0.01 1/s	1.10 1/s	This parameter defines the limit at which the limiter is activated.

© Arcteq Relays Ltd
IM00021

5.2.1.5 Power system stabilizer

The power system stabilizer (PSS) is a function required by grid companies for certain geographical areas and machines of certain sizes. The purpose of the PSS is to dynamically adjust excitation so that the machine damps any network power fluctuations. Additionally, the PSS reduces torque fluctuations between the generator and the prime mover. The transfer function of the stabilizer follows the IEEE recommendation (PSS2A, PSS2B, PSS2C).

Table. 5.2.1.5 - 385. PSS setting parameters.

Name	Range	Step	Default
Power system stabilizer (PSS2C)	• Disabled • Enabled	-	Disabled
Delta calculation	• Enabled • Disabled	-	Enabled
Speed input	• None • ASC1 • ASC2 • ASC3 • ASC4	-	None
PSS block release time (after ext. block released)	6.000…180.000s	0.005s	6.000s
PSS output signal to AVR control	-5000.000…5000.000p.u.	0.001p.u.	0.000p.u.
KS1 PSS gain	0.00...25.00	0.01	0.00
KS2 compensation factor	0.00...10.00Ws/VA	0.01Ws/VA	1.00Ws/VA
KS3 signal matching factor	0.00...10.00	0.01	1.00
TW1 high-pass filter time 1	0.000...25.000s	0.005s	6.000s
TW2 high-pass filter time 2	0.000...25.000s	0.005s	6.000s
TW3 high-pass filter time 3	0.000...25.000s	0.005s	6.000s
TW4 high-pass filter time 4.(0=bypass)	0.000...25.000s	0.005s	0.000s
T1 nominator time constant of first lead/lag filter	0.000...10.000s	0.005s	1.000s
T2 denominator time constant of first lead/lag filter	0.000...10.000s	0.005s	1.000s
T3 nominator time constant of second lead/lag filter	0.000...10.000s	0.005s	1.000s
T4 denominator time constant of second lead/lag filter	0.000...10.000s	0.005s	1.000s
T7 power change integration time constant	0.000...25.000Ws/VA	0.005Ws/VA	6.000Ws/VA
T8 ramp track filter nominator time constant	0.000...25.000s	0.005s	0.400s
T9 ramp track filter denominator time constant	0.000...25.000s	0.005s	0.100s
T10 nominator time constant of third lead/lag filter	0.000...10.000s	0.005s	1.000s
T11 denominator time constant of third lead/lag filter	0.000...10.000s	0.005s	1.000s

Name	Range	Step	Default
T12 nominator time constant of fourth lead/lag filter	0.000...10.000s	0.005s	1.000s
T13 denominator time constant of fourth lead/lag filter	0.000...10.000s	0.005s	1.000s
M ramp track filter denominator exponent	1...5	1	4
N ramp track filter exponent	1...5	1	1
$V_{ST,max}$ upper limit for PSS output signal	0.00...0.20p.u.	0.01p.u.	0.05p.u.
$V_{ST,min}$ lower limit for PSS output signal	-0.20...0.00p.u.	0.01p.u.	-0.05p.u.
Reactance, Xd'	0.00...2.00p.u.	0.01p.u.	0.30p.u.
Delta calculation derivate time	0.000…25.000s	0.005s	4.000s
Delta calculation filter time	0.000…25.000s	0.005s	4.000s

Table. 5.2.1.5 - 386. PSS I/O.

Name	Description
PSS external enable	Defines an external source that enables the PSS. (1=enabled.)
PSS external block	Defines an external source that blocks the PSS. (1=blocked.)

5.2.2 Excitation I/O

The inputs and outputs of the Generator commander are categorized as follows:

- Direct output control
- DI inputs to excitation
- PP inputs to excitation
- Bridge A I/O
- Active control status

The following subchapters, titled accordingly, go through all individual inputs and outputs in each of the categories.

5.2.2.1 Direct output control

Table. 5.2.2.1 - 387. Generator commander output signals.

Output signal name	Description
GMAG Field current limiter active	The delayed field current limiter is running.
GMAG Under excitation limiter active	The underexcitation limiter is running.
GMAG Stator current limiter overexcited active	The stator current limiter is running (overexcited).

© Arcteq Relays Ltd
IM00021

Output signal name	Description
GMAG Stator current limiter underexcited active	The stator current limiter is running (underexcited).
GMAG High active current	The high active current exceeds the stator current limiter threshold.
GMAG Instantaneous field current limiter	The instantaneous field current limiter is running.
GMAG Low supply voltage	Low supply voltage.
GMAG FCR mode	The FCR mode is selected.
GMAG AVR mode	The AVR mode is selected.
GMAG MVAR mode	The MVAR mode is selected.
GMAG PF mode	The PF mode is selected.
GMAG Low measured voltage	Low measured voltage.
GMAG IGBT shorted	The IGBT output has shorted out.
GMAG PWM enable	The bridge is in the Run mode.
GMAG PWM AC1 ON	When using at least two bridges, Bridge 1's AC supply MCB is not tripped and the supply voltage is OK. Therefore, the AC supply is selected.
GMAG PWM DC1 ON	When using at least two bridges, the AC supply MCBs of both Bridge 1 and Bridge 2 are tripped and the supply voltage is not OK. Therefore, the DC supply is selected.
GMAG PWM AC2 ON	When using at least two bridges, Bridge 2's AC supply MCB is not tripped and the supply voltage is OK. Therefore, the AC supply is selected.
GMAG PWM DC2 ON	When using at two bridges, the AC supply MCBs of both Bridge 1 and Bridge 2 are tripped and the supply voltage is not OK. Therefore, the DC supply is selected.
GMAG Rectifier trip	The rectifier is tripped through an excitation common trip.
GMAG Bridge 1 temperature high	Trip caused by a high temperature from Bridge 1.
GMAG Bridge 2 temperature high	Trip caused by a high temperature from Bridge 2.
GMAG Excitation ON	Excitation is running.
GMAG Excitation OFF	Excitation is not running.
GMAG Overcurrent	Trip caused by an excitation overcurrent.
GMAG Bridge 1 DI1 signal	Digital input statuses from AQ-GC30 rectifier units. The possible values are: • Single or reduntant Channel 1 • Reduntant Channel 2
GMAG Bridge 1 DI2 signal	

Output signal name	Description
GMAG Bridge 1 DI3 signal	
GMAG Bridge 1 DI4 signal	
GMAG Bridge 1 DI5 signal	
GMAG Bridge 1 DI6 signal	
GMAG Bridge 1 DI7 signal	
GMAG Bridge 1 DI8 signal	
GMAG Bridge 2 DI1 signal	
GMAG Bridge 2 DI2 signal	
GMAG Bridge 2 DI3 signal	
GMAG Bridge 2 DI4 signal	
GMAG Bridge 2 DI5 signal	
GMAG Bridge 2 DI6 signal	
GMAG Bridge 2 DI7 signal	
GMAG Bridge 2 DI8 signal	
GMAG Synchronised	Excitation is in the Synchronised mode.
GMAG Island mode	Excitation is in the Island mode.
GMAG Field breaker is open	The field breaker is open.
GMAG Field breaker is closed	The field breaker is closed.
GMAG Field flashing	Field flashing is running.
GMAG Long field flashing	Field flashing is taking too long.
GMAG Test mode ON	The excitation test mode is running.
GMAG Phase retard	The control signal to the rectifier unit has run down to the minimum during stopping.

© Arcteq Relays Ltd
IM00021

Output signal name	Description
GMAG Reset ON	The excitation reset is on.
GMAG Command AVR	The AVR command is on.
GMAG Command FCR	The FCR command is on.
GMAG Command MVAR	The MVAR command is on.
GMAG Command PF	The PF command is on.
GMAG Excitation run order	The excitation run order is on.
GMAG Increase	The excitation reference value increase is on.
GMAG Decrease	The excitation reference value decrease is on.
GMAG AVR bus	The AVR command is on, controlled through the remote bus.
GMAG FCR bus	The FCR command is on, controlled through the remote bus.
GMAG MVAR bus	The MVAR command is on, controlled through the remote bus.
GMAG PF bus	The PF command is on, controlled through the remote bus.
GMAG Overriding control	The MVAR or PF control mode is on and can change the reference value.
GMAG Increase MVAR PF	The MVAR or PF control mode is on and increases the reference value.
GMAG Decrease MVAR PF	The MVAR or PF control mode is on and decreases the reference value.
GMAG Low Q error	The difference between the MVAR or PF mode setpoint and the actual value is below the hysteresis level.
GMAG AVR reference on low limit	The AVR reference value is on the low limit.
GMAG AVR reference on high limit	The AVR reference value is on the high limit.
GMAG FCR reference on low limit	The FCR reference value is on the low limit.
GMAG FCR reference on high limit	The FCR reference value is on the high limit.
GMAG VHZ limit active	The V/Hz limiter is running.
GMAG ProcessPanel activated	The Generator commander's control mode is "GMAG ProcessPanel activated" which means that the Commander is controlled locally via the device's front panel.
GMAG Parameters activated	The Commander control mode is "GMAG Parameters (DI) activated" which means that the Commander is controlled locally via the device's digital inputs.
GMAG Bus activated	The remote bus is active.
GMAG Reset and excitation OFF	The excitation reset is on when the excitation is off (e.g. a rectifier trip).

Output signal name	Description
GMAG Field breaker does not open	The field breaker cannot be opened within the supervision time.
GMAG New reference start	New reference start is written to the reference value at the start of the excitation.
GMAG GB is closed	The generator breaker is closed.
GMAG Field breaker is open, Gen breaker is closed	Trip when the field breaker is open and the generator breaker is closed.
GMAG Disturbed mode	Frequency change rate (derivate) is too high within the supervision time.
GMAG Disturbed mode pulse	Frequency change rate (derivate) is too high, sending a control pulse to MVAR/PF mode to AVR mode.
GMAG Following line volt	Voltage adjustment to another grid is running.
GMAG Test square enabled	Step test square is enabled.
GMAG Order open FB	The field breaker open command.
GMAG Order close FB	The field breaker close command.
GMAG Reactive power unloaded	The reactive power unloading function is on.
GMAG MVAR reference on high limit	The MVAR reference is on the high limit.
GMAG MVAR reference on low limit	The MVAR reference is on the low limit.
GMAG PF reference on high limit	The PF reference is on the high limit.
GMAG PF reference on low limit	The PF reference is on the low limit.
GMAG AVR start reference	Writes the "AVR reference on start" as the AVR reference value.
GMAG FCR start reference	Writes the "FCR reference on start” as the FCR reference value.
PSS is active	The power system stabilizer is active.
PSS is blocked	The power system stabilizer is blocked.

© Arcteq Relays Ltd
IM00021

5.2.2.2 DI inputs to excitation

Table. 5.2.2.2 - 388. DI inputs of the excitation unit.

Input name	Description
Increase	Defines the input that increases the reference values of the selected regulator function.
Decrease	Defines the input that decreases the reference values of the selected regulator function.
TestMode Increase	Defines the input that increases the reference values, if either "ForcedVal" or "OpnLoopRef" is selected for the "Force PWM control signal" parameter in the "Excitation internal parameters" tab. This input is read only when the "Control mode" parameter under the "Local control" tab is set to "DI control".
TestMode Decrease	Defines the input that decreases the reference values, if either "ForcedVal" or "OpnLoopRef" is selected for the "Force PWM control signal" parameter in the "Excitation internal parameters" tab. This input is read only when the "Control mode" parameter under the "Local control" tab is set to "DI control".
Command AVR	This input is used to enable the AVR control mode. This input is read only when the "Control mode" parameter under the "Local control" tab is set to "DI control".
Command FCR	This input is used to enable the FCR control mode. This input is read only when the "Control mode" parameter under the "Local control" tab is set to "DI control".
Command MVAr	This input is used to enable MVAr control mode. This input is read only when the "Control mode" parameter under the "Local control" tab is set to "DI control".
Command PF	This input is used to enable PF control mode. This input is read only when the "Control mode" parameter under the "Local control" tab is set to "DI control".
Command remote bus	This input is used to activate the remote bus controls. See also the parameter "Require permission to remote control" under the "Remote control" tab.
Force IO/ params control only	This input is used to override the process panel or the bus controls by DI controls, if necessary.
Unload Q	See also the parameter "Reactive power unload timeout" under the "MVAR" tab. This input is read only when the "Control mode" parameter under the "Local control" tab is set to "DI control".
Reset	This input is used to reset trips from the excitation application.
Field breaker status 'Closed in'	This input is used to indicate to the excitation that the field breaker is closed in.
Excitation OFF command	This input is used to switch the excitation off.
Excitation ON command	This input is used to switch the excitation on.

Input name	Description
Open FB command	This input is used to open the field breaker. This input is read only when the "Control mode" parameter under the "Local control" tab is set to "DI control".
Close FB command	This input is used to close the field breaker. This input is read only when the "Control mode" parameter under the "Local control" tab is set to "DI control".
Incoming trip signal	This input is used for tripping the field breaker after the time set in the "Inverter mode time on stopping" parameter (found under the "Voltage supervision" tab) has passed. This allows the control signal to be set down ("Phase retard") before opening the field breaker.
Field overcurrent	This input is used to open the field breaker with the set "Open field breaker trip time" parameter (found under the "Voltage supervision" tab). This input is read only when the "Control mode" parameter under the "Local control" tab is set to "DI control".
Speed > 90 % input	This input is used to indicate that the generator's rotation speed is at least 90 % of the nominal speed.
Generator breaker status 'Closed in'	This input is used to indicate to the excitation that the generator breaker is closed.
Line breaker status 'Closed in'	This input is used to indicate to the excitation that the line breaker to the network is closed.
VT Supervision fail status	This input is used to indicate that there is a fault in the voltage measurement circuits. If an error input is received, the control mode is switched to FCR.
Activate electrical braking	This input is used to activate electrical braking. See also the parameter "FCR reference on electrical braking" under the "FCR" tab.
External islanding detection	This input is used to bring in external on-island detection information to the excitation. If either the MVAr or the PF control mode is active, this signal controls the AVR mode ON.
Common trip	This input is used to bring in external tripping information. If the "Internal tripping of field breaker" parameter (under the "Voltage supervision" tab) has been enabled, the field breaker is controlled open.
Voltage matching input	This input is used to bring in external voltage matching information. See also the parameter "Enable voltage matching" under the "AVR" tab.
Backup supply ON	This input is used to switch over to use the backup supply, for example during a fault in the main supply.
Block underexcitation limiter	This input is used to block the underexcitation limiter (UEL), for example during the motor start sequence.
Block field current limiter (time-delayed)	This input is used to block the time delayed field current limiter (DFCL).
Block field current limiter (instant)	This input is used to block the instant field current limiter (IFCL).

© Arcteq Relays Ltd
IM00021

Input name	Description
Block stator current limiter	This input is used to block the stator current limiter (SCL).
Motor mode starting (bypass FCR starting ramp)	This input is used to quickly increase the FCR reference value during the motor start sequence.
Block process panel and remote control	This input is used to block the process panel and remote control, for example during a motor start.

5.2.2.3 PP inputs to excitation

Table. 5.2.2.3 - 389. PP inputs of the excitation unit.

Input name	Description
Testmode ON	This input is used to switch on the test mode. This input is read only when the "Control mode" parameter under the "Local control" tab is set to "PP control".
Command AVR	This input is used to switch on the AVR control mode. This input is read only when the "Control mode" parameter under the "Local control" tab is set to "PP control".
Command FCR	This input is used to switch on the FCR control mode. This input is read only when the "Control mode" parameter under the "Local control" tab is set to "PP control".
Command MVar	This input is used to switch on the MVar control mode. This input is read only when the "Control mode" parameter under the "Local control" tab is set to "PP control".
Command PF	This input is used to switch on the PF control mode. This input is read only when the "Control mode" parameter under the "Local control" tab is set to "PP control".
Increase	Defines the input that increases the reference values of the selected regulator function. This input is read only when the "Control mode" parameter under the "Local control" tab is set to "PP control".
Decrease	Defines the input that decreases the reference values of the selected regulator function. This input is read only when the "Control mode" parameter under the "Local control" tab is set to "PP control".
Field breaker OFF	This input is used to open the field breaker. This input is read only when the "Control mode" parameter under the "Local control" tab is set to "PP control".
Field breaker ON	This input is used to close the field breaker. This input is read only when the "Control mode" parameter under the "Local control" tab is set to "PP control".

Input name	Description
Unload Mvar	This input is used to set reactive power to zero. See also the parameter "Reactive power unload timeout" under the "MVAR" tab. This input is read only when the "Control mode" parameter under the "Local control" tab is set to "PP control".

5.2.2.4 Local and remote bridge I/O

NOTICE!
Please note that in all the tables below "A" refers to a local bridge and "B" to a remote bridge. This also applies to the parameter names and menu/submenu/tab names in the AQtivate configuration and setting tool.

Table. 5.2.2.4 - 390. Local/remote bridge communication ("Bridge A/B communication").

Name	Range	Step	Default	Description
A/B receiver GOOSE quality	$0…2^{32}–1$	1	0	Displays the quality of the communication with the AQ-GC30 rectifier unit. "0" is an indication of a healthy connection.
A/B receiver application ID	0×0…0×3FFF	0×1	0×A1	Displays the virtual GOOSE address for communication with the AQ-GC30 rectifier unit. Please note that the A/B receivers must have different addresses, e.g. ChA 0xA1 and ChB 0xA3.
A/B receiver configuration revision	$0…2^{32}–1$	1	177	Displays the revision number of the configuration. Please note that the A/B receivers must have different configuration revisions, eg. ChA 177 and ChB 179.

Table. 5.2.2.4 - 391. The DI status of the local/remote bridge ("Bridge A/B DI status").

Name	Range	Step	Default	Description
Bridge A/B HW system OK	• System OK • Failing	-	System OK	Indicates that the hardware system of the local/remote bridge is OK.
Bridge A/B communication OK	• System OK • Failing	-	System OK	Indicates that the Generator commander has established a communication connection to the local/remote bridge.
Bridge A/B health status	• System OK • Failing	-	System OK	Indicates that the health status of the local/remote bridge is OK.
Bridge A DI1	• Off • On	-	Off	Indicates the digital input status of the local/remote bridge.
Bridge A DI2				
Bridge A DI3				
Bridge A DI4				

© Arcteq Relays Ltd
IM00021

Name	Range	Step	Default	Description
Bridge A DI5				
Bridge A DI6				
Bridge A DI7				
Bridge A DI8				
Bridge B DI1				
Bridge B DI2				
Bridge B DI3				
Bridge B DI4				
Bridge B DI5				
Bridge B DI6				
Bridge B DI7				
Bridge B DI8				

Table. 5.2.2.4 - 392. The AI status of the local/remote bridge ("Bridge A/B AI status").

Name	Range	Step	Default	Description
Bridge A/B mA input value	0.000…20.000mA	0.001mA	0mA	Displays the milliampere input value of the local/ remote bridge, when (for example) controlling the AQ-GC30 rectifier unit through logic.
Bridge A/B U input value	0.000…10.000V	0.001V	0V	Displays the voltage input value of the local/ bridge bridge, when (for example) controlling the AQ-GC30 rectifier unit through logic.
Bridge A/B IGBT temperature	0.00…500.00ºC	0.01ºC	0ºC	Displays the temperature measurement value of the local/remote bridge.
Bridge A/B DC link voltage (raw)	0.00…500.00VDC	0.01VDC	0VDC	Displays the DC link voltage measurement value of the local/remote bridge. Please note that this parameter is named "DC link voltage" in the settings for the remote (B) bridge.
Bridge A DC link voltage filter	• Enabled • Disabled	-	Enabled	Enables or disables the DC link voltage measuring filter of the local (A) bridge. See also the parameter "Bridge A/B DC link voltage filter time constant". Please note that this setting is only available for the local (A) bridge.
Bridge A DC link voltage filter time constant	0.000…1800.000s	0.005s	0.02s	Defines the time constant for the DC link voltage measuring filter of local (A) bridge. See also the parameter "Bridge A/B DC link voltage filter". Please note that this setting is only available for the local (A) bridge.

Name	Range	Step	Default	Description
Bridge A DC link voltage (filtered)	0.000…500.000V	0.001V	0V	Displays the DC link voltage filtered measurement value of the local (A) bridge. This current is the supply voltage as V (DC). Please note that this setting is only available for the local (A) bridge.
Bridge A/B DC link current (raw)	0.000…500.000A	0.001A	0A	Displays the DC link current measurement value of the local/remote bridge. This current is the excitation current.
Bridge A/B DC link current filter	• Enabled • Disabled	-	Enabled	Enables and disables the DC link current measuring filter of the local/remote bridge. See also the parameter "Bridge A/B DC link current filter time constant".
Bridge A/B DC link filter time constant	0.000…1800.000s	0.005s	0.02s	Defines the time constant for the DC link current measuring filter of the local/remote bridge. See also the parameter "Bridge A/B DC link current filter".
Bridge A/B DC link current (filtered)	0.000…500.000A	0.001A	0A	Displays the DC link current filtered measurement value of the local/remote bridge. This current is the excitation current.
Bridge A/B supply voltage	0.0…500.0V	0.1V	0V	Defines the supply voltage of the local/remote bridge.

5.2.2.5 Active control status

NOTICE!
Please note that in all the tables below "A" refers to a local bridge and "B" to a remote bridge. This also applies to the parameter names and menu/submenu/tab names in the AQtivate configuration and setting tool.

Table. 5.2.2.5 - 393. Bridge devices monitor.

Name	Range	Step	Default	Description
Number of rectifiers	• Single • Redundant (1+1) • Redundant (n–1)	-	Single	Selects the excitation system configuration.
Bridge 2 start-up health check time	0…1800s	1s	30s	Defines the running time at the start before changing to another channel. This setting is only visible when the "Number of rectifiers" parameters is **not** set to "Single".
Bridge A health status	• System OK • Failing	-	System OK	Indicates that the health status of the local (A) bridge is OK.

© Arcteq Relays Ltd
IM00021

Name	Range	Step	Default	Description
Bridge B health status	• System OK • Failing	-	System OK	Indicates that the health status of the remote (B) bridge is OK.
Active bridge now	• A • B	-	A	Indicates which rectifier bridge is currently active. This setting is only visible when the "Number of rectifiers" parameters is **not** set to "Single".
Bridge A DO3	• Off • On	-	Off	Forces the digital output 3 (DO3) of the local (A) bridge to be ON or OFF.
Bridge A DO4	• Off • On	-	Off	Forces the digital output 4 (DO4) of the local (A) bridge to be ON or OFF.

Table. 5.2.2.5 - 394. Local control status ("Control devices monitor").

Name	Range	Step	Default	Description
Commanders in use	• Only this • Redundant	-	Only this	Selects the running status of the excitation configuration for (for example) maintenance purposes.
This commander is by default	• On-line • Standby	-	On-line	Selects between the online and the standby channel. This setting is only visible when the "Commanders in use" parameter is set to "Redundant".
This commander controlling mode now	• On-line • Standby	-	-	Indicates the status of the controlling mode. This setting is only visible when the "Commanders in use" parameter is set to "Redundant".
Remote commander status	• Failing • OK	-	-	Indicates the commander status. This setting is only visible when the "Commanders in use" parameter is set to "Redundant".
Local integrator status	–3000.000…3000.000	0.001	-	Displays the active mode integrator part of the selected channel. This setting is only visible when the "Commanders in use" parameter is set to "Redundant".
Select remote integrator status input	GOOSE input 1...20	-	GOOSE input 1	Selects the GOOSE input which is used to receive the active mode integrator part from another channel. This setting is only visible when the "Commanders in use" parameter is set to "Redundant".
Remote integrator status	–3000.000…3000.000	0.001	-	Displays the received value of the active integrator part of another channel. This setting is only visible when the "Commanders in use" parameter is set to "Redundant".

Name	Range	Step	Default	Description
Local excitation current measurement	–3000.000…3000.000	0.001	-	Displays the excitation current measurement of the selected channel. This setting is only visible when the "Commanders in use" parameter is set to "Redundant".
Select remote excitation current measurement input	GOOSE input 1...20	-	GOOSE input 1	Selects the GOOSE input for the excitation current measurement from another channel. This setting is only visible when the "Commanders in use" parameter is set to "Redundant".
Remote excitation current measurement	–3000.000…3000.000	0.001	-	Displays the excitation current measurement from another channel. This setting is only visible when the "Commanders in use" parameter is set to "Redundant".

Table. 5.2.2.5 - 395. Redundancy configuration.

Redundant bridges configuration	
Name	Description
Select channel (0=A 1=B)	Selects the digital input from the auxiliary relay which is connected via an active ChA. ChB selects both ChA (NC) and ChB (NO).
Redundant control configuration	
Name	**Description**
Disable commands to bridge	Selects the signal which disables all commands to the redundant bridge.
Local channel status	Displays the status of the local channel; by default "Always true".
Remote channel status	Displays the status of the remote channel; by default "Always true".

Table. 5.2.2.5 - 396. Active bridge input status (DI and AI).

Name	Range	Step	Default	Description
Active bridge DIx	• Off • On	-	Off	Indicates whether a specific digital input (1…8) is ON or OFF.
Active bridge mA input value	0.000…20.000mA	0.001mA	-	Displays the current measurement value of the active bridge.
Active bridge U input value	0.000…10.000V	0.001V	-	Displays the U input measurement value of the active bridge.
PWM IGBT temperature	0.00…500.00ºC	0.01ºC	-	Displays the temperature measurement value of the active bridge.

© Arcteq Relays Ltd
IM00021

Name	Range	Step	Default	Description
PWM DC link voltage	0.00…500.00VDC	0.01VDC	-	Displays the DC link voltage measurement value of the active bridge.
PWM DC link current	0.000…500.000A	0.001A	-	Displays the DC link current measurement value of the active bridge. This current is the excitation current.

Table. 5.2.2.5 - 397. Active bridge DO status and control.

Name	Range	Step	Default	Description
Active bridge DOx	• Off • On	-	Off	Indicates whether a specific digital output (1…4) is ON or OFF. When DO1 is ON, the bridge health status is OK. See also the parameter "Bridge A/B HW system OK" under the "Bridge I/O" tab. When DO2 is ON, the Generator commander has established a communication connection to the selected bridge. See also the parameter "Bridge A/B communication OK" under the "Bridge I/O" tab.
Bridge A DO3	(a long list of various inputs and outputs)	-	-	This digital output can be customized according to the user's requirements.
Bridge A DO4	(a long list of various inputs and outputs)	-	-	This digital output can be customized according to the user's requirements.

5.2.3 Remote and local control

Remote control

Table. 5.2.3 - 398. Control into excitation.

Name	Range	Step	Default	Description
Require permission to remote control	• No • Yes	-	No	When the Generator commander is controlled remotely, this parameter defines whether a digital input or the bus signal (enabled in the "Command excitation to remote control" parameter below) is also required for bus control. When "No" is selected, the commander is in bus control when controlled remotely.
Command excitation to remote control	• Off • On	-	Off	Activates and deactivates the remote bus controls. See also the parameter "Require permission to remote control" above.
Command AVR (remote)	• Off • On	-	Off	Selects whether or not the AVR control mode can be controlled remotely.

Name	Range	Step	Default	Description
Command FCR (remote)	• Off • On	-	Off	Selects whether or not the FCR control mode can be controlled remotely.
Command MVAR (remote)	• Off • On	-	Off	Selects whether or not the MVar control mode can be controlled remotely.
Command PF (remote)	• Off • On	-	Off	Selects whether or not the PF control mode can be controlled remotely.
Unload Q (remote)	• Off • On	-	Off	Selects whether or not the reactive power can be set to zero remotely.
Reset (remote)	• Off • On	-	Off	Selects whether or not the user can reset the excitation settings remotely.
AVR ref execute (remote)	• Off • On	-	Off	Selects whether or not the AVR reference can be executed remotely.
AVR ref value (remote)	0...450 000V	1V	0V	Sets the AVR reference value remotely.
FCR ref execute (remote)	• Off • On	-	Off	Selects whether or not the FCR reference can be executed remotely.
FCR ref value (remote)	0.00...100.00A (DC)	0.01A (DC)	0A (DC)	Sets the FCR reference value remotely.
MVar ref execute (remote)	• Off • On	-	Off	Selects whether or not the MVar reference can be executed remotely.
Read MVar ref from	• Value from comm bus • Value from AI	-	Value from comm bus	Selects the source from where the MVar reference is read, from the remote bus or from the analog channel.
MVar ref selection	• Scaled input 1 • Scaled input 2 • Scaled input 3 • Scaled input 4	-	Scaled input 1	Selects the analog channel from where the MVar reference is read. This setting is only visible when "Value from AI" is the selected for the "Read MVar ref from" parameter.
Update MVar ref automatically when threshold exceeds	• No • Yes	-	No	Selects whether or not the MVar reference is updated from the AI channel when the threshold value is exceeded. This setting is only visible when "Value from AI" is the selected for the "Read MVar ref from" parameter.

© Arcteq Relays Ltd
IM00021

Name	Range	Step	Default	Description
MVar ref change threshold (AI)	0.000…50.000%	0.001%	0.200%	This hysteresis parameter defines the threshold that must be exceeded for the reference to be updated from the selected AI channel. This setting is only visible when "Yes" is the selected for the "Update MVar ref automatically when threshold exceeds" parameter.
MVar ref value (remote)	–1000.0000...1000.0000MVar	0.0001MVar	0MVar	Sets the MVar reference value remotely.
PF ref execute (remote)	• Off • On	-	Off	Selects whether or not the PF reference can be executed remotely.
PF ref value (remote)	–1.00...1.00	0.01	0	Sets the PF reference value remotely.
Open FB command (remote)	• Off • On	-	Off	Selects whether or not the field breaker can be given an "Open" command remotely.
Close FB command (remote)	• Off • On	-	Off	Selects whether or not the field breaker can be given a "Closed" command remotely.
AVR speed 90 (remote)	• Off • On	-	Off	Selects whether or not the user can remotely set the generator to 90 % of its nominal speed, thus allowing for magnetization to begin.
Ind GB closed (remote)	• Off • On	-	Off	Selects whether or not the generator breaker can be closed remotely and indicated as such.
Island mode (remote)	• Off • On	-	Off	Selects whether or not the Generator commander can be set to Island mode remotely.
Command voltage matching (remote)	• Off • On	-	Off	Selects whether or not a voltage matching command can be given remotely.
Grid voltage (remote)	0.00...500.00	0.01	0	Sets the grid voltage remotely.
Reset remote received indications	• - • Reset	-	-	Resets the received indications memory. After resetting, the parameter returns back to "-".

Table. 5.2.3 - 399. Info out from excitation.

Name	Range	Step	Default	Description
Field current (remote)	–500.00…500.00	0.01	-	Displays the actual field current value.

Name	Range	Step	Default	Description
AVR ref actual (remote)	–500.00…500.00	0.01	-	Displays the actual AVR reference value.
FCR ref actual (remote)	–500.00…500.00	0.01	-	Displays the actual FCR reference value.
MVar ref actual (remote)	–500.00…500.00	0.01	-	Displays the actual MVar reference value.
PF ref actual (remote)	–500.00…500.00	0.01	-	Displays the actual PF reference value.
Mode AVR (remote)	• Off • On	-	Off	Indicates whether or not the AVR control mode can be directed remotely.
Mode FCR (remote)	• Off • On	-	Off	Indicates whether or not the FCR control mode can be directed remotely.
Mode MVar (remote)	• Off • On	-	Off	Indicates whether or not the MVar control mode can be directed remotely.
Mode PF (remote)	• Off • On	-	Off	Indicates whether or not the PF control mode can be directed remotely.

Local control

Table. 5.2.3 - 400. Local control

Name	Range	Step	Default	Description
Control mode	• DI control • PP control • Comm bus control	-	DI control	Indicates the selected control mode. The Generator commander can be controlled locally through digital inputs ("DI control"), through the process panel ("PP control"), or through the remote bus ("Comm bus control").
Scale panel	0.00…25 000.00p.u.	0.01p.u.	1.00p.u.	Scales the process panel values.
Step test enable/ Start test	• Off • On	-	Off	Enables and disables the step test. A step test changes the reference value of the currently selected control mode, in line with the test waveform, to see how it takes effect.
Test max time	0.00…1800.00s	0.01s	300.00s	Defines the maximum time for the step test. When this time has elapsed, the step test is automatically disabled.
Step test time left	-	-	-	Indicates the remaining time for the step test.
Step test output now	–5.000…5.000p.u.	0.001p.u.	0.000p.u.	Indicates the current test step effect to the reference value.
Test waveform	Square Sinusoidal ("Sinus")	-		Selects the waveform used in the step test.

© Arcteq Relays Ltd
IM00021

Name	Range	Step	Default	Description
Test square amplitude	–5.000…5.000	0.001	0.000	Defines the amplitude for the square test steps, when "Square" is the selected test waveform.
Test square duration	0.000...300.000s	0.005s	10.000s	Defines the duration for the square test steps, when "Square" is the selected test waveform.
Test sinusoidal frequency	0.00...25.00Hz	0.01Hz	0.00Hz	Defines the frequency for the sinusoidal waves, when "Sinusoidal" ("Sinus") is the selected test waveform.
Test sinusoidal amplitude	0.00...25.00p.u.	0.01p.u.	0.00p.u.	Defines the amplitude for the sinusoidal waves, when "Sinusoidal" ("Sinus") is the selected test waveform.

5.2.4 Excitation internal parameters

Table. 5.2.4 - 401. Excitation constants.

Name	Range	Step	Default	Description
Use current to define sync unsync modes	• Only BRK statuses • Current and BRK statuses	-	Current and BRK statuses	Selects the method of defining the synchronized and unsynchronized modes. See also the parameter "Stator current level defining synchronized mode".
Stator current level defining synchronized mode	-0.100…25.000	0.001	0.025	When "Current and BRK statuses" is selected for the "Use current to define sync unsync modes" parameter above, this defines the stator current threshold value. Together with the breaker status they define the synchronization status. If the BRK status is ON and this threshold value is exceeded, the status is changed to "Synchronized".
Time delay for defining synchronized mode	0.000…1800.000s	0.005s	0.500s	Defines the time delay that takes place before entering the synchronized mode.
Stator current level defining unsynchronized mode	–0.100…25.000	0.001	0.005	When "Current and BRK statuses" is selected for the "Use current to define sync unsync modes" parameter above, this defines the stator current threshold value. If the BRK status is OFF and this threshold value is not exceeded, the status is changed to "Unsynchronized".
Time delay for defining unsynchronized mode	0.000…1800.000s	0.005s	0.100s	Defines the time delay, before entering the unsynchronised mode.
Minimum frequency deviation defining Island mode	0.000…25.000Hz	0.001Hz	0.500Hz	Defines the minimum frequency deviation required to enter the island mode.

Name	Range	Step	Default	Description
Delay time to go to parameters for Island operation	0.000…1800.000s	0.005s	4.000s	Defines the delay time for entering the island mode.
Filter time for calculation of frequency derivative	0.000…1800.000s	0.005s	0.500s	Defines the filter time for calculation of frequency derivative; used to detect the disturbed mode.
Frequency derivative defining disturbed mode	0.000…25.000Hz/s	0.001Hz/s	2.100Hz/s	Defines the speed of the change in frequency; used to detect the disturbed mode.
Hysteresis setting for MVAR and PF control loop	0.000…0.100p.u.	0.001p.u.	0.010p.u.	Defines the hysteresis for MVar and PF control.
Maximum time for setting of Mvar when MVarSettingEnableis true	0.000…1800.000s	0.005s	60.000s	Defines the maximum time for unloading the reactive power (Q). It also defines the maximum time limit for changing the reactive power to the reference value. If it is not reached by this time has passed, the control mode MVar goes off.
Rate of excitation rise 0…80 % on starting	0.000…25.000	0.001	0.200	Defines the rate of excitation rise from 0 % to 80 % from the reference value, during excitation starting. Setting value can be changed with setting group control. See chapter "Excitation setting group selection".
Rate of excitation rise 80…100 % on starting	0.000…25.000	0.001	0.050	Defines the rate of excitation rise from 80 % to 100 % from the reference value, during excitation starting. See chapter "Excitation setting group selection".
Start level of excitation rise on starting	0.000…25.000p.u.	0.001p.u.	0.000p.u.	Defines the start level of excitation (in per-unit value), during excitation starting. This parameter is used in conjunction with field flashing. See also the parameter "Field flashing" at *Excitation → Excitation → Power circuit parameters*.
Field forcing voltage factor (neg.value)	-1.0…1.0	0.01	-0.6	Defines the control signal's zero point.
Force PWM control signal	• Disabled • Forced value • Open loop reference	-	Disabled	Enables and disables the forcing of PWM control signal values. If enabled, there are two ways to adjust the values. The "Open loop reference" option refers to adjustment done with the "Test mode increase" and "Test mode decrease" commands. See these parameters at *Excitation → I/O → DI inputs to excitation*. The "Forced value" option refers to adjustment done with the "Force PWM control signal value" parameter. See the "Force PWM control signal value" parameter below.

© Arcteq Relays Ltd
IM00021

Name	Range	Step	Default	Description
Force PWM control signal value	0.000…1.000	0.001	0.000	Defines the forced value, when the "Forced value" option is selected for the "Force PWM control signal" parameter above.
AVR reference follow filter T constant	0.005…50.000s	0.005s	0.010s	Defines the time that precedes the mode change when the control mode is changed to AVR. The follow filter reference is based on this value. For example, if the mode change takes place at 13:01:22.456 and this parameter has been set to "1.000 s", the follow filter reference is fetched from 13:01:21.456.
FCR reference follow filter T constant	0.005…50.000s	0.005s	0.010s	Defines the time that precedes the mode change when the control mode is changed to FCR. The follow filter reference is based on this value. For example, if the mode change takes place at 13:01:22.456 and this parameter has been set to "1.000 s", the follow filter reference is fetched from 13:01:21.456.

Table. 5.2.4 - 402. Excitation internal calculations.

Name	Range	Step	Default	Description
Current positive sequence measurement (internal GMAG)	–500.00…500.00	0.01	–50.00	Displays the positive current sequence measurement.
Current negative sequence measurement (internal GMAG)	–500.00…500.00	0.01	–50.00	Displays the negative current sequence measurement.
Measured current filtering (low pass)	0.000…1800.000s	0.005s	0s	Displays the time constant of the generator's current measurement filtering.
Current positive sequence measurement (filtered internal GMAG)	–500.00…500.00	0.01	–50.00	Displays the positive current sequence measurement (filtered).
Current negative sequence measurement (filtered internal GMAG)	–500.00…500.00	0.01	–50.00	Displays the negative current sequence measurement (filtered).
Voltage positive sequence measurement (internal GMAG)	–500.00…500.00	0.01	–50.00	Displays the positive voltage sequence measurement.
Voltage negative sequence measurement (internal GMAG)	–500.00…500.00	0.01	–50.00	Displays the negative voltage sequence measurement.
Measured voltage filtering (low pass)	0.000…1800.000s	0.005s	0s	Displays the time constant of the generator's voltage measurement filtering.

Name	Range	Step	Default	Description
Voltage positive sequence measurement (filtered internal GMAG)	–500.00…500.00	0.01	–50.00	Displays the positive voltage sequence measurement (filtered).
Voltage negative sequence measurement (filtered internal GMAG)	–500.00…500.00	0.01	–50.00	Displays the negative voltage sequence measurement (filtered).
Active power measurement (internal GMAG)	–500.00…500.00	0.01	–50.00	Displays the active power measurement.
Reactive power measurement (internal GMAG)	–500.00…500.00	0.01	–50.00	Displays the reactive power measurement.
Measured powers filtering (low pass)	0.000…1800.000s	0.005s	0s	Displays the time constant of the generator's powers measurement filtering.
Active power measurement (filtered internal GMAG)	–500.00…500.00	0.01	–50.00	Displays the active power measurement (filtered).
Reactive power measurement (filtered internal GMAG)	–500.00…500.00	0.01	–50.00	Displays the reactive power measurement (filtered).
Active current measurement (internal GMAG)	–500.00…500.00	0.01	–50.00	Displays the active current measurement.
Reactive current measurement (internal GMAG)	–500.00…500.00	0.01	–50.00	Displays the reactive current measurement.
Active current measurement (filtered internal GMAG)	–500.00…500.00	0.01	–50.00	Displays the active current measurement (filtered).
Reactive current measurement (filtered internal GMAG)	–500.00…500.00	0.01	–50.00	Displays the reactive current measurement (filtered).
Susceptance measurement (internal GMAG)	–500.00…500.00	0.01	–50.00	Displays the susceptance measurement.
Conductance measurement (internal GMAG)	–500.00…500.00	0.01	–50.00	Displays the conductance measurement.
Iplq compensation	–500.00…500.00	0.01	–50.00	Displays the additional compensation from active and apparent powers for voltage control.
PWM control signal	–500.00…500.00	0.01	–50.00	Displays the bridge control signal of the power measurement.
AVR reference	–500.00…500.00	0.01	–50.00	Displays the reference value that is written into the AVR.
FCR reference	–500.00…500.00	0.01	–50.00	Displays the reference value that is written into the FCR.
Open loop reference	–500.00…500.00	0.01	–50.00	Displays the open loop reference.

© Arcteq Relays Ltd
IM00021

Name	Range	Step	Default	Description
FCL instant limit	–500.00…500.00	0.01	–50.00	Displays the limit value for the instant field current limiter.
FCL delayed limit	–500.00…500.00	0.01	–50.00	Displays the limit value for the delayed field current limiter.
Reference MVar	–500.00…500.00	0.01	–50.00	Displays the MVar reference value that goes into the control circuits.
Reference PF	–500.00…500.00	0.01	–50.00	Displays the PF reference value that goes into the control circuits.
MVar ref	–500.00…500.00	0.01	–50.00	Displays the reference value that is written into the MVar control.
Tan phi	–500.00…500.00	0.01	–50.00	Displays the power factor tan φ.
PFref	–500.00…500.00	0.01	–50.00	Displays the reference value that is written into the power factor control.
Speed MVar Ctrl	–500.00…500.00	0.01	–50.00	-
AVR ref ramp	–500.00…500.00	0.01	–50.00	Displays the AVR reference value that changes into a new AVR reference value in a set speed.
AVR ref H1	–500.00…500.00	0.01	–50.00	Displays the maximum limit of the AVR reference value when idle.
AVR ref H2	–500.00…500.00	0.01	–50.00	Displays the maximum limit of the AVR reference value when connected to the grid.
FCR ref ramp	–500.00…500.00	0.01	–50.00	Displays the FCR reference value that changes into a new FCR reference value in a set speed.
Reference AVR	–500.00…500.00	0.01	–50.00	Displays the AVR reference value that goes into the control circuits.
Unload reactive power reference	–500.00…500.00	0.01	–50.00	Displays the reference value for unloading reactive power.
Rated amps	–500.00…500.00	0.01	–50.00	Displays the rated current of the generator.
Control signal max. limit	–500.00…500.00	0.01	–50.00	Displays the maximum limit for the control signal.
Control signal min. limit	–500.00…500.00	0.01	–50.00	Displays the minimum value for the control signal.
Cos phi	–500.00…500.00	0.01	–50.00	Displays the power factor cos φ.
AVR ref bus	–500.00…500.00	0.01	–50.00	Displays the AVR reference value given remotely via the bus.
FCR ref bus	–500.00…500.00	0.01	–50.00	Displays the FCR reference value given remotely via the bus.

Name	Range	Step	Default	Description
MVar ref bus	–500.00…500.00	0.01	–50.00	Displays the MVar reference value given remotely via the bus.
PF ref bus	–500.00…500.00	0.01	–50.00	Displays the power factor reference value given remotely via the bus.
Step test	–500.00…500.00	0.01	–50.00	Displays the step response reference value.
Reference display (AVR/ FCR)	• Per unit • V and A • kV and A	-	Per unit	Defines the unit in which the AVR and FCR reference values are presented.
AVR reference atm.	–500.00…50 000.00	0.01	–50.00	Displays the reference value of the AVR control mode at the moment.
AVR measured atm.	–500.00…50 000.00	0.01	–50.00	Dislays the measured value of the AVR control mode at the moment.
FCR reference atm.	–500.00…50 000.00	0.01	–50.00	Displays the reference value of the FCR control mode at the moment.
FCR measured atm.	–500.00…50 000.00	0.01	–50.00	Dislays the measured value of the FCR control mode at the moment.
Reference display (MVar/PF)	• Per unit • MVar • kVar	-	Per unit	Defines the unit in which the MVar and PF reference values are presented.
MVar reference atm.	–500.00…50 000.00	0.01	–50.00	Displays the reference value of the MVar control mode at the moment.
MVar measured atm.	–500.00…50 000.00	0.01	–50.00	Dislays the measured value of the MVar control mode at the moment.
PF reference atm.	–500.000…50 000.000	0.001	–50.00	Displays the reference value of the PF control mode at the moment.
PF measured atm.	–500.000…50 000.000	0.001	–50.00	Dislays the measured value of the PF control mode at the moment.

5.2.5 Excitation setting group selection

Generator commander excitation can have up to eight (8) separate setting groups. The Setting group selection function block controls the availability and selection of the setting groups. By default, only Setting group 1 (SG1) is active and therefore the selection logic is idle. When more than one setting group is enabled, the setting group selector logic takes control of the setting group activations based on the logic and conditions the user has programmed. Excitation setting group selection operates separately from the general setting group selection function.

© Arcteq Relays Ltd
IM00021

Figure. 5.2.5 - 221. Simplified function block diagram of the setting group selection function.

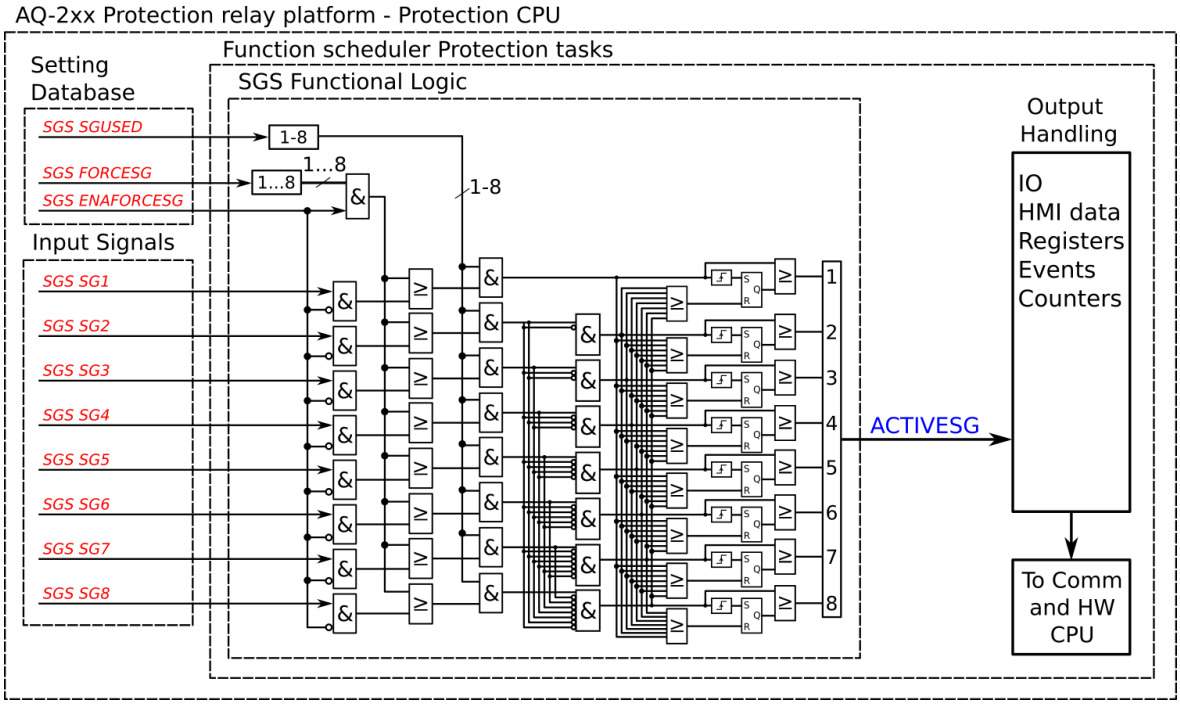

Setting group selection can be applied to each of the setting groups individually by activating one of the various internal logic inputs and connected digital inputs. The user can also force any of the setting groups on when the "Force SG change" setting is enabled by giving the wanted quantity of setting groups as a number in the communication bus or in the local HMI, or by selecting the wanted setting group from *Control → Setting groups*. When the forcing parameter is enabled, the automatic control of the local device is overridden and the full control of the setting groups is given to the user until the "Force SG change" is disabled again.

Setting groups can be controlled either by pulses or by signal levels. Setting groups follow a hierarchy in which setting group 1 has the highest priority, setting group 2 has second highest priority etc. If a static activation signal is given for two setting groups, the setting group with higher priority will be active. If setting groups are controlled by pulses, the setting group activated by pulse will stay active until another setting groups receives and activation signal.

Figure. 5.2.5 - 222. Example sequences of group changing (control with pulse only, or with both pulses and static signals).

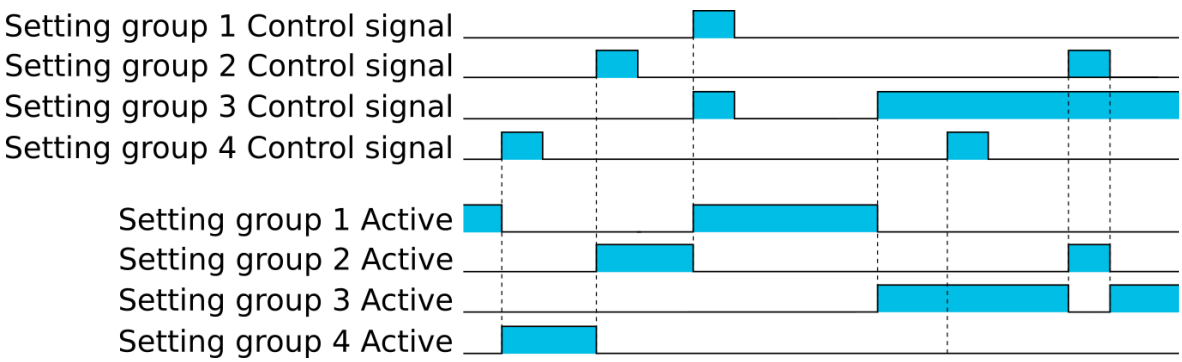

Settings and signals

The settings of the setting group control function include the active setting group selection, the forced setting group selection, the enabling (or disabling) of the forced change, the selection of the number of active setting groups in the application, as well as the selection of the setting group changed remotely. If the setting group is forced to change, the corresponding setting group must be enabled and the force change must be enabled. Then, the setting group can be set from communications or from HMI to any available group. If the setting group control is applied with static signals right after the "Force SG" parameter is released, the application takes control of the setting group selection.

Table. 5.2.5 - 403. Settings of the setting group selection function.

Name	Range	Default	Description
Active setting group	• SG1 • SG2 • SG3 • SG4 • SG5 • SG6 • SG7 • SG8	SG1	Displays which setting group is active.
Force setting group	• None • SG1 • SG2 • SG3 • SG4 • SG5 • SG6 • SG7 • SG8	None	The selection of the overriding setting group. After "Force SG change" is enabled, any of the configured setting groups in the device can be overriden. This control is always based on the pulse operating mode. It also requires that the selected setting group is specifically controlled to ON after "Force SG" is disabled. If there are no other controls, the last set setting group remains active.
Force setting group change	• Disabled • Enabled	Disabled	The selection of whether the setting group forcing is enabled or disabled. This setting has to be active before the setting group can be changed remotely or from a local HMI. This parameter overrides the local control of the setting groups and it remains on until the user disables it.
Used setting groups	• SG1 • SG1...2 • SG1...3 • SG1...4 • SG1...5 • SG1...6 • SG1...7 • SG1...8	SG1	The selection of the activated setting groups in the application. Newly-enabled setting groups use default parameter values.
Remote setting group change	• None • SG1 • SG2 • SG3 • SG4 • SG5 • SG6 • SG7 • SG8	None	This parameter can be controlled through SCADA to change the setting group remotely. Please note that if a higher priority setting group is being controlled by a signal, a lower priority setting group cannot be activated with this parameter.

© Arcteq Relays Ltd
IM00021

Table. 5.2.5 - 404. Signals of the setting group selection function.

Name	Description
Setting group 1	The selection of Setting group 1 ("SG1"). Has the highest priority input in setting group control. Can be controlled with pulses or static signals. If static signal control is applied, no other SG requests will be processed.
Setting group 2	The selection of Setting group 2 ("SG2"). Has the second highest priority input in setting group control. Can be controlled with pulses or static signals. If static signal control is applied, no requests with a lower priority than SG1 will be processed.
Setting group 3	The selection of Setting group 3 ("SG3"). Has the third highest priority input in setting group control. Can be controlled with pulses or static signals. If static signal control is applied, no requests with a lower priority than SG1 and SG2 will be processed.
Setting group 4	The selection of Setting group 4 ("SG4"). Has the fourth highest priority input in setting group control. Can be controlled with pulses or static signals. If static signal control is applied, no requests with a lower priority than SG1, SG2 and SG3 will be processed.
Setting group 5	The selection of Setting group 5 ("SG5"). Has the fourth lowest priority input in setting group control. Can be controlled with pulses or static signals. If static signal control is applied, SG6, SG7 and SG8 requests will not be processed.
Setting group 6	The selection of Setting group 6 ("SG6"). Has the third lowest priority input in setting group control. Can be controlled with pulses or static signals. If static signal control is applied, SG7 and SG8 requests will not be processed.
Setting group 7	The selection of Setting group 7 ("SG7"). Has the second lowest priority input in setting group control. Can be controlled with pulses or static signals. If static signal control is applied, only SG8 requests will not be processed.
Setting group 8	The selection of Setting group 8 ("SG8"). Has the lowest priority input in setting group control. Can be controlled with pulses or static signals. If static signal control is applied, all other SG requests will be processed regardless of the signal status of this setting group.

Events

The excitation setting group selection function block (abbreviated "SGS2" in event block names) generates events from the status changes in the events listed below. The user can select which event messages are stored in the main event buffer: ON, OFF, or both. The events triggered by the function are recorded with a time stamp.

Table. 5.2.5 - 405. Event messages.

Event block name	Event names
SGS2	SG2...8 Enabled/Disabled
SGS2	SG1...8 Request ON/OFF
SGS2	Remote Change SG Request ON/OFF
SGS2	Local Change SG Request ON/OFF
SGS2	Force Change SG ON/OFF
SGS2	SG Request Fail Not configured SG ON/OFF
SGS2	Force Request Fail Force ON/OFF

Event block name	Event names
SGS2	SG Req. Fail Lower priority Request ON/OFF
SGS2	SG1...8 Active ON/OFF

5.2.6 Events recorded by the Generator commander

Table. 5.2.6 - 406. Excitation events.

	Event block name	Event code	Event name	Description
Control EventMaskLo	GMAG	0	FCL on limit ON	The delayed excitation field current limiter is running.
	GMAG	1	FCL on limit OFF	The delayed excitation field current limiter is not running.
	GMAG	2	UEL in operation ON	The underexcitation limiter is running.
	GMAG	3	UEL in operation OFF	The underexcitation limiter is not running.
	GMAG	4	SCL overexcitation ON	The stator current limiter is running (overexcited).
	GMAG	5	SCL overexcitation OFF	The stator current limiter is not running (overexcited).
	GMAG	6	SCL underexcitation ON	The stator current limiter is running (underexcited).
	GMAG	7	SCL underexcitation OFF	The stator current limiter is not running (underexcited).
	GMAG	8	High IP ON	High active current (used in the SCL) is ON.
	GMAG	9	High IP OFF	High active current (used in the SCL) is OFF.
	GMAG	10	Inst FCL ON	The instantaneous field current limiter is running.
	GMAG	11	Inst FCL OFF	The instantaneous field current limiter is not running.
	GMAG	12	Low supply voltage ON	The low supply voltage ON.
	GMAG	13	Low supply voltage OFF	The low supply voltage OFF.
	GMAG	14	FCR mode ON	The FCR mode is selected.

© Arcteq Relays Ltd
IM00021

	Event block name	Event code	Event name	Description
	GMAG	15	FCR mode OFF	The FCR mode is unselected.
	GMAG	16	AVR mode ON	The AVR mode is selected.
	GMAG	17	AVR mode OFF	The AVR mode is unselected.
	GMAG	18	Low meas volt ON	The low measured voltage ON.
	GMAG	19	Low meas volt OFF	The low measured voltage OFF.
	GMAG	20	IGBT shorted ON	The IGBT is in short cut.
	GMAG	21	IGBT shorted OFF	The IGBT is not in short cut.
	GMAG	22	PWM enable ON	The bridge is in the run mode.
	GMAG	23	PWM enable OFF	The bridge is not in the run mode.
	GMAG	24	PWM DO1 ON	The bridge digital output 1 is ON.
	GMAG	25	PWM DO1 OFF	The bridge digital output 1 is OFF.
	GMAG	26	PWM DO2 ON	The bridge digital output 2 is ON.
	GMAG	27	PWM DO2 OFF	The bridge digital output 2 is OFF.
	GMAG	28	Rectifier trip ON	The rectifier trip through an excitation common trip is ON.
	GMAG	29	Rectifier trip OFF	The rectifier trip through an excitation common trip is OFF.
	GMAG	30	Temp high bridge 1 ON	High temperature on Bridge 1 is ON.
	GMAG	31	Temp high bridge 1 OFF	High temperature on Bridge 1 is OFF.
Control EventMaskHi	GMAG	32	Temp high bridge 2 ON	High temperature on Bridge 2 is ON.
	GMAG	33	Temp high bridge 2 OFF	High temperature on Bridge 2 is OFF.
	GMAG	34	Excitation ON	Excitation is running.
	GMAG	35	Exc On Cmd OFF	The excitation "Run" command is OFF.
	GMAG	36	Excitation OFF	Excitation is not running.

	Event block name	Event code	Event name	Description	
	GMAG	37	Exc Off Cmd OFF	The excitation "Off" command is OFF.	
	GMAG	40	Overcurrent ON	The excitation overcurrent trip is ON.	
	GMAG	41	Overcurrent OFF	The excitation overcurrent trip is OFF.	
	GMAG	42	PWM DI1 ON	Indicates the bridge's running (online) status.	
	GMAG	43	PWM DI1 OFF	Indicates the bridge's running (online) status.	
	GMAG	44	PWM DI2 ON	Indicates the bridge's running (online) status.	
	GMAG	45	PWM DI2 OFF	Indicates the bridge's running (online) status.	
	GMAG	46	PWM DI3 ON	Indicates the bridge's running (online) status.	
	GMAG	47	PWM DI3 OFF	Indicates the bridge's running (online) status.	
	GMAG	48	PWM DI4 ON	Indicates the bridge's running (online) status.	
	GMAG	49	PWM DI4 OFF	Indicates the bridge's running (online) status.	
	GMAG	50	PWM DI5 ON	Indicates the bridge's running (online) status.	
	GMAG	51	PWM DI5 OFF	Indicates the bridge's running (online) status.	
	GMAG	52	PWM DI6 ON	Indicates the bridge's running (online) status.	
	GMAG	53	PWM DI6 OFF	Indicates the bridge's running (online) status.	
	GMAG	54	PWM DI7 ON	Indicates the bridge's running (online) status.	
	GMAG	55	PWM DI7 OFF	Indicates the bridge's running (online) status.	
	GMAG	56	PWM DI8 ON	Indicates the bridge's running (online) status.	
	GMAG	57	PWM DI8 OFF	Indicates the bridge's running (online) status.	

© Arcteq Relays Ltd
IM00021

	Event block name	Event code	Event name	Description	
		GMAG1	0	Synchronized ON	The excitation synchronized mode is ON.
		GMAG1	1	Synchronized OFF	The excitation synchronized mode is OFF.
GMAG1	Normal EventMaskLo	2	Island mode ON	The excitation island mode is ON.	
GMAG1		3	Island mode OFF	The excitation island mode is OFF.	
GMAG1		4	FB is open ON	The field breaker is open ON.	
GMAG1		5	FB is open OFF	The field breaker is open OFF.	
GMAG1		6	FB is closed ON	The field breaker is closed ON.	
GMAG1		7	FB is closed OFF	The field breaker is closed OFF.	
GMAG1		8	Field flashing ON	Field flashing is ON.	
GMAG1		9	Field flashing OFF	Field flashing is OFF.	
GMAG1		10	Long field flashing ON	Long field flashing is ON.	
GMAG1		11	Long field flashing OFF	Long field flashing is OFF.	
GMAG1		12	Test mode ON	The excitation test mode is ON.	
GMAG1		13	Test mode OFF	The excitation test mode is OFF.	
GMAG1		14	Phase retard ON	Control signals going to minimum during the stop ("phase retard") is ON.	
GMAG1		15	Phase retard OFF	Control signals going to minimum during the stop ("phase retard") is OFF.	
GMAG1		16	Reset ON	The excitation reset is ON.	
GMAG1		17	Reset OFF	The excitation reset is OFF.	
GMAG1		18	Command AVR ON	The AVR command is ON.	
GMAG1		19	Command AVR OFF	The AVR command is OFF.	

	Event block name	Event code	Event name	Description
GMAG1		20	Command FCR ON	The FCR command is ON.
GMAG1		21	Command FCR OFF	The FCR command is OFF.
GMAG1		22	Command MVar ON	The MVar command is ON.
GMAG1		23	Command MVar OFF	The MVar command is OFF.
GMAG1		24	Command PF ON	The PF command is ON.
GMAG1		25	Command PF OFF	The PF command is OFF.
GMAG1		26	Excitation run order ON	The excitation run order is ON.
GMAG1		27	Excitation run order OFF	The excitation run order is OFF.
GMAG1		28	Increase ON	The excitation reference value increase is ON.
GMAG1		29	Increase OFF	The excitation reference value increase is OFF.
GMAG1		30	Decrease ON	The excitation reference value decrease is ON.
GMAG1		31	Decrease OFF	The excitation reference value decrease is OFF.
Normal EventMaskMid	GMAG1	32	AVR bus ON	The AVR command is ON, controlled through the remote bus.
	GMAG1	33	AVR bus OFF	The AVR command is OFF, controlled through the remote bus.
	GMAG1	34	FCR bus ON	The FCR command is ON, controlled through the remote bus.
	GMAG1	35	FCR bus OFF	The FCR command is OFF, controlled through the remote bus.
	GMAG1	36	MVar Bus On	The MVAR command is ON, controlled through the remote bus.
	GMAG1	37	MVar bus OFF	The MVAR command is OFF, controlled through the remote bus.
	GMAG1	38	PF bus ON	The PF command is ON, controlled through the remote bus.
	GMAG1	39	PF bus OFF	The PF command is OFF, controlled through the remote bus.

© Arcteq Relays Ltd
IM00021

	Event block name	Event code	Event name	Description
	GMAG1	40	Overriding control ON	The MVar or PF control is ON and can change the reference value.
	GMAG1	41	Overriding control OFF	The MVar or PF control is OFF and cannot change the reference value.
	GMAG1	42	Increase MVar/ PF ON	The MVar or PF control is ON and increases the reference value.
	GMAG1	43	Increase MVar/ PF OFF	The MVar or PF control is OFF and does not increase the reference value.
	GMAG1	44	Decrease MVar/PF ON	The MVar or PF control is ON and decreases the reference value.
	GMAG1	45	Decrease MVar/PF OFF	The MVar or PF control is OFF and does not decrease the reference value.
	GMAG1	46	Low Q error ON	The low Q error is ON.
	GMAG1	47	Low Q error OFF	The low Q error is OFF.
	GMAG1	48	AVR ref on lowlim ON	The AVR reference value on the low limit is ON.
	GMAG1	49	AVR ref on lowlim OFF	The AVR reference value on the low limit is OFF.
	GMAG1	50	AVR ref on highlim ON	The AVR reference value on the high limit is ON.
	GMAG1	51	AVR ref on highlim OFF	The AVR reference value on the high limit is OFF.
	GMAG1	52	FCR ref on lowlim ON	The FCR reference value on the low limit is ON.
	GMAG1	53	FCR ref on lowlim OFF	The FCR reference value on the low limit is OFF.
	GMAG1	54	FCR ref on highlim ON	The FCR reference value on the high limit is ON.
	GMAG1	55	FCR ref on highlim OFF	The FCR reference value on the high limit is OFF.
	GMAG1	56	VHZ limit active ON	The V/Hz limiter is running.
	GMAG1	57	VHZ limit active OFF	The V/Hz limiter is not running.

	Event block name	Event code	Event name	Description
	GMAG1	58	Process panel activated ON	The Generator commander's control mode "GMAG ProcessPanel activated" is ON, i.e. the device is controlled through the process panel.
	GMAG1	59	Process panel activated OFF	The Generator commander's control mode "GMAG ProcessPanel activated" is OFF.
	GMAG1	60	Parameters active ON	The Generator commander's control mode "GMAG Parameters (DI) activated" is ON, i.e. the device is controlled through digital inputs.
	GMAG1	61	Parameters active OFF	The Generator commander's control mode "GMAG Parameters (DI) activated" is OFF.
	GMAG1	62	Bus activated ON	The remote bus is active.
	GMAG1	63	Bus activated OFF	The remote bus is not active.
Normal EventMaskMid2	GMAG2	0	Reset and excitation off ON	The excitation reset is ON when the excitation is not running.
	GMAG2	1	Reset and excitation off OFF	The excitation reset is OFF when the excitation is not running.
	GMAG2	2	Field breaker does not open ON	The indication "Field breaker does not open" is ON.
	GMAG2	3	Field breaker does not open OFF	The indication "Field breaker does not open" is OFF.
	GMAG2	4	New reference start ON	New ref start written to the reference value is ON.
	GMAG2	5	New reference start OFF	New ref start written to the reference value is OFF.
	GMAG2	6	GB is closed ON	The indication "Generator breaker is closed" is ON.
	GMAG2	7	GB is closed OFF	The indication "Generator breaker is closed" is OFF.
	GMAG2	8	FB off GB on ON	A trip indication is ON, when the field breaker is open and the generator breaker is closed.

© Arcteq Relays Ltd
IM00021

	Event block name	Event code	Event name	Description
	GMAG2	9	FB off GB on OFF	A trip indication is OFF, when the field breaker is open and the generator breaker is closed.
	GMAG2	10	Disturbed mode ON	The disturbed mode indication is ON.
	GMAG2	11	Disturbed mode OFF	The disturbed mode indication is OFF.
	GMAG2	12	Disturbed mode pulse ON	The disturbed mode pulse is ON.
	GMAG2	13	Disturbed mode pulse OFF	The disturbed mode pulse is OFF.
	GMAG2	14	Following line voltage ON	The indication "Voltage adjustment to another grid" is ON.
	GMAG2	15	Following line voltage OFF	The indication "Voltage adjustment to another grid" is OFF.
	GMAG2	16	Test square enable ON	The "Step test square enable" indication is ON.
	GMAG2	17	Test square enable OFF	The "Step test square enable" indication is OFF.
	GMAG2	18	Order open FB ON	The "Field breaker open command" indication is ON.
	GMAG2	19	Order open FB OFF	The "Field breaker open command" indication is OFF.
	GMAG2	20	Order close FB ON	The "Field breaker close command" indication is ON.
	GMAG2	21	Order close FB OFF	The "Field breaker close command" indication is OFF.
	GMAG2	22	Q unloaded ON	The "Reactive power unloading function" indication is ON.
	GMAG2	23	Q unloaded OFF	The "Reactive power unloading function" indication is OFF.
	GMAG2	24	MVar ref on high ON	The "MVar reference on the high limit" indication is ON.
	GMAG2	25	MVar ref on high OFF	The "MVar reference on the high limit" indication is OFF.
	GMAG2	26	MVar ref on low ON	The "MVar reference on the low limit" indication is OFF.
	GMAG2	27	MVar ref on low OFF	The "MVar reference on the low limit" indication is OFF.

	Event block name	Event code	Event name	Description
	GMAG2	28	PF ref on high ON	The "PF reference on the high limit" indication is ON.
	GMAG2	29	PF ref on high OFF	The "PF reference on the high limit" indication is OFF.
	GMAG2	30	PF ref on low ON	The "PF reference on the low limit" indication is ON.
	GMAG2	31	PF ref on low OFF	The "PF reference on the low limit" indication is OFF.
Normal EventMaskHi	GMAG2	32	AVR start ref ON	The indication of writing the "AVR reference on start" as the AVR reference value is ON.
	GMAG2	33	AVR start ref OFF	The indication of writing the "AVR reference on start" as the AVR reference value is OFF.
	GMAG2	34	FCR start ref ON	The indication of writing the "FCR reference on start" as the FCR reference value is ON.
	GMAG2	35	FCR start ref OFF	The indication of writing the "FCR reference on start" as the FCR reference value is OFF.
	GMAG2	36	Unload MVar ON	The MVar unloading is ON.
	GMAG2	37	Unload MVar OFF	The MVar unloading is OFF.
	GMAG2	38	PWM DO3 ON	The bridge's digital output 3 is ON.
	GMAG2	39	PWM DO3 OFF	The bridge's digital output 3 is OFF.
	GMAG2	40	PWM DO4 ON	The bridge's digital output 4 is ON.
	GMAG2	41	PWM DO4 OFF	The bridge's digital output 4 is OFF.
	GMAG2	42	MVar mode ON	The MVar mode is ON.
	GMAG2	43	MVar mode OFF	The MVar mode is OFF.
	GMAG2	44	PF mode ON	The PF mode is ON.
	GMAG2	45	PF mode OFF	The PF mode is OFF.
	GMAG2	46	PSS enabled ON	The power system stabilizer is ON.
	GMAG2	47	PSS enabled OFF	The power system stabilizer is OFF.

© Arcteq Relays Ltd
IM00021

	Event block name	Event code	Event name	Description	
	GMAG2	48	PSS blocked ON	The power system stabilizer blocking is ON.	
	GMAG2	49	PSS blocked OFF	The power system stabilizer blocking is OFF.	

5.2.7 Other control functions

5.2.7.1 Reference values

The reference value of the active control mode can be adjusted in two ways: locally through the device's HMI panel, and remotely through a bus interface or with increase and decrease signals. When a control mode is not in operation, it is always in the follow-up mode to avoid bumps when it is activated.

5.2.7.2 Start and stop functions

When the generator starts, the governor system increases the speed. When the generator is at 90 % of its maximum speed, the field breaker is closed and the reference value begins to rise to a pre-set level according to a soft-start ramp. If the grid voltage can be measured, the level follows the grid voltage and thus makes the generator's synchronization easier.

During a normal stop of the generator, the command "Unload reactive powers" can be sent to the protection relay. This drops the reactive power to zero and issues a status signal. When the command "Open field breaker" is sent to the protection relay, the excitation is forced to zero for one second before the field breaker is opened. This allows the saving of the field breaker's lifetime.

During an emergency trip a hardwired trip command is sent directly to the field breaker.

5.2.7.3 Test mode

An open loop controller can be activated for testing and commissioning purposes. The activation and closing of the field breaker does not cause excitation, keeping it at zero. The excitation is then adjusted with the increase and decrease commands.

5.2.7.4 Test functions

When the test function is activated, either locally or remotely, an open loop controller is activated. The output of the power rectifier can be controlled by "Increase" and "Decrease" commands. The other control loops goes into a follow-up mode, which enables a seamless transfer whenever the test mode is deactivated.

5.3 Redundancy

5.3.1 Single system

The system is prepared to have one ("Single") or two ("Redundant") controllers. In the single system, one controller is used to control one power rectifier.

5.3.2 Controller redundancy

A redundant system includes two controllers and multiple power rectifiers. One of the controllers is active, while the other is on hot standby; upon the failure of the primary controller, an automatic change-over to the redundant controller immediately takes place and thus there is no interruption in the operation.

5.3.3 Power rectifier redundancy

The system can have one or more (redundant) power rectifiers. The redundant rectifiers can be in a "1+1" or a "n–1" configuration.

In the "1+1" redundancy configuration, one rectifier is in operation while the other one on hot standby. If the operative rectifier fails, there is an automatic change-over to the redundant one and it takes over the operation.

In the "n–1" redundancy configuration, there are at least three rectifiers in parallel operation at the same time. If one of them fails, the operations continue in the remaining rectifiers.

5.4 Others

5.4.1 Diagnostics

The field breaker is monitored with regard to the number of operations as well as the accumulated breaking current.

The excitation system is monitored with regard to the total number of running hours as well as the accumulated field forcing as "current-seconds" (that is, A × s above the rated current).

5.4.2 Real-time trending

The following signals are available for real-time trending:

- Positive sequence voltage
- Positive sequence current
- Three-phase active power
- Three-phase reactive power
- Frequency
- DC field current
- DC field voltage
- Control signal
- PSS signal

Their update time is 10 ms. Trending is done by a separate PC software tool, and it is primarily intended for tuning the control loops.

© Arcteq Relays Ltd
IM00021

6 Communication

6.1 Connections menu

"Connections" menu is found under "Communication" menu. It contains all basic settings of the default back panel ethernet port and RS-485 serial port as well as settings of communication option cards.

Table. 6.1 - 407. Ethernet settings.

Name	Range	Description
IP address	0.0.0.0...255.255.255.255	Set IP address of the ethernet port in the back of the device.
Netmask	0.0.0.0...255.255.255.255	Set netmask of the ethernet port in the back of the device.
Gateway	0.0.0.0...255.255.255.255	Set gateway of the ethernet port in the back of the device.
MAC-Address	00-00-00-00-00-00...FF-FF-FF-FF-FF-FF	Indication of MAC address of the device.
Storm Protection	• Disable • Enable	When enabled, the Storm protection functionality of the internal switch in the device is enabled. This functionality aims to protect the device from excess ethernet traffic caused by storm situation. When enabled, the packet rate allowed to pass through on the ingress port towards the device, is limited to 150 packets per second. Multicast packets are also included in the packet limit.
Double Ethernet card mode	• Switch • HSR • PRP	If the device has a double ethernet option card it is possible to choose its mode.
COM A and Ethernet option card connection	• Block all • Allow both directions • Allow COM A to option card • Allow option card to COM A	If the device has ethernet option card it is possible to determine the allowed direction of data.
Double Ethernet link events	• Disable • Enable	Disables or enables "Double Ethernet Link A down" and "Double Ethernet Link B down" logic signals and events.
Double Ethernet PRP ports	• AB • BA	LanA and LanB port assigment for communication cards that support PRP.

Table. 6.1 - 408. Ethernet security settings.

Name	Description
Enable back Ethernet port	Enable/Disable back panel Ethernet port communication.
Enable front Ethernet port	Enable/Disable front panel Ethernet port communication.

Name	Description
Enable SSH from front Ethernet port	Enable/Disable front panel Ethernet port SSH.
Enable FTP	Enable/Disable FTP server.
Enable discovery messages	Enable/Disable discovery messages. Discovery messages enable *Tools → Device list* menu in AQtivate setting tool to find all of the devices in the network.
Enable script running	Enable/Disable running scripts with *Tools → Run script* in AQtivate setting tool.
Enable HMI view buttons	Enable/Disable HMI button presses in the "HMI View" (*Tools → Misc → HMI View* in AQtivate).

Virtual Ethernet enables the device to be connected to multiple different networks simultaneously via one physical Ethernet connection. Virtual Ethernet has its own separate IP address and network configurations. All Ethernet-based protocol servers listen for client connections on the IP addresses of both the physical Ethernet and the Virtual Ethernet.

Table. 6.1 - 409. Virtual Ethernet settings.

Name	Description
Enable virtual adapter (No / Yes)	Enable virtual adapter. Off by default.
IP address	Set IP address of the virtual adapter.
Netmask	Set netmask of the virtual adapter.
Gateway	Set gateway of the virtual adapter.

Table. 6.1 - 410. Ethernet Option Card settings.

Name	Range	Default	Description
Ethernet card type	• None • SFP • RJ45	Ready only	Indicates the ethernet card type.
Card mode	• COM A IP • Single virtual IP • Dual virtual IP	COM A IP	
Rate limit	• No limit • 12.5Mb/1Mb • 30Mb/2Mb	No limit	Set the rate limit of communication.
Clock synchronization mode	• IRIG-B • PTP	IRIG-B	Clock synchronization mode selection. See "Time synchronization" chapter for more information.
Card status	• Port1 link ok • Port2 link ok	Read only	Shows if the connection in the two ports are healthy or not.
Port 1 dropped packet count	0…4294967295	Read only	Counts the number of dropped packets in port 1

© Arcteq Relays Ltd
IM00021

Name	Range	Default	Description
Port 2 dropped packet count	0…4294967295	Read only	Counts the number of dropped packets in port 2
Enable port 1	• No • Yes	No	Port enable/disable.
Port 1 SFP module status	• Module present • Module supported • Module problem	Read only	Shows the port 1 SFP module status (if applicable).
Port1 virtual Ethernet adapter IP address	0.0.0.0...255.255.255.255	10.15.1.0	Set the IP address of the virtual Ethernet adapter.
Port1 virtual Ethernet adapter netmask	0.0.0.0...255.255.255.255	255.255.255.0	Set the netmask of the virtual Ethernet adapter.
Port1 virtual Ethernet adapter gateway	0.0.0.0...255.255.255.255	10.15.1.254	Set the gateway of the virtual Ethernet adapter.
Port1 virtual Ethernet adapter MAC address	00-00-00-00-00-00...FF-FF-FF-FF-FF-FF	Read only	Indication of MAC address of the virtual Ethernet adapter.
Port 1 allowed protocols	• IEC61850 • GOOSE • ModbusTCP • IEC104 • DNP TCP • FTP • OPC UA • NTP • LPM communication • Settingtool communication • PTP	None	This parameter is used for selecting the protocols port 1 is allowed to use.
Port 1 link status events	• Enable • Disable	Enable	If this parameter is enabled, port 1 link status events are recorded to the device event history.
Port 2 SFP module status	• Error • OK	Read only	Shows the port 2 SFP module status (if applicable).
Port 2 link status events	• Enable • Disable	Enable	If this parameter is enabled, port 2 link status events are recorded to the device event history.

The device is equipped with an RS-485 serial port. In the software it is identified as "Serial COM1" port.

Table. 6.1 - 411. Serial COM1 settings.

Name	Range	Description
Bitrate	• 9600bps • 19200bps • 38400bps	Bitrate used by RS-485 port.
Databits	7...8	Databits used by RS-485 port.
Parity	• None • Even • Odd	Paritybits used by RS-485 port.
Stopbits	1...2	Stopbits used by RS-485 port.
Protocol	• None • ModbutRTU • ModbusIO • IEC103 • SPA • DNP3 • IEC101	Communication protocol used by RS-485 port.

The device supports communication option card type that has serial fiber ports (Serial COM2) an RS-232 port (Serial COM3).

Table. 6.1 - 412. Serial COM2 settings.

Name	Range	Description
Bitrate	• 9600bps • 19200bps • 38400bps	Bitrate used by serial fiber channels.
Databits	7...8	Databits used by serial fiber channels.
Parity	• None • Even • Odd	Paritybits used by serial fiber channels.
Stopbits	1...2	Stopbits used by serial fiber channels.
Protocol	• None • ModbutRTU • ModbusIO • IEC103 • SPA • DNP3 • IEC101	Communication protocol used by serial fiber channels.
Echo	• Off • On	Enable or disable echo.
Idle Light	• Off • On	Idle light behaviour.

© Arcteq Relays Ltd
IM00021

Table. 6.1 - 413. Serial COM3 settings.

Name	Range	Description
Bitrate	• 9600bps • 19200bps • 38400bps	Bitrate used by RS-232 port.
Databits	7...8	Databits used by RS-232 port.
Parity	• None • Even • Odd	Paritybits used by RS-232 port.
Stopbits	1...2	Stopbits used by RS-232 port.
Protocol	• None • ModbutRTU • ModbusIO • IEC103 • SPA • DNP3 • IEC101	Communication protocol used by RS-232 port.

6.2 Time synchronization

Time synchronization source can be selected with "Time synchronization" parameter at *Communication → Synchronization → General*.

Table. 6.2 - 414. General time synchronization source settings.

Name	Range	Description
Time synchronization source	• Internal • External NTP • External serial • IRIG-B • PTP	Selection of time synchronization source.

6.2.1 Internal

If no external time synchronization source is available the mode should be set to "internal". This means that the device clock runs completely on its own. Time can be set to the device with AQtivate setting tool with *Commands → Sync Time* command or in the clock view from the HMI. When using *Sync time* command AQtivate sets the time to device the connected computer is currently using. Please note that the clock doesn't run when the device is powered off.

6.2.2 NTP

When enabled, the NTP (Network Time Protocol) service can use external time sources to synchronize the device's system time. The NTP client service uses an Ethernet connection to connect to the NTP time server. NTP can be enabled by setting the primary time server and the secondary time server parameters to the address of the system's NTP time source(s).

Table. 6.2.2 - 415. Server settings.

Name	Range	Description
Primary time server address	0.0.0.0...255.255.255.255	Defines the address of the primary NTP server. Setting this parameter at "0.0.0.0" means that the server is not in use.
Secondary time server address	0.0.0.0...255.255.255.255	Defines the address of the secondary (or backup) NTP server. Setting this parameter at "0.0.0.0" means that the server is not in use.
NTP version	3...4	Defines the NTP version used.
NTP timesync events	• Enable • Disable	Enables "NTP Sync time acquired" event recording.

Table. 6.2.2 - 416. Status.

Name	Range	Description
NTP quality for events	• No sync • Synchronized	Displays the status of the NTP time synchronization at the moment. **NOTE:** This indication is not valid if another time synchronization method is used (external serial).
NTP-processed message count	0...4294967295	Displays the number of messages processed by the NTP protocol.

Additionally, the time zone of the device can be set by connecting to the device and the selecting the time zone at *Commands → Set time zone* in AQtivate setting tool.

6.2.3 PTP

The device supports IEEE 1588v2 precision time protocol synchronization in accordance with the PTP profiles defined in IEEE C37.238-2011/2017 and IEC 61850-9-3 (2016). The device can be configured to operate as a master, as a slave or in an automatic mode where the role is selected dynamically.

In typical operation the device functions as an ordinary clock and is configured either in slave mode or in auto mode. In both cases the device synchronizes to an external Grandmaster and does not normally act as a time source when a higher-priority clock is available. This is common in networks where a GPS-synchronized Grandmaster is present.

When operating in auto mode the device participates in the Best Master Clock Algorithm (BMCA) continuously comparing its clock quality with other PTP devices in the network. Based on this evaluation it automatically assumes the appropriate role—either master or slave.

When the device is explicitly configured in master mode it behaves as a pre-master if a GPS-synchronized Grandmaster is present. In this condition it advertises its clock properties but does not take over the Grandmaster role unless the higher-priority clock becomes unavailable.

To ensure redundancy at least one device often a protection relay is typically assigned a higher priority or explicitly set to master to act as a backup Grandmaster. If the GPS-synchronized master becomes unavailable this device takes over seamlessly and continuous time distribution.

© Arcteq Relays Ltd
IM00021

If the device becomes a Grandmaster either because it is explicitly configured as master or because BMCA selects it in auto mode it provides the reference time for other devices. In this state the device is not synchronized to GPS and the time source relies solely on its internal oscillator. This ensures continued synchronization within the network even when the GPS-based master is lost although the absolute accuracy depends on the internal clock stability.

Settings

Select PTP as the time synchronization source from *Communication → Synchronization → General* menu.

The following settings are available in *Communication → Synchronization → PTP* menu.

Table. 6.2.3 - 417. PTP time synchronization settings.

Name	Range	Description
Power profile	• None • IEEE C37-238-2011 • IEC61850-9-3 • IEEE C37-238-2017	Defines used power profile.
Role	• Auto (Default) • Master • Slave	In Auto mode, the device can take both the role of a clock source and clock consumer. In Master mode the device is forced to concider itself to be a clock source. In Slave mode the device is forced to be a clock consumer.
Mechanism	• P2P (Default) • E2E	Delay measurement mechanism used. Peer-to-peer can utilize the PTP enabled switches as transparent ro boundary clocks while End-to-end must be used if non-PTP enabled switches are found in the network.
Domain number	0...255	PTP devices can be set to belong to a grouping called domain. Devices in same domain is primearly being synchronized together.
Log announce interval		Mean time interval between successive announce messages.
Log delayReq interval		The minimum permitted mean time interval between successive Delay_Req messages
Log sync interval		Mean time interval between successive sync messages
Sync receipt timeout		Number of sync intervals that must pass without receipt of an sync message before the occurrence of the event SYNC_RECEIPT_TIMEOUT_EXPIRES
Announce receipt timeout		Number of announce intervals that must pass without receipt of an announce message before the occurrence of the event ANNOUNCE_RECEIPT_TIMEOUT_EXPIRES
Clock class		The traceability, synchronization state and expected performance of the time or frequency distributed by the Grandmaster PTP Instance
Clock accuracy		The expected accuracy of a PTP Instance when it is the Grandmaster PTP Instance, or in the event it becomes the Grandmaster PTP Instance

Name	Range	Description
Priority 1		Priority setting used in the execution of the best master clock algorithm. Lower values take precedence
Priority 2		Priority setting used in the execution of the best master clock algorithm. Lower values take precedence
VLAN enable	• Disabled • Enabled	Enable VLAN header for PTP communication
VLAN priority	0...7	Priority setting for VLAN
VLAN ID	0...4095	VLAN identification setting
Reconfigure PTP	• - • Reconfigure	Parameter to trig reconfiguration of the PTP application

Status indications

The following status indications are available in *Communication → Synchronization → PTP* menu.

Table. 6.2.3 - 418. PTP status indications

Name	Description
State	State of the PTP application (Master, Slave, Listening).
Best master	Identification of best master in network. Id consist of MAC address plus id number.
Last receive	Time when last synchronization frame was received.
Message sent	Diagnostic message counter.
Message receive	Diagnostic message counter.
PTP timesource	Diagnostic number describing the current time source.

6.3 Communication protocols

The following chapters will describe all available communication protocols. The device includes an RJ-45 ethernet port and an RS-485 serial port, which are able to use communication protocols. See other options for communication ports under "Construction and installation".

6.3.1 IEC 61850

The user can enable the IEC 61850 protocol in device models that support this protocol at *Communication → Protocols → IEC61850*. The device supports both Edition 1 and 2 of IEC 61850. The following services are supported by the device:

- Up to eight (8) data sets
- Report Control Blocks (both buffered and unbuffered reporting)
- Control ('Direct operate with normal security', 'Select before operate with normal security, 'Direct with enhanced security' and 'Select before operate with enhanced sequrity' control sequences)
- Disturbance recording file transfer

© Arcteq Relays Ltd
IM00021

- GOOSE
- Time synchronization

The device's current IEC 61850 setup can be viewed and edited with the IEC61850 tool (*Tools → Communication → IEC 61850*).

Settings

The general setting parameters for the IEC 61850 protocol are visible both in AQtivate and in the local HMI. The settings are described in the table below.

Table. 6.3.1 - 419. General settings.

Name	Range	Step	Default	Description
Enable IEC 61850	• Disabled • Enabled	-	Disabled	Enables and disables the IEC 61850 communication protocol.
Reconfigure IEC 61850	• - • Reconfigure	-	-	Reconfigures IEC 61850 settings.
IEC61850 edition	• Ed1 • Ed2	-	-	Displays the IEC61850 edition used by the device. Edition can be chosen by loading a new CID file at *Tools → Communication → IEC 61850* with *Open* button.
Control Authority switch	• Remote Control • Station Level Control	-	Remote Control	The device can be set to allow object control via IEC 61850 only from clients that are of category Station level control. This would mean that other Remote control clients would not be allowed to control. In Remote control mode all IEC 61850 clients of both remote and station level category are allowed to control objects.
Ethernet port	• All • COM A • Double ethernet card	-	All	Determines which ports use IEC61850. Parameter is visible if double ethernet option card is found in the device.
Configure GOOSE Subscriber from CID file allowed	• Disabled • Allowed	-	Disabled	In edition 2 of IEC 61850 GOOSE subscriber configuration is a part of the CID file. Determines if it is possible to import published GOOSE settings of another device with a CID file and set them to GOOSE input at *Tools → Communication → IEC 61850 → GOOSE subscriptions*.
General deadband	0.1…10.0 %	0.1 %	2 %	General reporting deadband.
Active energy deadband	0.1…1000.0 kWh	0.1 kWh	2 kWh	Reporting deadband for active energy related measurements.
Reactive energy deadband	0.1…1000.0 kVar	0.1 kVar	2 kVar	Reporting deadband for reactive energy related measurements.
Active power deadband	0.1…1000.0 kW	0.1 kW	2 kW	Reporting deadband for active power related measurements.

Name	Range	Step	Default	Description
Reactive power deadband	0.1…1000.0 kVar	0.1 kVar	2 kVar	Reporting deadband for reactive power related measurements.
Apparent power deadband	0.1…1000.0 kVA	0.1 kVA	2 kVA	Reporting deadband for apparent power related measurements.
Power factor deadband	0.01…0.99	0.01	0.05	Reporting deadband for power factor related measurements.
Frequency deadband	0.01…1.00 Hz	0.01 Hz	0.1 Hz	Reporting deadband for frequency related measurements.
Current deadband	0.01…50.00 A	0.01 A	5 A	Reporting deadband for current related measurements.
Residual current deadband	0.01…50.00 A	0.01 A	0.2 A	Reporting deadband for residual current related measurements.
Voltage deadband	0.01…5000.00 V	0.01 V	200 V	Reporting deadband for voltage related measurements.
Residual voltage deadband	0.01…5000.00 V	0.01 V	200 V	Reporting deadband for residual voltage measurement.
Angle measurement deadband	0.1…5.0 deg	0.1 deg	1 deg	Reporting deadband for angle related measurements.
mA deadband	0.01…5.00 mA	0.01 mA	0.10 mA	Reporting deadband for mA related measurements.
Integration time	0…10 000 ms	1 ms	0 ms	Determines the integration time of the protocol. If this parameter is set to "0 ms", no integration time is in use. See chapter "Integration time" for more information.
GOOSE Ethernet port	• All • COM A • Double ethernet card	-	All	Determines which ports can use GOOSE communication. Visible if double ethernet option card is found in the device.

For more information on the IEC 61850 communication protocol support, please refer to the conformance statement documents (https://www.arcteq.com/documents-and-software/ → AQ 200 series → Resources).

Deadband settings

Deadband settings define the minimum change in a measured value required before a new report is generated. They are used to reduce communication load and filter out insignificant measurement variations.

The measurement deadband settings have been split into categories like this:

© Arcteq Relays Ltd
IM00021

- General deadband
  - Analog scaling curves
  - THD measurements (current and voltage)
  - Fault impedance and distance (distance protection function)
  - Fault location and reactance (fault locator function)
  - RTD measurements
  - Object abbrasion calculations
  - Synchronizer and synchrocheck angle, frequency and angle values
  - Automatic voltage regulator function voltage values
- Power factor deadband
  - Single-phase and three-phase power factors
  - Single-phase and three-phase cos phi values
- Active energy deadband
  - Single-phase and three-phase exported energy
  - Single-phase and three-phase imported energy
  - Single-phase and three-phase energy balance (Import/Export)
- Reactive energy deadband
  - Single-phase and three-phase exported energy
  - Single-phase and three-phase imported energy
  - Single-phase and three-phase energy balance (Import/Export)
- Reactive power deadband
  - Single-phase and three-phase reactive energy
  - Reactive energy demand
- Active power deadband
  - Single-phase and three-phase active energy
  - Active energy demand
- Residual current deadband
  - Residual current measurements (primary)
- Residual voltage deadband
  - Residual voltage measurements (primary)
- Voltage deadband
  - Phase-to-phase voltage (primary)
  - Phase-to-neutral voltages (primary)
  - U4 channel voltage
- mA deadband
  - mA input card measurement values
- Angle measurement deadband
  - Phase current angles
  - Phase-to-phase and phase-to-neutral voltage angles
  - Neutral voltage angle
  - Angle of the latest fault impedances (distance protection)
- Current deadband
  - Phase currents (primary)
  - Phase reactive and resistive current (primary and secondary)
  - Residual current resistive and reactive current (primary and secondary)
- Frequency deadband
  - All three frequency references
  - Synchronizer frequency references
  - Phase current demand

6.3.1.1 Logical device mode and logical node mode

Every protection block has its own behavior (LNBeh). This behavior is determined using a combination of the protection block's mode (LNMod) and the device's mode (LDMod).

In IEC68150 mode,

- LNMod can be reported and controlled through Mod data object in all logical nodes.
- LNBeh can be reported through Beh data object in all logical nodes.
- LDMod is only visible through logical node zero's Mod data object (LLN0.Mod).

Mode and behavior values

There are 5 values defined for mode and behavior: On, Blocked, Test, Test / Blocked and Off.

Table. 6.3.1.1 - 420. Behavior descriptions.

LNBeh	On	Blocked	Test	Test / Blocked	Off
Function working	Yes	Yes	Yes	Yes	No
Data quality	Relevant to data	Relevant to data	q.test = True	q.test = True	q.validity = Invalid
Output to process	Yes	No	Yes	No	No
Accept normal control	Yes	Yes	No	No	No
Accept test control	No	No	Yes	Yes	No

The communication services for the **data object Mod** do not care about the status of the LNBeh. Mod will always accept commands with **q.test** = **False**.

Data objects Mod, Beh and Health will always have **q.validity** = **Good**. Regardless of the status of LNBeh, the quality test attribute of Mod, Beh and Health shall be **q.test** = **False**.

Behavior determination

The values for LDMod and LNMod are settable by the user by using HMI, setting tool, or IEC 61850 client. The value for LNBeh are then determined using following rules.

- If either LDMod or LNMod is Off, LNBeh is Off.
- Otherwise,
    - If either LDMod or LNMod is set to either "Test" or "Test / Blocked" mode, LNBeh is in Test mode.
    - If either LDMod or LNMod is set to either "Blocked" or "Test / Blocked" mode, LNBeh is in Blocked mode.
    - If LNBeh still doesn't have anything, LNBeh is "On".

All the possible combinations are laid out in the following table.

Table. 6.3.1.1 - 421. All possible logical device and logical node combinations.

LDMod	LNMod	LNBeh
Off	Off	Off

© Arcteq Relays Ltd
IM00021

LDMod	LNMod	LNBeh
	Test / Blocked	Off
	Test	Off
	Blocked	Off
	On	Off
Test / Blocked	Off	Off
	Test / Blocked	Test / Blocked
	Test	Test / Blocked
	Blocked	Test / Blocked
	On	Test / Blocked
Test	Off	Off
	Test / Blocked	Test / Blocked
	Test	Test
	Blocked	Test / Blocked
	On	Test
Blocked	Off	Off
	Test / Blocked	Test / Blocked
	Test	Test / Blocked
	Blocked	Blocked
	On	Blocked
On	Off	Off
	Test / Blocked	Test / Blocked
	Test	Test
	Blocked	Blocked
	On	On

Processing of incoming data in different behaviors

This part only applies to incoming data with quality information.

The table below gives the functional processing of the data in different behavior states as defined by the standard. Logical nodes should process receiving data according to their quality information:

- Processed as valid - Reacts according to the quality.
- Processed as invalid - Reacts as if the quality of the data had been invalid.
- Processed as questionable - The application decides how to consider the status value.
- Not processed - Do not belong to communication services, no quality bit can be evaluated.

Table. 6.3.1.1 - 422. Processing of incoming data in different behaviors as defined by the standard.

	On	Blocked	Test	Test / Blocked	Off
q.validity = Good q.test = False	Processed as valid	Processed as valid	Processed as valid	Processed as valid	Not processed
q.validity = Questionable q.test = False	Processed as questionable	Processed as questionable	Processed as questionable	Processed as questionable	Not processed
q.validity = Good q.test = True	Processed as invalid	Processed as invalid	Processed as valid	Processed as valid	Not processed
q.validity = Questionable q.test = True	Processed as invalid	Processed as invalid	Processed as questionable	Processed as questionable	Not processed
q.validity = Invalid q.test = True/ False	Processed as invalid	Processed as invalid	Processed as invalid	Processed as invalid	Not processed

Arcteq's implementation treats “Processed as questionable” and “Processed as invalid” in the same way with “Not processed”. Only "Processed as valid" is passed to the application.

Table. 6.3.1.1 - 423. Arcteq's implementation of processing of incoming data in different behaviors.

	On	Blocked	Test	Test / Blocked	Off
q.validity = Good q.test = False	Processed as valid	Processed as valid	Processed as valid	Processed as valid	
q.validity = Questionable q.test = False					
q.validity = Good q.test = True			Processed as valid	Processed as valid	
q.validity = Questionable q.test = True					
q.validity = Invalid q.test = True/False					

Using mode and behavior

Enabling LDMod and LNMod changing can be done at *General → Device info*.

© Arcteq Relays Ltd
IM00021

Table. 6.3.1.1 - 424. Parameters to allow changing of LNMod and LDMod.

Name	Range	Default	Description
Allow setting of device mode	• Prohibited • From HMI/ setting tool only • Allowed	Prohibited	Allows global mode to be modified from setting tool, HMI and IEC61850. Prohibited: Cannot be changed. From HMI/setting tool only: Can only be changed from the setting tool or HMI. Allowed: Can be changed from the setting tool, HMI, and IEC 61850 client.
Allow setting of individual LN mode	• Prohibited • From HMI/ setting tool only • Allowed	Prohibited	Allow local modes to be modified from setting tool, HMI and IEC61850. This parameter is visible only when "Allow setting of device mode" is enabled. Prohibited: Cannot be changed. From HMI/setting tool only: Can only be changed from the setting tool or HMI Allowed: Can be changed from the setting tool, HMI, and IEC 61850 client.

When enabled it is possible to change LDMod at *Communication → Protocols → IEC61850*.

Table. 6.3.1.1 - 425. Parameter for changing logical device mode.

Name	Range	Default	Description
Allow setting of device mode	• On • Blocked • Test • Test/ Blocked • Off	On	Set mode of logical device. This parameter is visible only when *Allow setting of device mode* is enabled in *General* menu.

Each protection, control and monitoring function has its own logical node mode which can be changed individually. This parameter is found in the functions *Info*-menu. Each function also reports its behavior. Behavior of the function is influenced by the status of the device mode setting and the functions mode setting.

Table. 6.3.1.1 - 426. LNMod parameters.

Name	Range	Default	
LN mode	• On • Blocked • Test • Test/ Blocked • Off	On	Set mode of function logical node. This parameter is visible only when *Allow setting of individual LN mode* is enabled in *General* menu.
LN behavior	• On • Blocked • Test • Test/ Blocked • Off	On	Displays the mode of the function logical node. This parameter is visible only when *Allow setting of individual LN mode* is enabled in *General* menu.

6.3.1.2 GOOSE

Arcteq devices support both GOOSE publisher and GOOSE subscriber. GOOSE subscriber is enabled with the "GOOSE subscriber enable" parameter at *Communication → Protocols → IEC 61850/GOOSE*. The GOOSE inputs are configured using either the local HMI or the AQtivate software.

There are up to 64 GOOSE inputs available for use. Each of the GOOSE inputs also has a corresponding input quality signal which can also be used in internal logic. The quality is good, when the input quality status is "low" (that is, when the quality is marked as "0"). The value of the input quality can switch on as a result of a GOOSE time-out or a configuration error, for example. The status and quality of the various logical input signals can be viewed at the *GOOSE IN status* and *GOOSE IN quality* tabs at *Control → Device I/O → Logical signals*.

General GOOSE setting

The table below presents general settings for GOOSE publisher.

Table. 6.3.1.2 - 427. General GOOSE publisher settings.

Name	Range	Description
GOOSE control block 1 simulation bit	• Disabled (Default) • Enabled	The publisher will publish frames with simulation bit active if enabled. For GOOSE simulation testing purposes.
GOOSE control block 2 simulation bit		

The table below presents general settings for GOOSE subscriber

Table. 6.3.1.2 - 428. General GOOSE subscriber settings.

Name	Range	Description
GOOSE subscriber enable	• Disabled (Default) • Enabled	Enables or disables GOOSE subscribing for the device.
Not used GOOSE input Quality	• Bad quality (1) • Good quality (0)	Defines what state should GOOSE input quality signal to be in the logic if the input has been set as "disabled".
Subscriber checks GoCBRef	• No (Default) • Yes	When subscriber sees GOOSE frame it checks APPID and Conf. Rev but can also check if GoCBRef or SqNum match.
Subscriber checks SqNum		

© Arcteq Relays Ltd
IM00021

Name	Range	Description
Subscriber process simulation messages	• No (Default) • Yes	Subscriber can be set to process frames which are published with simulation bit high if enabled. The subscriber can still subscribe to non-simulated frames from a publisher until that a simulated frame is received from a publisher. From that point on, only simulated frames are accepted from that publisher. For other publishers, non-simulated frames are accepted normally (given no simulated frame is received from that publisher). This behavior ends when the setting is set back to No.

GOOSE input settings

The table below presents the different settings available for all 64 GOOSE inputs.

These settings can be found from *Communication → Protocols → IEC61850/GOOSE → GOOSE Input Settings*.

Table. 6.3.1.2 - 429. GOOSE input settings.

Name	Range	Description
In use	• No (Default) • Yes	Enables and disables the GOOSE input in question.
Application ID ("AppID")	0×0…0×3FFF	Defines the application ID that will be matched with the publisher's GOOSE control block.
Configuration revision ("ConfRev")	$1…2^{32}-1$	Defines the configuration revision that will be matched with the publisher's GOOSE control block.
Data index ("DataIdx")	0…99	Defines the data index of the value in the matched published frame. It is the status of the GOOSE input.
NextIdx is quality	• No (Default) • Yes	Selects whether or not the next received input is the quality bit of the GOOSE input.
Data type	• Boolean (Default) • Integer • Unsigned • Floating point	Selects the data type of the GOOSE input.
Control block reference	-	GOOSE subscriber can be set to check the GCB reference of the published GOOSE frame. This setting is automatically filled when Ed2 GOOSE configuration is done by importing cid file of the publisher.

GOOSE input descriptions

Each of the GOOSE inputs can be given a description. The user defined description are displayed in most of the menus:

- logic editor
- matrix

- block settings
- event history
- disturbance recordings
- etc.

These settings can be found from *Control → Device IO → Logical Signals → GOOSE IN Description*.

Table. 6.3.1.2 - 430. GOOSE input user description.

Name	Range	Default	Description
User editable description GI x	1...31 characters	GOOSE IN x	Description of the GOOSE input. This description is used in several menu types for easier identification.

GOOSE input values

Each of the GOOSE subscriber inputs (1...64) have indications listed in the following table. These indications can be found from *Communication → Protocols → IEC61850/GOOSE → GOOSE input values*.

Table. 6.3.1.2 - 431. GOOSE input indications

Name	Range	Description
Subscription status	• Not Active • Active	When active correct data received and passed to application.
Processing simulation message	• False • True	When true subscriber is processing simulation frames for this input (and rejecting non-simulated frames).
Needs commissioning	• False • True	When true configuration doesn't match the received frame (goCBRef, confRev).
Last received state number	0...4294967295	Status number (stNum) of the last data passed to application.
GOOSE IN X boolean value	0...1	GOOSE input 1...64 boolean value.
GOOSE IN X analog value	-3.4E+38...3.4E+38	GOOSE input 1...64 analog value.
GOOSE IN X quality	• Old data • Failure • Oscillatory • Bad reference • Out of range • Overflow • Invalid • Reserved/ Questionable • Operator blocked • Test • Substituted • Inaccurate • Inconsistent	GOOSE input quality indication.

© Arcteq Relays Ltd
IM00021

Name	Range	Description
GOOSE IN X time	DD/MM/YYYY HH:MM:SS	Time when publisher sent GOOSE frame.
GOOSE IN X time fraction	0...4294967295 µs	Microseconds of the publisher GOOSE frame.

GOOSE events

GOOSE signals generate events from status changes. The user can select which event messages are stored in the main event buffer: ON, OFF, or both. The events triggered by the function are recorded with a time stamp and with process data values. The time stamp resolution is 1 ms.

Table. 6.3.1.2 - 432. GOOSE event

Event block name	Event name	Description
GOOSE1...GOOSE2	GOOSE IN 1...64 ON/OFF	Status change of GOOSE input.
GOOSE3...GOOSE4	GOOSE IN 1...64 quality Bad/ Good	Status change of GOOSE inputs quality.
GOOSE5...GOOSE6	GOOSE Subscription status 1...64 Active/Not active	When active correct data received and passed to application.
GOOSE7...GOOSE8	GOOSE Processing simulated messages 1...64 True/False	When true subscriber is processing simulation frames for this input (and rejecting non-simulated frames).
GOOSE9...GOOSE10	GOOSE Subscription needs commissioning 1...64 True/ False	When true configuration doesn't match the received frame (goCBRef, confRev).

Setting the publisher

The configuration of the GOOSE publisher is done using the IEC 61850 tool in AQtivate (*Tools → Communication → IEC 61850*). Refer to *AQtivate-200 Instruction manual* for more information on how to set up GOOSE publisher.

6.3.2 Modbus TCP and Modbus RTU

The device supports both Modbus TCP and Modbus RTU communication. Modbus TCP uses the Ethernet connection to communicate with Modbus TCP clients. Modbus RTU is a serial protocol that can be selected for the available serial ports.

The user can enable the Modbus TCP protocol at *Communication → Protocols → Modbus TCP*. The user can enable the Modbus RTU protocol at *Communication → Connections*.

The following Modbus function types are supported:

- Read multiple holding registers (function code 3)
- Write single holding register (function code 6)
- Write multiple holding registers (function code 16)
- Read/Write multiple registers (function code 23)

The following data can be accessed using both Modbus TCP and Modbus RTU:

- Device measurements

- Device I/O
- Commands
- Events
- Time

Once the configuration file has been loaded, the user can access the Modbus map of the device via the AQtivate software (*Tools → Communication → Modbus Map*). Please note that holding registers start from 1. Some masters might begin numbering holding register from 0 instead of 1; this will cause an offset of 1 between the device and the master. Modbus map can be edited with Modbus Configurator (*Tools → Communication → Modbus Configurator*).

Table. 6.3.2 - 433. Modbus TCP settings.

Parameter	Range	Description
Enable Modbus TCP	• Disabled • Enabled	Enables and disables the Modbus TCP on the Ethernet port.
IP port	0…65 535	Defines the IP port used by Modbus TCP. The standard port (and the default setting) is 502.
Ethernet port	• All • COM A • Double Ethernet card	Defines which ethernet ports are available for Modbus connection. Visible if any double ethernet option card is installed in the device.
Event read mode	• Get oldest available • Continue previous connection • New events only	Get oldest event possible (Default) Continue with the event idx from previous connection Get only new events from connection time and forward.

Table. 6.3.2 - 434. Modbus RTU settings.

Parameter	Range	Description
Slave address	1…247	Defines the Modbus RTU slave address for the unit.

Reading events

Modbus protocol does not support time-stamped events by standard definition. This means that every vendor must come up with their own definition how to transfer events from the device to the client. Events can be read from HR17...HR22 holding registers. HR17 contains the event-code, HR18...20 contains the time-stamp in UTC, HR21 contains a sequential index and HR22 is reserved for future expansion. See the Modbus Map for more information. The event-codes and their meaning can be found from Event list (*Tools → Events ang Logs → Event list* in setting tool). The event-code in HR17 is 0 if no new events can be found in the device event-buffer. Every time HR17 is read from client the event in event-buffer is consumed and on following read operation the next un-read event information can be found from event registers. HR11…HR16 registers contains a back-up of last read event. This is because some users want to double-check that no events were lost

© Arcteq Relays Ltd
IM00021

6.3.3 IEC 103

IEC 103 is the shortened form of the international standard IEC 60870-5-103. The device is able to run as a secondary (slave) station. The IEC 103 protocol can be selected for the serial ports that are available in the device. A primary (master) station can then communicate with the device and receive information by polling from the slave device. The transfer of disturbance recordings is not supported.

The user can enable the IEC 103 protocol at *Communication → Connections*.

NOTE: Once the configuration file has been loaded, the IEC 103 map of the device can be found in the AQtivate software (*Tools → IEC 103 map*).

Table. 6.3.3 - 435. IEC 103 settings.

Name	Range	Step	Default	Description
Slave address	1…254	1	1	Defines the IEC 103 slave address for the unit.
Measurement interval	0…60 000 ms	1 ms	2000 ms	Defines the interval for the measurements update.

The following table presents the setting parameters for the IEC 103 protocol.

6.3.4 IEC 101/104

The standards IEC 60870-5-101 and IEC 60870-5-104 are closely related. Both are derived from the IEC 60870-5 standard. On the physical layer the IEC 101 protocol uses serial communication whereas the IEC 104 protocol uses Ethernet communication. The IEC 101/104 implementation works as a slave in the unbalanced mode.

For detailed information please refer to the IEC 101/104 interoperability document (https://www.arcteq.com/documents-and-software/ → AQ-200 series → Resources → "AQ-200 IEC101 & IEC104 interoperability").

The user can enable the IEC104 protocol at *Communication → Protocols → IEC101/104*. The user can enable the IEC101 protocol at *Communication → Connections*.

IEC 101 settings

Table. 6.3.4 - 436. IEC 101 settings.

Name	Range	Step	Default	Description
Common address of ASDU	0…65 534	1	1	Defines the common address of the application service data unit (ASDU) for the IEC 101 communication protocol.
Common address of ASDU size	1…2	1	2	Defines the size of the common address of ASDU.
Link layer address	0…65 534	1	1	Defines the address for the link layer.
Link layer address size	1…2	1	2	Defines the address size of the link layer.

Name	Range	Step	Default	Description
Information object address size	2…3	1	3	Defines the address size of the information object.
Cause of transmission size	1…2	1	2	Defines the cause of transmission size.

IEC101/104 measurement scaling coefficients

Table. 6.3.4 - 437. Measurement scaling coefficient settings.

Name	Range	Default	Description
General scaling coef.	• No scaling • 1/10 • 1/100 • 1/1000 • 1/10000 • 1/100000 • 1/1000000 • 10 • 100 • 1000 • 10000 • 100000 • 1000000	No scaling	Optional scaling factor for IEC101/IEC104 communication. Values from 1/10 to 1/1,000,000 apply a division to the measurement. Values from 10 to 1,000,000 apply a multiplication to the measuremen
Active energy scaling coef.			
Reactive energy scaling coef.			
Active power scaling coef.			
Reactive power scaling coef.			
Apparent power scaling coef.			
Power factor scaling coef.			
Frequency scaling coef.			
Current scaling coef.			
Residual current scaling coef.			
Voltage scaling coef.			
Residual voltage scaling coef.			
Angle measurement scaling coef.			
mA scaling coef.			

IEC101/104 deadband settings

Table. 6.3.4 - 438. Analog change deadband settings.

Name	Range	Step	Default	Description
General deadband	0.1…10.0%	0.1%	2%	Determines the general data reporting deadband settings.

© Arcteq Relays Ltd
IM00021

Name	Range	Step	Default	Description
Active energy deadband	0.1…1000.0kWh	0.1kWh	2kWh	Determines the data reporting deadband settings for this measurement.
Reactive energy deadband	0.1…1000.0kVar	0.1kVar	2kVar	
Active power deadband	0.1…1000.0kW	0.1kW	2kW	
Reactive power deadband	0.1…1000.0kVar	0.1kVar	2kVar	
Apparent power deadband	0.1…1000.0kVA	0.1kVA	2kVA	
Power factor deadband	0.01…0.99	0.01	0.05	
Frequency deadband	0.01…1.00Hz	0.01Hz	0.1Hz	
Current deadband	0.01…50.00A	0.01A	5A	
Residual current deadband	0.01…50.00A	0.01A	0.2A	
Voltage deadband	0.01…5000.00V	0.01V	200V	
Residual voltage deadband	0.01…5000.00V	0.01V	200V	
Angle measurement deadband	0.1…5.0deg	0.1deg	1deg	
mA measurement deadband	0.01…5.00 mA	0.01 mA	0.10 mA	
Integration time	0…10 000ms	1ms	-	Determines the integration time of the protocol. If this parameter is set to "0 ms", no integration time is in use. See chapter "Integration time" for more information.

Deadband settings

Deadband settings define the minimum change in a measured value required before a new report is generated. They are used to reduce communication load and filter out insignificant measurement variations.

The measurement deadband settings have been split into categories like this:

- General deadband
  - Analog scaling curves
  - Fault impedance and distance (distance protection function)
  - Fault location and reactance (fault locator function)
  - RTD measurements
  - Automatic voltage regulator function voltage values
- Power factor deadband
  - Single-phase and three-phase power factors
  - Single-phase and three-phase cos phi values
- Active energy deadband
  - Single-phase and three-phase exported energy
  - Single-phase and three-phase imported energy
- Reactive energy deadband
  - Single-phase and three-phase exported energy
  - Single-phase and three-phase imported energy
- Reactive power deadband
  - Single-phase and three-phase reactive energy
  - Reactive energy demand
- Active power deadband
  - Single-phase and three-phase active energy
  - Active energy demand
- Residual current deadband
  - Residual current measurements (primary)
- Residual voltage deadband
  - Residual voltage measurements (primary)
- Voltage deadband
  - Phase-to-phase voltage (primary)
  - Phase-to-neutral voltages (primary)
  - U4 channel voltage (primary)
- mA deadband
  - mA input card measurement values
- Angle measurement deadband
  - Phase current angles
  - Phase-to-phase and phase-to-neutral voltage angles
  - Neutral voltage angle
- Current deadband
  - Phase currents (primary)
  - Current demand measurements
- Frequency deadband
  - Frequency reference used by the device

6.3.5 SPA

The device can act as a SPA slave. SPA can be selected as the communication protocol for the RS-485 port (Serial COM1). When the device has a serial option card, the SPA protocol can also be selected as the communication protocol for the serial fiber (Serial COM2) ports or RS-232 (Serial COM3) port. Please refer to the chapter "Construction and installation" in the device manual to see the connections for these modules.

© Arcteq Relays Ltd
IM00021

The data transfer rate of SPA is 9600 bps, but it can also be set to 19 200 bps or 38 400 bps. As a slave the device sends data on demand or by sequenced polling. The available data can be measurements, circuit breaker states, function starts, function trips, etc. The full SPA signal map can be found in AQtivate (*Tools → SPA map*).

The SPA event addresses can be found at *Tools → Events and logs → Event list*.

The user can enable the SPA protocol at *Communication → Connections*.

Table. 6.3.5 - 439. SPA setting parameters.

Name	Range	Description
SPA address	1...899	SPA slave address.
UTC time sync	• Disabled • Enabled	Determines if UTC time is used when synchronizing time. When disabled it is assumed time synchronization uses local time. If enabled it is assumed that UTC time is used. When UTC time is used the timezone must be set at *Commands → Set time zone*.

NOTICE!
To access SPA map and event list, an .aqs configuration file should be downloaded from the device.

6.3.6 DNP3

DNP3 is a protocol standard which is controlled by the DNP Users Group (www.dnp.org). The implementation of a DNP3 slave is compliant with the DNP3 subset (level) 2, but it also contains some functionalities of the higher levels. For detailed information please refer to the DNP3 Device Profile document (https://www.arcteq.com/documents-and-software/ → AQ-200 series → Resources).

The user can enable the DNP3 TCP protocol at *Communication → Protocols → DNP3*. The user can enable the DNP3 serial protocol at *Communication → Connections*.

General settings

The following table describes the DNP3 setting parameters.

Table. 6.3.6 - 440. Settings.

Name	Range	Step	Default	Description
Enable DNP3 TCP	• Disabled • Enabled	-	Disabled	Enables and disables the DNP3 TCP communication protocol when the Ethernet port is used for DNP3. If a serial port is used, the DNP3 protocol can be enabled from *Communication → DNP3*.
IP port	0…65 535	1	20 000	Defines the IP port used by the protocol.
Ethernet port	• All • COM A • Double Ethernet card	-	All	Defines which ethernet ports are available for Modbus connection. Visible if any double ethernet option card is installed in the device.

Name	Range	Step	Default	Description
Slave address	1…65 519	1	1	Defines the DNP3 slave address of the unit.
Master address	1…65 534	1	2	Defines the address for the allowed master.
Link layer time-out	0…60 000ms	1ms	0ms	Defines the length of the time-out for the link layer.
Link layer retries	1…20	1	1	Defines the number of retries for the link layer.
Diagnostic - Error counter	$0…2^{32}$-1	1	-	Counts the total number of errors in received and sent messages.
Diagnostic - Transmitted messages	$0…2^{32}$-1	1	-	Counts the total number of transmitted messages.
Diagnostic - Received messages	$0…2^{32}$-1	1	-	Counts the total number of received messages.

Default variations

Table. 6.3.6 - 441. Default variations.

Name	Range	Default	Description
Group 1 variation (BI)	• Var 1 • Var 2	Var 1	Selects the variation of the binary signal.
Group 2 variation (BI change)	• Var 1 • Var 2	Var 2	Selects the variation of the binary signal change.
Group 3 variation (DBI)	• Var 1 • Var 2	Var 1	Selects the variation of the double point signal.
Group 4 variation (DBI change)	• Var 1 • Var 2	Var 2	Selects the variation of the double point signal.
Group 20 variation (CNTR)	• Var 1 • Var 2 • Var 5 • Var 6	Var 1	Selects the variation of the control signal.
Group 22 variation (CNTR change)	• Var 1 • Var 2 • Var 5 • Var 6	Var 5	Selects the variation of the control signal change.

© Arcteq Relays Ltd
IM00021

Name	Range	Default	Description
Group 30 variation (AI)	• Var 1 • Var 2 • Var 3 • Var 4 • Var 5	Var 5	Selects the variation of the analog signal.
Group 32 variation (AI change)	• Var 1 • Var 2 • Var 3 • Var 4 • Var 5 • Var 7	Var 5	Selects the variation of the analog signal change.

DNP3 measurement scaling coefficients

Table. 6.3.6 - 442. Measurement scaling coefficient settings.

Name	Range	Default	Description
General scaling coef.	• No scaling • 1/10 • 1/100 • 1/1000 • 1/10000 • 1/ 100000 • 1/ 1000000 • 10 • 100 • 1000 • 10000 • 100000 • 1000000	No scaling	Optional scaling factor for SPA communication. Values from 1/10 to 1/1,000,000 apply a division to the measurement. Values from 10 to 1,000,000 apply a multiplication to the measuremen
Active energy scaling coef.			
Reactive energy scaling coef.			
Active power scaling coef.			
Reactive power scaling coef.			
Apparent power scaling coef.			
Power factor scaling coef.			
Frequency scaling coef.			
Current scaling coef.			
Residual current scaling coef.			
Voltage scaling coef.			
Residual voltage scaling coef.			
Angle measurement scaling coef.			
mA scaling coef.			

DNP3 deadband settings

Table. 6.3.6 - 443. Analog change deadband settings.

Name	Range	Step	Default	Description
General deadband	0.1…10.0%	0.1%	2%	Determines the general data reporting deadband settings.
Active energy deadband	0.1…1000.0kWh	0.1kWh	2kWh	Determines the data reporting deadband settings for this measurement.
Reactive energy deadband	0.1…1000.0kVar	0.1kVar	2kVar	
Active power deadband	0.1…1000.0kW	0.1kW	2kW	
Reactive power deadband	0.1…1000.0kVar	0.1kVar	2kVar	
Apparent power deadband	0.1…1000.0kVA	0.1kVA	2kVA	
Power factor deadband	0.01…0.99	0.01	0.05	
Frequency deadband	0.01…1.00Hz	0.01Hz	0.1Hz	
Current deadband	0.01…50.00A	0.01A	5A	
Residual current deadband	0.01…50.00A	0.01A	0.2A	
Voltage deadband	0.01…5000.00V	0.01V	200V	
Residual voltage deadband	0.01…5000.00V	0.01V	200V	
Angle measurement deadband	0.1…5.0deg	0.1deg	1deg	
mA deadband	0.01…5.00 mA	0.01 mA	0.10 mA	
Integration time	0…10 000ms	1ms	0ms	Determines the integration time of the protocol. If this parameter is set to "0 ms", no integration time is in use. See chapter "Integration time" for more information.

© Arcteq Relays Ltd
IM00021

Deadband settings

Deadband settings define the minimum change in a measured value required before a new report is generated. They are used to reduce communication load and filter out insignificant measurement variations.

The measurement deadband settings have been split into categories like this:

- General deadband
  - Measurements not covered by other deadband categories
  - Fault impedance and distance (distance protection function)
  - Fault location and reactance (fault locator function)
  - RTD measurements
- Power factor deadband
  - Single-phase and three-phase power factors
  - Single-phase and three-phase cos phi values
- Active energy deadband
  - Single-phase and three-phase exported energy
  - Single-phase and three-phase imported energy
- Reactive energy deadband
  - Single-phase and three-phase exported energy
  - Single-phase and three-phase imported energy
- Reactive power deadband
  - Single-phase and three-phase reactive energy
  - Reactive energy demand
- Active power deadband
  - Single-phase and three-phase active energy
  - Active energy demand
- Residual current deadband
  - Residual current measurements (primary)
- Residual voltage deadband
  - Residual voltage measurement (primary)
- Voltage deadband
  - Phase-to-phase voltage (primary)
  - Phase-to-neutral voltages (primary)
  - U3 channel voltage (primary)
  - U4 channel voltage (primary)
- mA deadband
  - mA input card measurement values
- Angle measurement deadband
  - Phase current angles
  - Phase-to-phase and phase-to-neutral voltage angles
  - Neutral voltage angle
- Current deadband
  - Phase currents (primary)
  - Phase current demand
- Frequency deadband
  - Frequency reference used by the device.

6.3.7 Modbus I/O

The Modbus I/O protocol can be selected to communicate on the available serial ports. The Modbus I/O is actually a Modbus/RTU master implementation that is dedicated to communicating with serial Modbus/RTU slaves such as RTD input modules. Up to three (3) Modbus/RTU slaves can be connected to the same bus polled by the Modbus I/O implementation. These are named I/O Module A, I/O Module B and I/O Module C. Each of the modules can be configured using parameters in the following two tables.

Table. 6.3.7 - 444. Module settings.

Name	Range	Description
I/O module X address	0…247	Defines the Modbus unit address for the selected I/O Module (A, B, or C). If this setting is set to "0", the selected module is not in use.
Module x type	• ADAM-4018+ • ADAM-4015	Selects the module type.
Channels in use	Channel 0…Channel 7 (or None)	Selects the number of channels to be used by the module.

Table. 6.3.7 - 445. Channel settings.

Name	Range	Step	Default	Description
Thermocouple type	• +/- 20mA • 4…20mA • Type J • Type K • Type T • Type E • Type R • Type S	-	4…20mA	Selects the thermocouple or the mA input connected to the I/O module. Types J, K, T and E are nickel-alloy thermocouples, while Types R and S are platinum/rhodium-alloy thermocouples.
Input value	-101.0…2 000.0	0.1	-	Displays the input value of the selected channel.
Input status	• Invalid • OK	-	-	Displays the input status of the selected channel.

6.3.8 OPCUA

Table. 6.3.8 - 446. OPCUA settings.

Name	Range	Step	Default	Description
OPCUA mode	• Disabled • Enabled	-	Disabled	Enables or disables the OPCUA protocol.
OPCUA reconfigure	• - • Reconfigure	-	-	Reconfigures the OPCUA and takes the settings configured in *Tools → Communication → OPCUA* into use.

© Arcteq Relays Ltd
IM00021

Name	Range	Step	Default	Description
OPCUA Flat struct enable	• Disabled • Enabled	-	Disabled	

Flat structure option

By default, some data points are represented as nested structures.

For example, I3MMXU1.A.phsA.cVal is a structured value containing:

- mag
  - f (basic value)
  - i (basic value, typically not mapped)
- ang
  - f (basic value)
  - i (basic value, typically not mapped)

When **Flat Structure** is enabled, the server applies two changes:

1. Removes members that do not contain mapped data (for example, i).
2. Flattens nested structures into individual data points.

Using the previous example, instead of exposing cVal as a structured node, the server exposes the following data points directly under phsA:

- cVal.mag.f
- cVal.ang.f

Figure. 6.3.8 - 223. Nested structure (left) and flat structure (right) comparison.

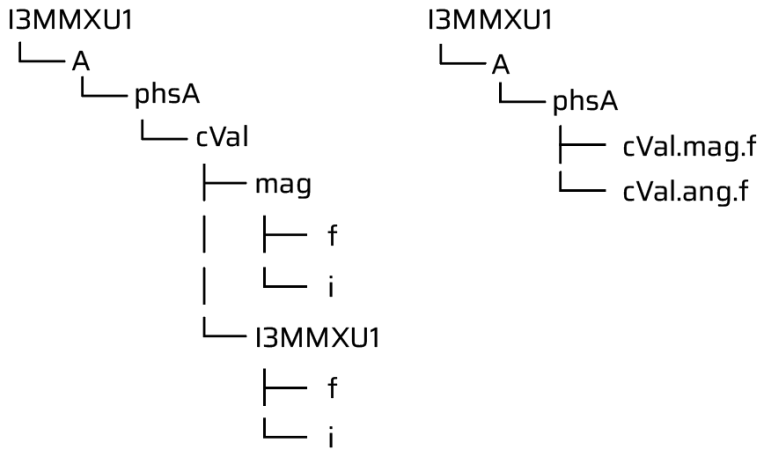

6.3.9 Integration time

When integration time is not used, measurement values are updated only when the change exceeds the configured deadband. If the deadband is set too low, measurements may be reported too frequently, creating unnecessary traffic. If the deadband is configured too high, the measurement may almost never update. When integration time is used, large changes are still reported quickly, but smaller changes are accumulated over time and eventually reported even if the deadband is not very sensitive.

With integration time enabled, the following parameters determine when a measurement is reported:

- deadband setting of the measurement
- integration time setting
- latest reported measurement value
- measured value.

An integrated value is calculated over time using these parameters. Once this integrated value exceeds the deadband, a new measurement update is sent.

Figure. 6.3.9 - 224. Integration time formula.

$$Integrated\ value = |Measured\ value - Latest\ reported\ value| * \left(\frac{t}{Integration\ time}\right)$$

Figure. 6.3.9 - 225. Example graph showing how integration time affects measurement reporting. Small changes take longer to increase the integrated value over the deadband setting (blue area). Big changes meet the deadband criteria faster (red area).

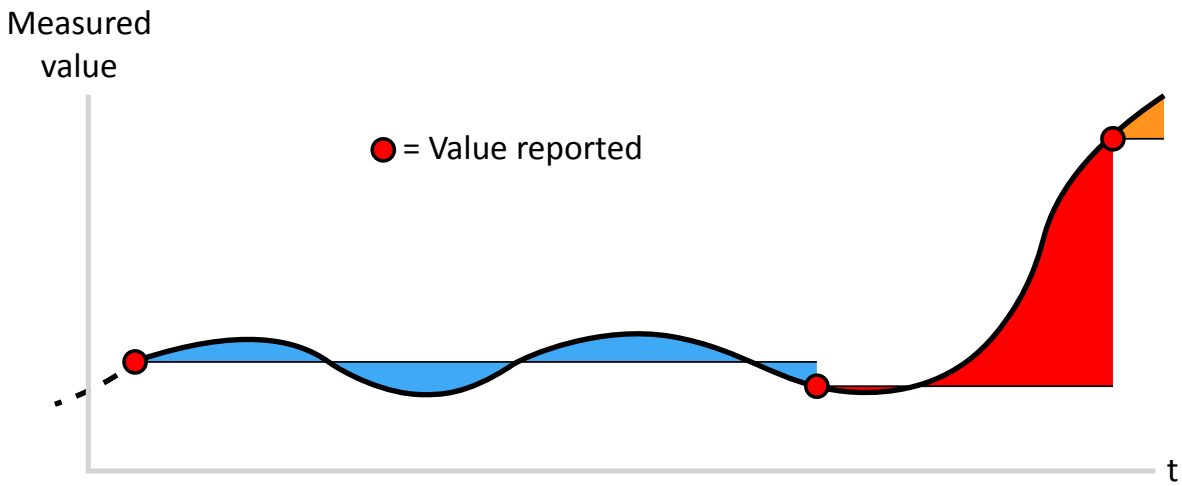

The time it takes for a value to be updated with the configured settings can be roughly estimated with the following formula:

Figure. 6.3.9 - 226. Measurement reporting delay when integration time is used.

$$t = \frac{Deadband\ setting * Integration\ time\ setting}{|Measured\ value - Latest\ reported\ value|}$$

If the latest reported value was 5.00 A and the measurement rises up to 6.00 A and stays stable, and the deadband setting for current is 2 A and the integration time setting is 1 s, we get the following result:

Figure. 6.3.9 - 227. Calculation example for estimating reporting time when integration time is in use.

$$t = \frac{2A * 1s}{|6A - 5A|} = 2s$$

© Arcteq Relays Ltd
IM00021

6.4 Analog fault registers

At *Communication → General I/O → Analog fault registers* the user can set up to twelve (12) channels to record the measured value when a protection function starts or trips. These values can be read in two ways: locally from this same menu, or through a communication protocol if one is in use.

The following table presents the setting parameters available for the 12 channels.

Table. 6.4 - 447. Fault register settings.

Name	Range	Step	Default	Description
Select record source	Not in use I>, I>>, I>>>, I>>>> (IL1, IL2, IL3) Id>, Id>>, Id>>>, Id>>>> (IL1, IL2, IL3) I0>, I0>>, I0>>>, I0>>>> (I0) I0d>, I0d>>, I0d>>>, I0d>>>> (I0) FLX (Fault locator)	-	Not in use	Selects the protection function and its stage to be used as the source for the fault register recording. The user can choose between non-directional overcurrent, directional overcurrent, non-directional earth fault, directional earth fault, and fault locator functions.
Select record trigger	• TRIP signal • START signal • START and TRIP signals	-	TRIP signal	Selects what triggers the fault register recording: the selected function's TRIP signal, its START signal, or either one.
Recorded fault value	- 1000 000.00…1 000 000.00	0.01	-	Displays the recorded measurement value at the time of the selected fault register trigger.

6.5 Modbus Gateway

Figure. 6.5 - 228. Example setup of Modbus Gateway application.

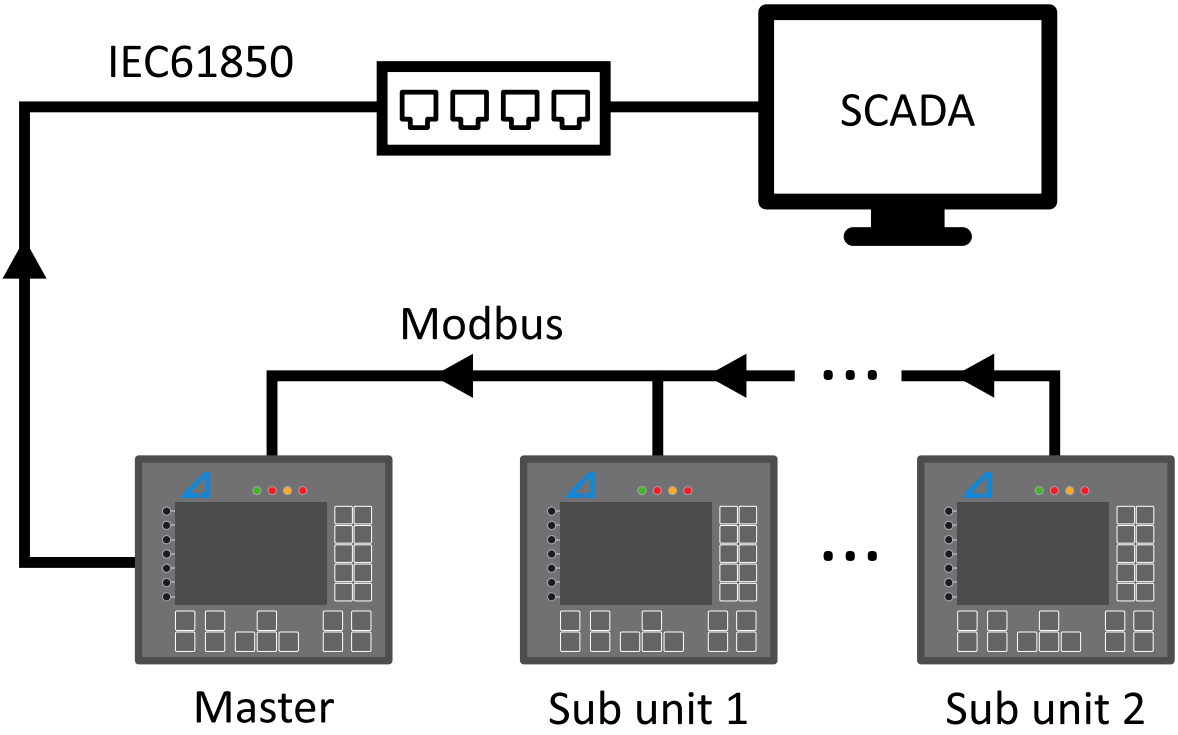

The device can be setup as a Modbus Gateway (i.e. master). Modbus Gateway device can import messages (measurements, status signals etc.) from external Arcteq and third-party devices. RS-485 serial communication port. Up to 32 sub units can be connected to a master unit. These messages can then be used for controlling logic in the master device, display the status in user created mimic. Binary signals can be reported forward to SCADA with IEC61850, IEC101, IEC103, IEC104, Modbus, DNP3 or SPA.

Modbus Gateway and its basic settings can be found from *Communication → Modbus Gateway*. General settings-menu displays the health of connection to each sub unit.

Table. 6.5 - 448. General settings

Name	Range	Description
Modbus Gateway mode	• Disabled (Default) • Enabled	Enables or disables Modbus Gateway.
Modbus Gateway reconfigure	- Reconfigure	Setting this parameter to "Reconfigure" takes new settings into use. Parameter returns back to "-" automatically.
Quality of Modbus Sub unit 1...32	• OK • Old data • Data questionable • Modbus error • Send fail • Receive fail	Quality of each connected sub unit.

© Arcteq Relays Ltd
IM00021

Imported signals

Modbus Gateway supports importing of measurements, bits, double bits, counters and integer signals. Up to 128 signals can be imported of each signal type with the exception of double bits (32).

Table. 6.5 - 449. Imported signals

Name	Range
Imported measurement 1-128	-3.4E+38...3.4E+38
Imported bit signal 1-128	0...1
Imported double bit data 1-32	0...3
Imported counter data 1-128	0...4294967295
Imported integer signal 1-128	-2147483648...2147483647

To assign the signals use Modbus Gateway editor (*Tools → Communication → Modbus Gateway*). Detailed description of this tool can be found in *AQtivate Instruction manual* (https://www.arcteq.com/documents-and-software/).

All imported signals can be given a description. The description will be displayed in most of menus with the signal (logic editor, matrix, block settings etc.).

Table. 6.5 - 450. Imported signal user description.

Name	Range	Default	Description
Describe measurement x	1...31 characters	Acq. Meas x	User settable description for the signal. This description is used in several menu types for easier identification.
Describe bit signal x		Acq. Bit x	
Describe doube bit signal x		Acq. Binary x	
Describe counter signal x		Acq. Counter x	
Describe integer signal x		Acq. Integer x	

Events

The Modbus Gateway generates events the status changes in imported bits and double bits. The user can select which event messages are stored in the main event buffer: ON, OFF, or both.

Table. 6.5 - 451. Event messages

Event block name	Event names
MGWB1	Bit 1...Bit 32 (ON, OFF)

Event block name	Event names
MGWB2	Bit 33...Bit 64 (ON, OFF)
MGWB3	Bit 65...Bit 96 (ON, OFF)
MGWB4	Bit 97...Bit 128 (ON, OFF)
MGWD1	Double Bit 1... Double bit 16 (ON/ON, OFF/OFF, ON/OFF, OFF/ON)
MGWD2	Double Bit 17... Double bit 32 (ON/ON, OFF/OFF, ON/OFF, OFF/ON)

6.6 Realtime signals to Comm

The Real-time signals to communication menu allows selected measurements to be reported to the SCADA system at a faster update rate. This feature is primarily intended for use with Fast Modbus.

Up to eight (8) measurement magnitudes can be selected for reporting. Each reported value can be transmitted either as a per-unit value or as a primary value, as configured by the user.

Settings

Table. 6.6 - 452. Settings.

Name	Range	Step	Default	Description
Measurement value recorder mode	• Disabled • Activated	-	Disabled	Activates and disables the real-time signals to communication.
Scale current values to primary	• No • Yes	-	No	Selects whether or not values are scaled to primary.
Slot X magnitude selection	• Currents • Voltages • Powers • Impedance (ZRX) and admittance (YGB) • Others	-	Currents	Selects the measured magnitude catecory of the chosen slot.
Slot X magnitude	Described in table above ("Available measured values")	-	-	Selects the magnituge in the previously selected category.
Magnitude X	-10 000 000.000…10 000 000.000	0.001	-	Displays the measured value of the selected magnitude of the selected slot. The unit depends on the selected magnitude (either amperes, volts, or per-unit values).

© Arcteq Relays Ltd
IM00021

7 Connections and application examples

7.1 Connections of AQ-M257

Figure. 7.1 - 229. AQ-M257A application example with function block diagram.

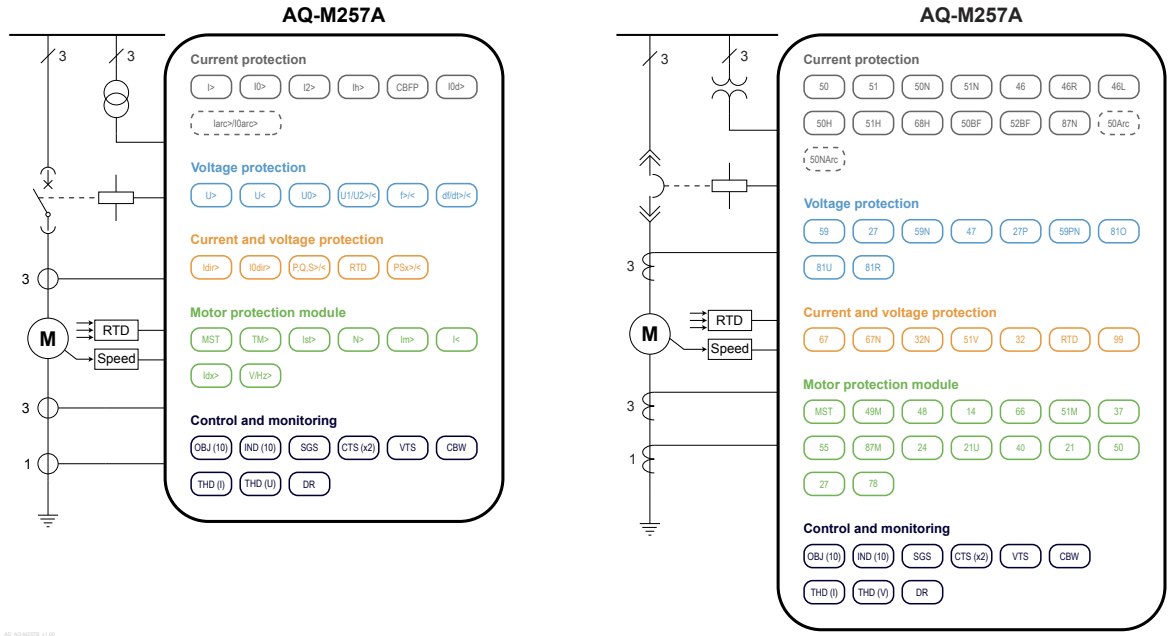

Figure. 7.1 - 230. AQ-M257B application example with function block diagram.

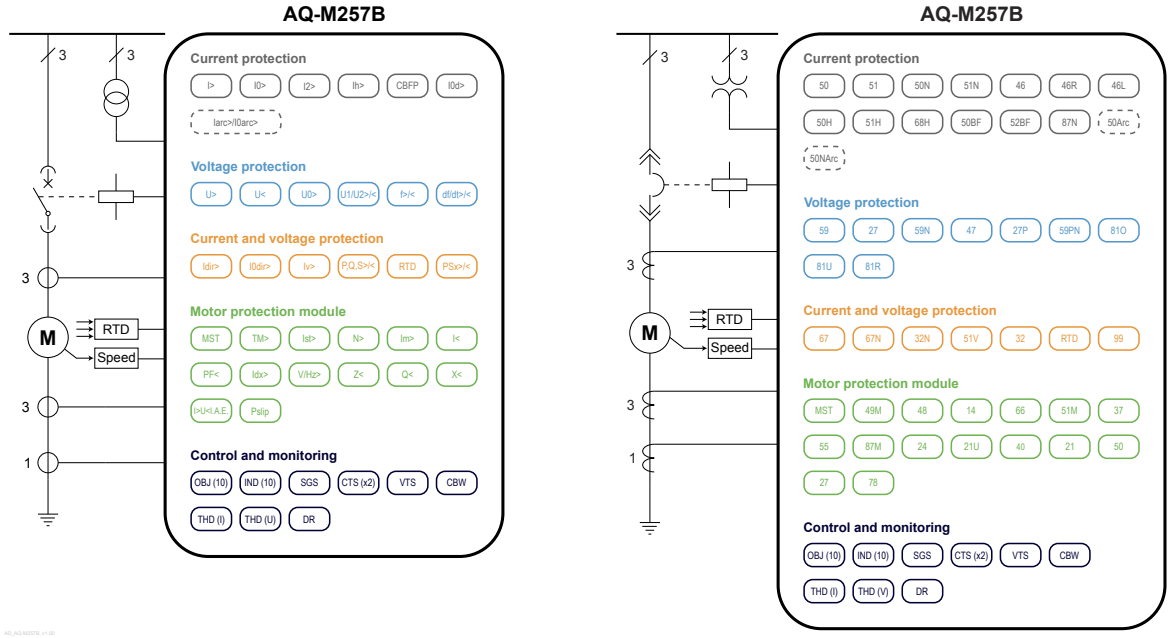

7.2 Application example and its connections

This chapter presents an application example for the motor protection device. The example is of motor differential protection.

Since three line-to-neutral voltages are connected, this application uses the voltage measurement mode "3LN" (see the image below). Additionally, there are two current transformers connected (three phase currents) on both sides of the motor.

Figure. 7.2 - 231. Application example and its connections.

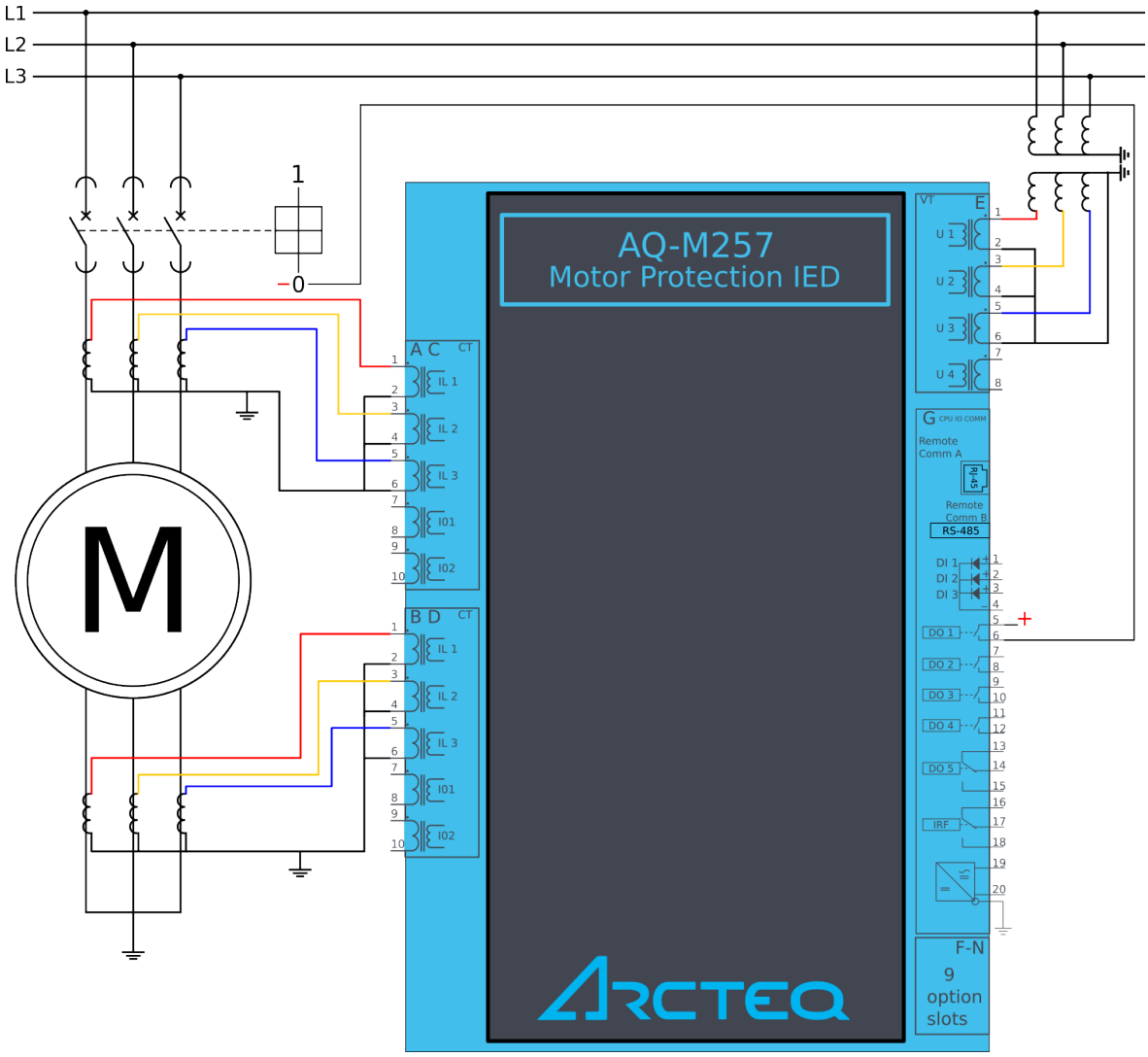

© Arcteq Relays Ltd
IM00021

8 Construction and installation

8.1 Construction

AQ-X257 is a member of the modular and scalable AQ-200 series, and it includes nine (9) configurable and modular add-on card slots. As a standard configuration the device includes the CPU module (which consists of the CPU, a number of inputs and outputs, and the power supply) as well as two separate current measurement modules and one separate voltage measurement module.

The images below present the modules of both the non-optioned model (AQ-X257-XXXXXXX-AAAAAAAAA) and the fully optioned model (AQ-X257-XXXXXXX-BBBCCCCCJ).

Figure. 8.1 - 232. Modular construction of AQ-X257-XXXXXXX-AAAAAAAAA

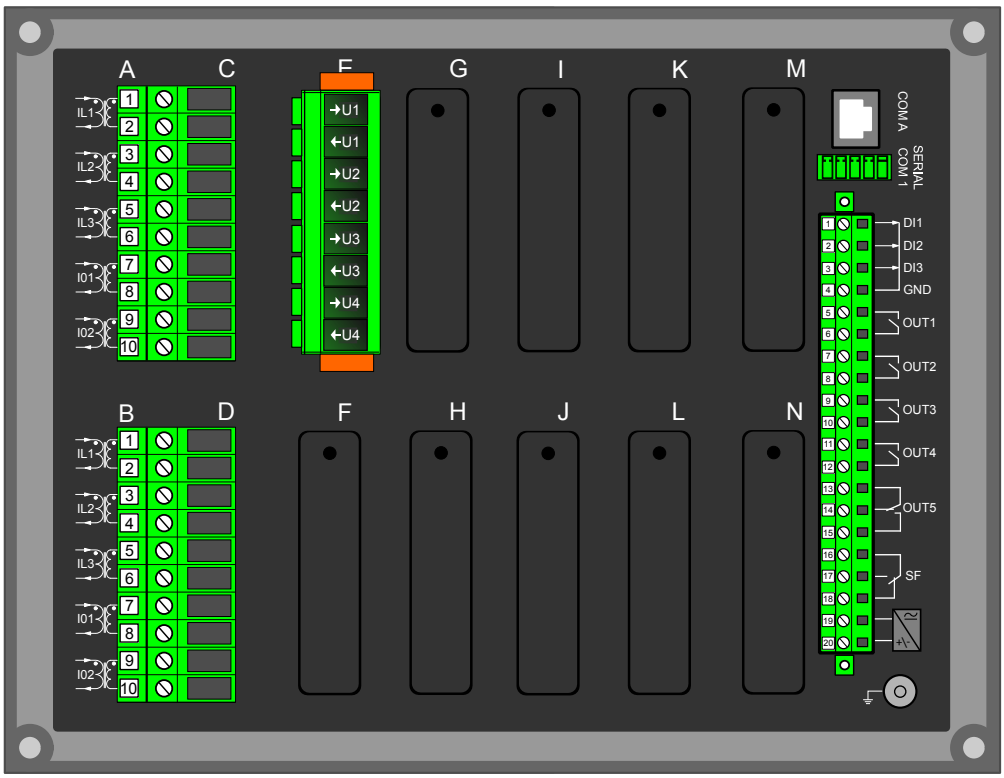

Figure. 8.1 - 233. Modular construction of AQ-X257-XXXXXXX-BBBCCCCCJ

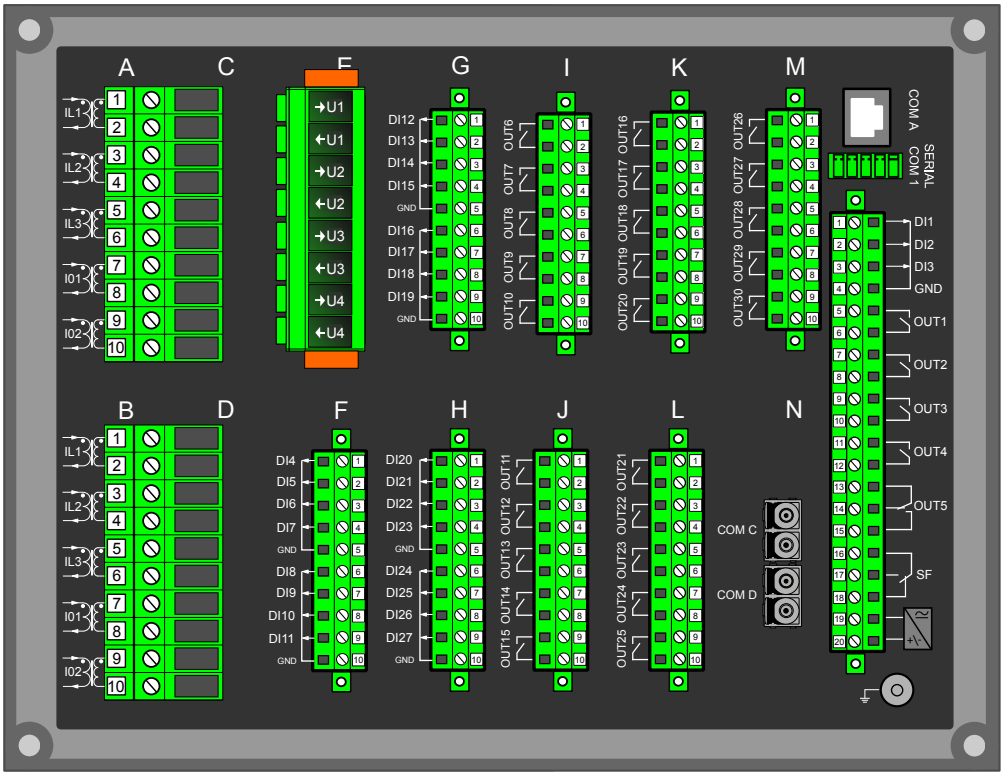

The modular structure of AQ-X257 allows for scalable solutions for different application requirements. In non-standard configurations Slots from F to N accept all available add-on modules, such as digital I/O modules, integrated arc protection and other special modules. The only difference between the slots affecting device scalability is that Slots M and N both also support communication options.

Start-up scan searches for modules according to their type designation code. If the module content is not what the device expects, the device issues a hardware configuration error message. In field upgrades, therefore, add-on modules must be ordered from Arcteq Relays Ltd. or its representative who can then provide the module with its corresponding unlocking code to allow the device to operate correctly once the hardware configuration has been upgraded.

When an I/O module is inserted into the device, the module location affects the naming of the I/O. The I/O scanning order in the start-up sequence is as follows: the CPU module I/O, Slot F, Slot G, Slot H and so on. This means that the digital input channels DI1, DI2 and DI3 as well as the digital output channels OUT1, OUT2, OUT3, OUT4 and OUT5 are always located in the CPU module. If additional I/O cards are installed, their location and card type affect the I/O naming.

The figure below presents the start-up hardware scan order of the device as well as the I/O naming principles.

© Arcteq Relays Ltd
IM00021

Figure. 8.1 - 234. AQ-X257 hardware scanning and I/O naming principles.

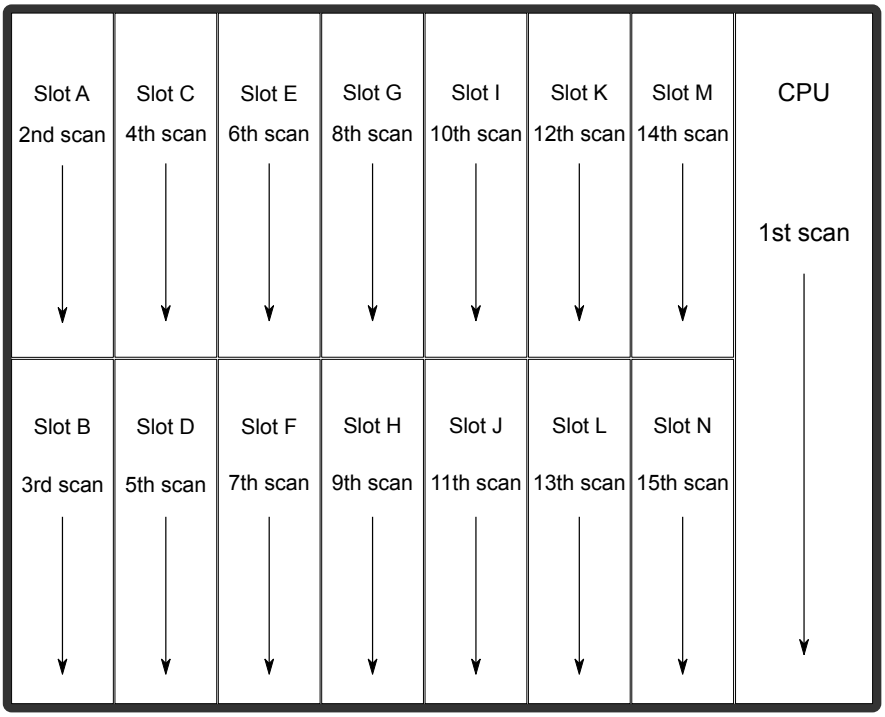

1. Scan
   The start-up system; detects and self-tests the CPU module, voltages, communication and the I/O; finds and assigns "DI1", "DI2", "DI3", "OUT1", "OUT2", "OUT3", "OUT4" and "OUT5".
2. Scan
   Scans Slot A, which should always remain empty in AQ-X257 devices. If it is not empty, the device issues an alarm.
3. Scan
   Scans Slot B, which should always remain empty in AQ-X257 devices. If it is not empty, the device issues an alarm.
4. Scan
   Scans Slot C and finds the five channels of the CT module (fixed for AQ-X257). If the CTM is not found, the device issues an alarm.
5. Scan
   Scans Slot D and finds the five channels of the CT module (fixed for AQ-X257). If the CTM is not found, the device issues an alarm.
6. Scan
   Scans Slot E and finds the four channels of the VT module (fixed for AQ-257). If the VTM is not found, the device issues an alarm.
7. Scan
   Scans Slot F, and moves to the next slot if Slot F is empty. If the scan finds an 8DI module (that is, a module with eight digital inputs), it reserves the designations "DI4", "DI5", "DI6", "DI7", "DI8", "DI9", "DI10" and "DI11" to this slot. If the scan finds a DO5 module (that is, a module with five digital outputs), it reserves the designations "OUT6", "OUT7", "OUT8", "OUT9" and "OUT10" to this slot. The I/O is then added if the type designation code (e.g. AQ-P215-PH0AAAA-BBC) matches with the existing modules in the device. If the code and the modules do not match, the device issues and alarm. An alarm is also issued if the device expects to find a module here but does not find one.

8. Scan
   Scans Slot G, and moves to the next slot if Slot G is empty. If the scan finds an 8DI module, it reserves the designations "DI4", "DI5", "DI6", "DI7", "DI8", "DI9", "DI10" and "DI11" to this slot. If Slot F also has an 8DI module (and therefore has already reserved these designations), the device reserves the designations "DI12", "DI13", "DI14", "DI15", "DI16", "DI17", "DI18" and "DI19" to this slot. If the scan finds a 5DO module, it reserves the designations "OUT6", "OUT7", "OUT8", "OUT9" and "OUT10" to this slot. Again, if Slot F also has a 5DO and has therefore already reserved these designations, the device reserves the designations "OUT11", "OUT12", "OUT13", "OUT14" and "OUT15" to this slot.
9. – 15. Scan
   A similar operation to Scan 8 (checks which designations have been reserved by modules in previous slots and numbers the new ones accordingly).

With AQ-X257-XXXXXXX-BBBCCCCCJ (the first image pair, on the right) has a total of 27 digital input channels available: three (DI1…DI3) in the CPU module, and the rest in Slots F…H in groups of eight. It also has a total of 30 digital output channels available: five (DO1…DO5) in the CPU module, and the rest in Slots I…M in groups of five. Slot N has a double (LC) fiber Ethernet communication option card installed.

8.2 CPU module

Figure. 8.2 - 235. CPU module can be equipped with standard screw terminals or spring cage terminals for connection.

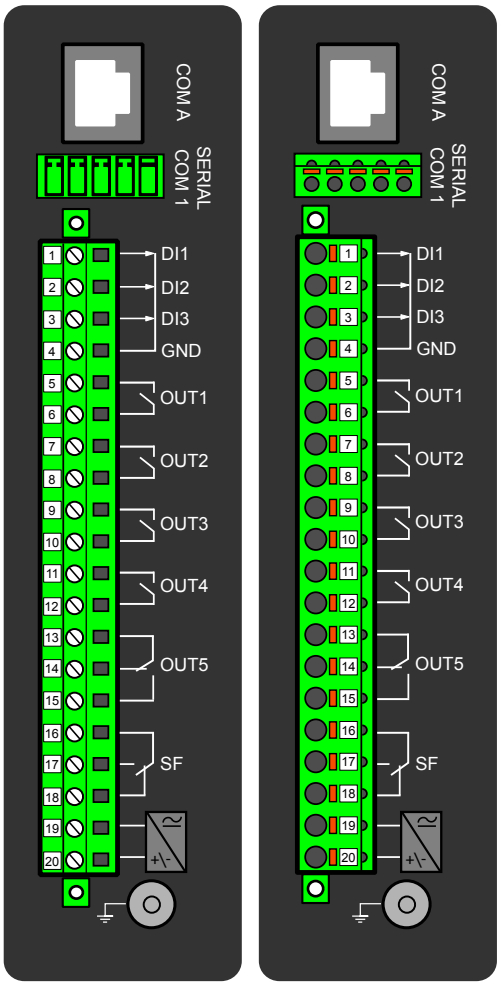

© Arcteq Relays Ltd
IM00021

Connector	Description
COM A	Communication port A, or the RJ-45 port. Used for the setting tool connection and for SCADA communication.
COM B	Communication port B, or the RS-485 port. Used for SCADA communication. The pins have the following designations: • Pin 1 = DATA + • Pin 2 = DATA – • Pin 3 = GND • Pins 4 & 5 = Terminator resistor enabled by shorting.
X1-1	Digital input 1, nominal threshold voltage 24 V, 110 V or 220 V.
X1-2	Digital input 2, nominal threshold voltage 24 V, 110 V or 220 V.
X1-3	Digital input 3, nominal threshold voltage 24 V, 110 V or 220 V.
X1-4	Common GND for digital inputs 1, 2 and 3.
X1-5:6	Output relay 1, with a normally open (NO) contact.
X1-7:8	Output relay 2, with a normally open (NO) contact.
X1-9:10	Output relay 3, with a normally open (NO) contact.
X1-11:12	Output relay 4, with a normally open (NO) contact.
X1-13:14:15	Signaling relay 5, with a changeover contact. Not to be used in trip coil control.
X1-16:17:18	System fault's signaling relay, with a changeover contact. Pins 16 and 17 are closed when the unit has a system fault or is powered OFF. Pins 16 and 18 are closed when the unit is powered ON and there is no system fault.
X1-19:20	Power supply IN. Either 88…265 VAC/DC (model A; order code "H") or 18…72 DC (model B; order code "L"). Positive side (+) to Pin 20.
GND	The device's earthing connector.

By default, the CPU module (combining the CPU, the I/O and the power supply) includes two standard communication ports and the device's basic digital I/O.

The digital output controls can be set by the user with software. Digital outputs are controlled in 5 ms program cycles. All output contacts are mechanical. The rated voltage of the NO/NC outputs is 250 VAC/DC.

Digital inputs

The current consumption of the digital inputs is 2 mA when activated. The range of the operating voltage is 24 V/110 V/220 V depending on the ordered hardware. All digital inputs are scannced in 5 ms program cycles.

The settings described in the table below can be found at *Control → Device I/O → Digital input settings* in the device settings.

Table. 8.2 - 453. Digital input settings.

Name	Range	Step	Default	Description
DIx Polarity	• NO (Normally open) • NC (Normally closed)	-	NO	Selects whether the status of the digital input is 1 or 0 when the input is energized.
DIx Activation delay	0.000…1800.000 s	0.001 s	0.000 s	Defines the delay for the status change from 0 to 1.
DIx Drop-off time	0.000…1800.000 s	0.001 s	0.000 s	Defines the delay for the status change from 1 to 0.
DIx AC mode	• Disabled • Enabled	-	Disabled	Selects whether or not a 30-ms deactivation delay is added to account for alternating current.

Digital outputs

The digital output controls can be set by the user with software. Digital outputs are controlled in 5 ms program cycles. All output contacts are mechanical. The rated voltage of the NO/NC outputs is 250 VAC/DC.

Table. 8.2 - 454. Digital output settings.

Name	Range	Description
Out x Polarity	• NO • NC	Determines the normal status of the output relay. Digital outputs are configured as “normally open” relays by default. Each output can be changed to “normally closed” using the "OUTx Polarity" parameter. Please note that this change is implemented in software only. If the device is powered off, the outputs will revert to an open state and return to the configured polarity once power is restored. If a truly “normally closed” contact is required, use the changeover relay OUT5 available in the CPU module of the device. An NC output signal does not open during a Communication or Protection reset.

Digital input and output descriptions

CPU card digital inputs and outputs can be given a description. The user defined description are displayed in most of the menus:

- logic editor
- matrix
- block settings
- event history
- disturbance recordings
- etc.

© Arcteq Relays Ltd

Table. 8.2 - 455. Digital input and output user description.

Name	Range	Default	Description
User editable description DIx	1...31 characters	DIx	Description of the digital input. This description is used in several menu types for easier identification.
User editable description OUTx		OUTx	Description of the digital output. This description is used in several menu types for easier identification.

NOTICE!
After editing user descriptions the event history will start to use the new description only after resetting the HMI. HMI can be reset from *General → Device info → HMI restart*.

Scanning cycle

All digital inputs are scanned in a 5 ms cycle, meaning that the state of an input is updated every 0…5 milliseconds. When an input is used internally in the device (either in setting group change or logic), it takes additional 0…5 milliseconds to operate. Theoretically, therefore, it takes 0…10 milliseconds to change the setting group when a digital input is used for group control or a similar function. In practice, however, the delay is between 2…8 milliseconds about 95 % of the time. When a digital input is connected directly to a digital output (OUT1…OUTx), it takes an additional 5 ms round. Therefore, when a digital input controls a digital output internally, it takes 0…15 milliseconds in theory and 2…13 milliseconds in practice.

NOTICE!
The mechanical delay of the relay is not included in these approximations!

8.3 Current measurement module

Figure. 8.3 - 236. Module connections with standard and ring lug terminals.

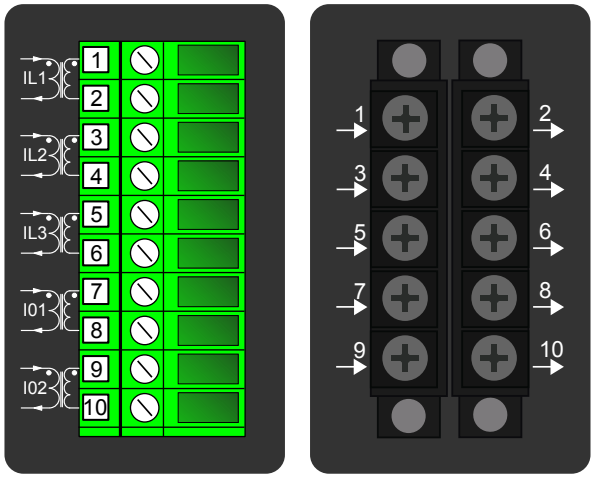

Connector	Description
CTM 1-2	Phase current measurement for phase L1 (A).
CTM 3-4	Phase current measurement for phase L2 (B).
CTM 5-6	Phase current measurement for phase L3 (C).

Connector	Description
CTM 7-8	Coarse residual current measurement I01.
CTM 9-10	Fine residual current measurement I02.

A basic current measurement module with five channels includes three-phase current measurement inputs as well as coarse and fine residual current inputs. The CT module is available with either standard or ring lug connectors.

The current measurement module is connected to the secondary side of conventional current transformers (CTs). The nominal current for the phase current inputs is 5 A. The input nominal current can be scaled for secondary currents of 1…10 A. The secondary currents are calibrated to nominal currents of 1 A and 5 A, which provide ±0.5 % inaccuracy when the range is 0.005…4 × I_n.

The measurement ranges are as follows:

- Phase currents 25 mA…250 A (RMS)
- Coarse residual current 5 mA…150 A (RMS)
- Fine residual current 1 mA…75 A (RMS)

The characteristics of phase current inputs are as follows:

- The angle measurement inaccuracy is less than ± 0.2 degrees with nominal current.
- The frequency measurement range of the phase current inputs is 6…1800 Hz with standard hardware.
- The sample rate of the signal is 64 samples/cycle when the system frequency ranges from 6 Hz to 75 Hz.

For further details please refer to the "Current measurement" chapter in the “Technical data” section of this document.

8.4 Voltage measurement module

Figure. 8.4 - 237. Voltage measurement module can be equipped with standard screw terminals or spring cage terminals for connection.

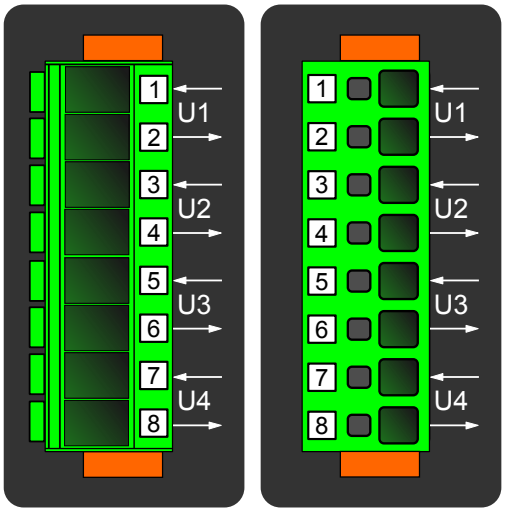

Connector	Description
VTM 1-2	Configurable voltage measurement input U1.

© Arcteq Relays Ltd

Connector	Description
VTM 3-4	Configurable voltage measurement input U2.
VTM 5-6	Configurable voltage measurement input U3.
VTM 7-8	Configurable voltage measurement input U4.

A basic voltage measurement module with four channels includes four voltage measurement inputs that can be configured freely.

The voltage measurement module is connected to the secondary side of conventional voltage transformers (VTs) or directly to low-voltage systems secured by fuses. The nominal voltage can be set between 100…400 V. Voltages are calibrated in a range of 0…240 V, which provides ± 0.2 % inaccuracy in the same range.

The voltage input characteristics are as follows:

- The measurement range is 0.5…480.0 V per channel.
- The angle measurement inaccuracy is less than ± 0.5 degrees within the nominal range.
- The frequency measurement range of the voltage inputs is 6…1800 Hz with standard hardware.
- The sample rate of the signal is 64 samples/cycle when the system frequency ranges from 6 Hz to 75 Hz.

For further details please refer to the "Voltage measurement" chapter in the “Technical data” section of this document.

8.5 Option cards

8.5.1 Digital input module (optional)

Figure. 8.5.1 - 238. Digital input module (DI8) with eight add-on digital inputs. Can be equipped with standard screw terminals or spring cage terminals for connection.

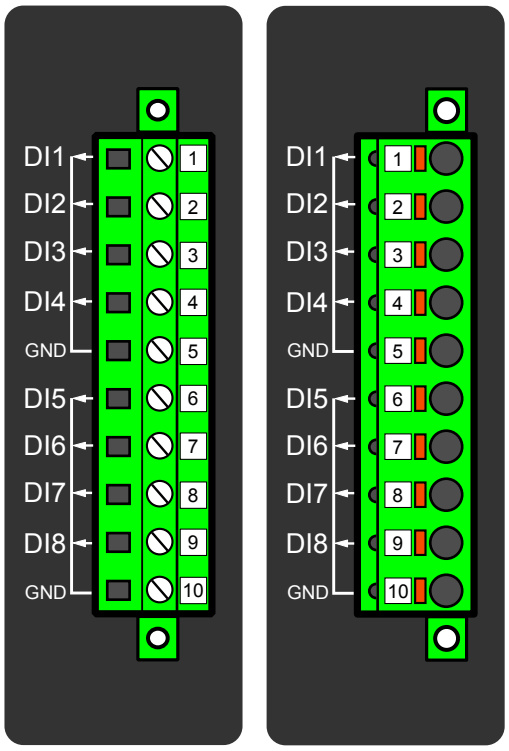

Connector	Description (x = the number of digital inputs in other modules that preceed this one in the configuration)
X 1	DIx + 1
X 2	DIx + 2
X 3	DIx + 3
X 4	DIx + 4
X 5	Common earthing for the first four digital inputs.
X 6	DIx + 5
X 7	DIx + 6
X 8	DIx + 7
X 9	DIx + 8
X 10	Common earthing for the other four digital inputs.

The DI8 module is an add-on module with eight (8) galvanically isolated digital inputs. This module can be ordered directly to be installed into the device in the factory, or it can be upgraded in the field after the device's original installation when required. The properties of the inputs in this module are the same as those of the inputs in the main processor module. The current consumption of the digital inputs is 2 mA when activated, while the range of the operating voltage is from 0…265 VAC/DC. The activation and release thresholds are set in the software and the resolution is 1 V. All digital inputs are scannced in 5 ms program cycles, and their pick-up and release delays as well as their NO/NC selection can be set with software.

For the naming convention of the digital inputs provided by this module please refer to the chapter titled "Construction and installation".

For technical details please refer to the chapter titled "Digital input module" in the "Technical data" section of this document.

The hardware configuration code of this module is "B". For more information, please refer to the "Ordering information" chapter of this document.

Setting up the activation and release delays

The settings described in the table below can be found at *Control → Device I/O → Digital input settings* in the device settings.

Table. 8.5.1 - 456. Digital input settings of DI8 module.

Name	Range	Step	Default	Description
DIx Polarity	• NO (Normally open) • NC (Normally closed)	-	NO	Selects whether the status of the digital input is 1 or 0 when the input is energized.

© Arcteq Relays Ltd
IM00021

Name	Range	Step	Default	Description
DIx Activation threshold	16.0…200.0 V	0.1 V	88 V	Defines the activation threshold for the digital input. When "NO" is the selected polarity, the measured voltage exceeding this setting activates the input. When "NC" is the selected polarity, the measured voltage exceeding this setting deactivates the input.
DIx Release threshold	10.0…200.0 V	0.1 V	60V	Defines the release threshold for the digital input. When "NO" is the selected polarity, the measured voltage below this setting deactivates the input. When "NC" is the selected polarity, the measured voltage below this setting activates the input.
DIx Activation delay	0.000…1800.000 s	0.001 s	0.000 s	Defines the delay when the status changes from 0 to 1. Not visible when DI has been set to AC mode with "DIx AC mode" parameter.
DIx Drop-off time	0.000…1800.000 s	0.001 s	0.000 s	Defines the delay when the status changes from 1 to 0.
DIx AC Mode	• Disabled • Enabled	-	Disabled	Selects whether or not a 30-ms deactivation delay is added to take the alternating current into account. The "DIx Release threshold" parameter is hidden and forced to 10 % of the set "DIx Activation threshold" parameter.
DIx Counter	$0…2^{32}–1$	1	0	Displays the number of times the digital input has changed its status from 0 to 1.
DIx Clear counter	• - • Clear	-	-	Resets the DIx counter value to zero.

The user can set the activation threshold individually for each digital input. When the activation and release thresholds have been set properly, they will result in the digital input states to be activated and released reliably. The selection of the normal state between normally open (NO) and normally closed (NC) defines whether or not the digital input is considered activated when the digital input channel is energized.

The diagram below depicts the digital input states when the input channels are energized and de-energized.

Figure. 8.5.1 - 239. Digital input state when energizing and de-energizing the digital input channels.

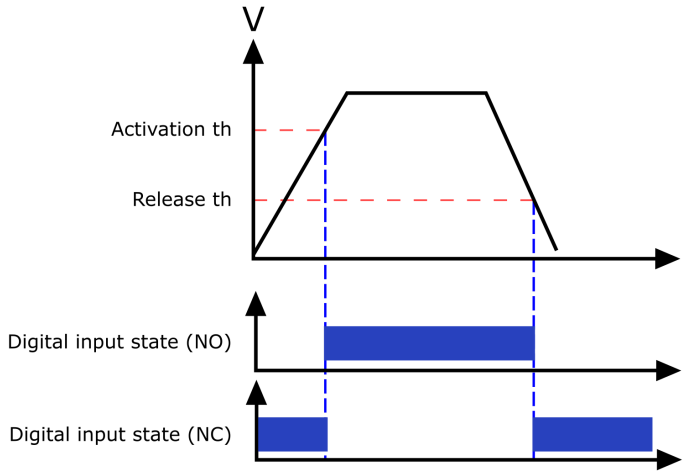

Digital input descriptions

Option card inputs can be given a description. The user defined description are displayed in most of the menus:

- logic editor
- matrix
- block settings
- event history
- disturbance recordings
- etc.

Table. 8.5.1 - 457. Digital input user description.

Name	Range	Default	Description
User editable description DIx	1...31 characters	DIx	Description of the digital input. This description is used in several menu types for easier identification.

NOTICE!
After editing user descriptions the event history will start to use the new description only after resetting the HMI. HMI can be reset from *General → Device info → HMI restart*.

Digital input voltage measurements

Digital input option card channels measure voltage on each channel. The measured voltage can be seen at *Control → Device IO → Digital inputs → Digital input voltages*.

Table. 8.5.1 - 458. Digital input channel voltage measurement.

Name	Range	Step	Description
DIx Voltage now	0.000...275.000 V	0.001 V	Voltage measurement of a digital input channel.

© Arcteq Relays Ltd
IM00021

8.5.2 Digital output module (optional)

Figure. 8.5.2 - 240. Digital output module (DO5) with five add-on digital outputs. Can be equipped with standard screw terminals or spring cage terminals for connection.

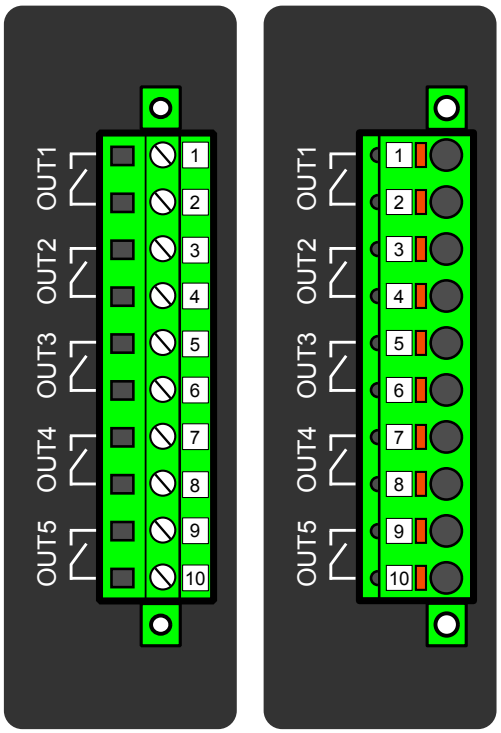

Connector	Description
X 1–2	OUTx + 1 (1st and 2nd pole NO)
X 3–4	OUTx + 2 (1st and 2nd pole NO)
X 5–6	OUTx + 3 (1st and 2nd pole NO)
X 7–8	OUTx + 4 (1st and 2nd pole NO)
X 9–10	OUTx + 5 (1st and 2nd pole NO)

The DO5 module is an add-on module with five (5) mechanical type digital outputs. This module can be ordered directly to be installed into the device in the factory, or it can be upgraded in the field after the device's original installation when required. The properties of the outputs in this module are the same as those of the outputs in the main processor module. Output control logic is user configurable. All digital outputs are controlled in 5 ms program cycles. The rated voltage of the outputs is 250 VAC/DC.

For the naming convention of the digital outputs provided by this module please refer to the chapter titled "Construction and installation".

For technical details please refer to the chapter titled "Digital output module" in the "Technical data" section of this document.

The hardware configuration code of this module is "C". For more information, please refer to the "Ordering information" chapter of this document.

Digital output settings

The parameters described in the table below can be found at *Control → Device I/O → Digital Outputs → Digital Output Settings* in the device settings.

Table. 8.5.2 - 459. Digital output user description.

Name	Range	Default	Description
OUTx Polarity	• NO • NC	NO	Digital outputs are configured as “normally open” relays by default. Each output can be changed to “normally closed” using the "OUTx Polarity" parameter. Please note that this change is implemented in software only. If the device is powered off, the outputs will revert to an open state and return to the configured polarity once power is restored. If a truly “normally closed” contact is required, use the changeover relay OUT5 available in the CPU module of the device.

Digital output descriptions

Option card outputs can be given a description. The user defined description are displayed in most of the menus:

- logic editor
- matrix
- block settings
- event history
- disturbance recordings
- etc.

The parameters described in the table below can be found at *Control → Device I/O → Digital Outputs → Digital Output Descriptions* in the device settings.

Table. 8.5.2 - 460. Digital output user description.

Name	Range	Default	Description
User editable description OUTx	1...31 characters	OUTx	Description of the digital output. This description is used in several menu types for easier identification.

NOTICE!
After editing user descriptions the event history will start to use the new description only after resetting the HMI. HMI can be reset from *General → Device info → HMI restart*.

© Arcteq Relays Ltd
IM00021

8.5.3 High-speed and high-current output module (optional)

Figure. 8.5.3 - 241. High-speed and high-current output module with three add-on high-speed outputs. Can be equipped with standard screw terminals or spring cage terminals for connection.

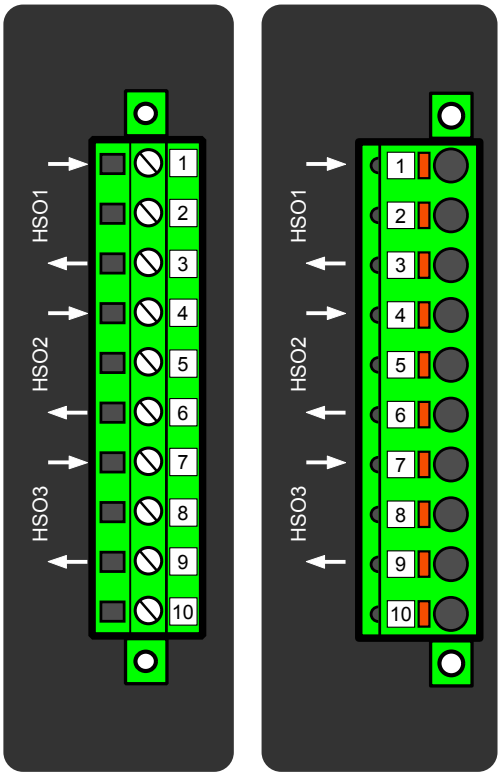

Connector	Description
X 1	HSOx + 1 in
X 2	N/A
X 3	HSOx + 1 out
X 4	HSOx + 2 in
X 5	N/A
X 6	HSOx + 2 out
X 7	HSOx + 3 in
X 8	N/A
X 9	HSOx + 3 out
X 10	N/A

The high-speed and high-current module is an add-on module with three (3) hybrid outputs consisting of a semiconductor and a relay connected in parallel. This module can be ordered directly to be installed into the device in the factory, or it can be upgraded in the field after the device's original installation when required. Output control logic is user configurable. All high-speed outputs are controlled in 1 ms program cycles.

For technical details please refer to the chapter titled "High-speed output module" in the "Technical data" section of this document.

The hardware configuration code of this module is "R". For more information, please refer to the "Ordering information" chapter of this document.

HSO Input Settings menu

The parameters described in the table below can be found at *Control → Device I/O → HSO Inputs→ HSO Input Settings* in the device settings.

Table. 8.5.3 - 461. HSO input parameters.

Name	Range	Step	Default	Description
HSO1…9 TCS Polarity	NC (Normally closed)	-	NC	The inputs on high-speed output cards are normally closed contacts, meaning they remain in the closed state under normal conditions and indicate ‘0’ when the circuit is energized.
HSO1…9 TCS Drop-off time	0.000…1800.000 s	0.001 s	0.200 s	Defines the delay when the status changes from 0 to 1.
HSO1…9 TCS AC Mode	• Disabled • Enabled	-	Disabled	Selects whether or not a 30 ms deactivation delay is added to take the alternating current into account. The "DIx Release threshold" parameter is hidden and forced to 10 % of the set "DIx Activation threshold" parameter.
HSO1…9 TCS Counter	0…4294967295	1	0	Displays the number of times the input has changed its status from 0 to 1.
HSO1…9 TCS Clear counter	• - • Clear	-	-	Resets the input activation counter value to zero.

HSO Output Settings menu

The parameters described in the table below can be found at *Control → Device I/O → HSO Outputs → HSO Output Settings* in the device settings.

Table. 8.5.3 - 462. HSO output parameters.

Name	Range	Step	Default	Description
HSO1…9 Polarity	• NO • NC	-	NO	The inputs on high-speed output cards are normally closed contacts, meaning they remain in the closed state under normal conditions and indicate ‘0’ when the circuit is energized.

HSO output and input descriptions

Option card outputs and inputs can be given a description. The user defined description are displayed in most of the menus:

- logic editor
- matrix

© Arcteq Relays Ltd
IM00021

- block settings
- event history
- disturbance recordings
- etc.

Table. 8.5.3 - 463. HSO input and output user description.

Name	Range	Default	Description
User editable description HSOx	1...31 characters	HSOx	Description of the high-speed output. This description is used in several menu types for easier identification.
User editable description HSO1…9 TCS	1...31 characters	HSO1…9 TCS	Description of the high-speed output. This description is used in several menu types for easier identification.

NOTICE!
After editing user descriptions the event history will start to use the new description only after resetting the HMI. HMI can be reset from *General → Device info → HMI restart*.

8.5.4 Milliampere output module (4x mA out & 1x mA in) (optional)

Figure. 8.5.4 - 242. Milliampere output (mA) I/O module connections. Can be equipped with standard screw terminals or spring cage terminals for connection.

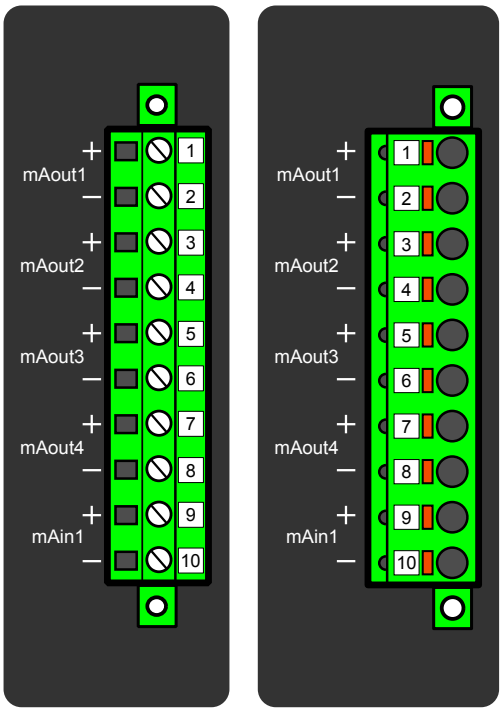

Connector	Description
Pin 1	mA OUT 1 + connector (0…24 mA)
Pin 2	mA OUT 1 – connector (0…24 mA)
Pin 3	mA OUT 2 + connector (0…24 mA)

Connector	Description
Pin 4	mA OUT 2 – connector (0…24 mA)
Pin 5	mA OUT 3 + connector (0…24 mA)
Pin 6	mA OUT 3 – connector (0…24 mA)
Pin 7	mA OUT 4 + connector (0…24 mA)
Pin 8	mA OUT 4 – connector (0…24 mA)
Pin 9	mA IN 1 + connector (0…33 mA)
Pin 10	mA IN 1 – connector (0…33 mA)

The milliampere output (mA) I/O module is an add-on module with four (4) mA outputs and one (1) mA input. Both the outputs and the input are in two galvanically isolated groups, with one pin for the positive (+) connector and one pin for the negative (–) connector.

This module can be ordered directly to be installed into the device in the factory, or it can be upgraded in the field after the device's original installation when required.

The user sets the mA I/O with the mA outputs control function. This can be done at *Control → Device I/O → mA outputs* in the device configuration settings.

For further information please refer to the chapter titled "Milliampere output module (4 x mA out & 1 x mA in)" in the "Technical data" section of this manual.

The hardware configuration code of this module is "I". For more information, please refer to the "Ordering information" chapter of this document.

8.5.5 Milliampere input module (4x mA in & 1x mA out) (optional)

Figure. 8.5.5 - 243. Milliampere input (mA) I/O module connections. Can be equipped with standard screw terminals or spring cage terminals for connection.

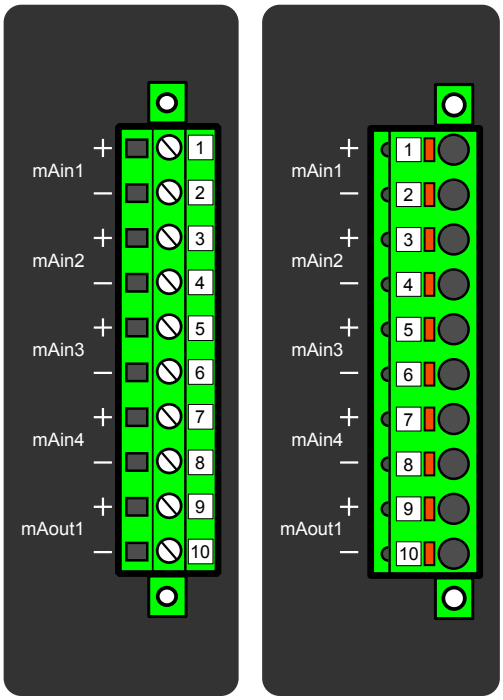

© Arcteq Relays Ltd
IM00021

Connector	Description
Pin 1	mA IN 1 + connector (0…24 mA)
Pin 2	mA IN 1 – connector (0…24 mA)
Pin 3	mA IN 2 + connector (0…24 mA)
Pin 4	mA IN 2 – connector (0…24 mA)
Pin 5	mA IN 3 + connector (0…24 mA)
Pin 6	mA IN 3 – connector (0…24 mA)
Pin 7	mA IN 4 + connector (0…24 mA)
Pin 8	mA IN 4 – connector (0…24 mA)
Pin 9	mA OUT 1 + connector (0…33 mA)
Pin 10	mA OUT 1 – connector (0…33 mA)

The milliampere input (mA) I/O module is an add-on module with four (4) mA inputs and one (1) mA output. Both the inputs and the output are in two galvanically isolated groups, with one pin for the positive (+) connector and one pin for the negative (–) connector.

This module can be ordered directly to be installed into the device in the factory, or it can be upgraded in the field after the device's original installation when required.

The user sets the mA I/O with the mA output control function. This can be done at *Control → Device I/O → mA outputs* in the device configuration settings.

For further information please refer to the chapter titled "Milliampere input module (1x mA out & 4x mA in)" in the "Technical data" section of this manual.

The hardware configuration code of this module is "T". For more information, please refer to the "Ordering information" chapter of this document.

8.5.6 Point sensor arc protection module (optional)

Figure. 8.5.6 - 244. Arc protection module. Can be equipped with standard screw terminals or spring cage terminals for connection.

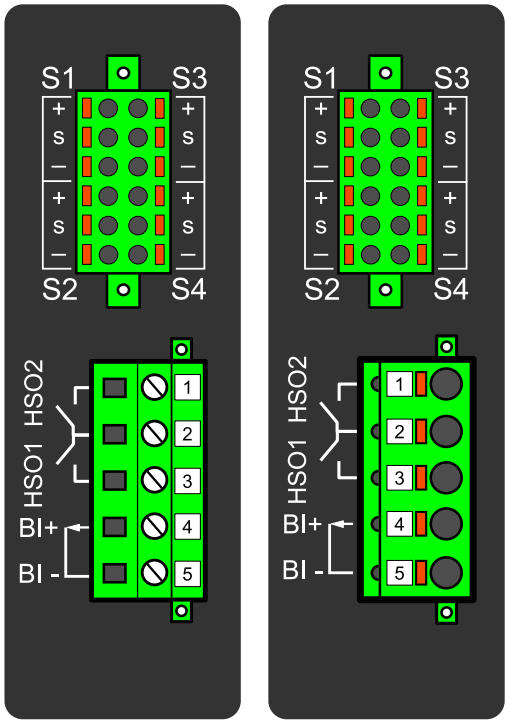

Table. 8.5.6 - 464. Module connections.

Connector	Description
S1	Light sensor channels 1…4 with positive ("+"), sensor ("S") and negative ("–").
S2	
S3	
S4	
X 1	HSO2 (+, NO)
X 2	Common battery positive terminal (+) for the HSOs.
X 3	HSO1 (+, NO)
X 4	Binary input 1 (+ pole)
X 5	Binary input 1 (– pole)

The arc protection module is an add-on module with four (4) light sensor channels, two (2) high-speed semiconductor outputs and one (1) binary input. This module can be ordered directly to be installed into the device in the factory, or it can be upgraded in the field after the device's original installation when required. Each channel can have up to three (3) light sensors serially connected to it.

High-speed outputs can used as signaling outputs. HSO1 and HSO2 can send overcurrent or light information to external AQ 100 or AQ 250 series devices.

© Arcteq Relays Ltd
IM00021

The rated voltage of the binary input is 24 VDC. The pick-up threshold is ≥16 VDC. The binary input can be used for receiving external light signal or other signals related to arc protection applications. Please note that the binary input's delay is 5…10ms.

> NOTICE!
> BI1, HSO1 and HSO2 are not visible in the *Binary inputs* and *Binary outputs* menus (*Control → Device I/O*), they can only be programmed in the arc protection function matrix menu (*Protection → Arc protection → I/O → Direct output control* and *HSO control*).

For further information please refer to the chapter titled "Point sensor arc protection module" in the "Technical data" section of this manual.

The hardware configuration code of this module is "D". For more information, please refer to the "Ordering information" chapter of this document.

8.5.7 RTD input module (optional)

Figure. 8.5.7 - 245. RTD input module connectors.

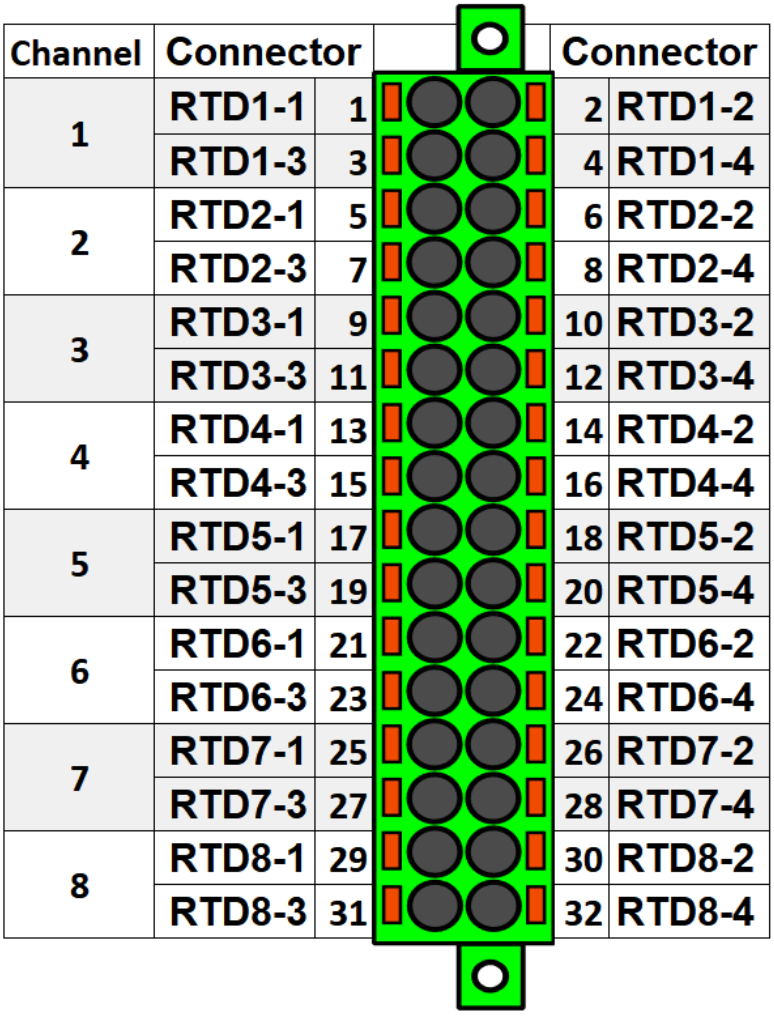

Channel	Connector		Connector	
1	RTD1-1	1	2	RTD1-2
	RTD1-3	3	4	RTD1-4
2	RTD2-1	5	6	RTD2-2
	RTD2-3	7	8	RTD2-4
3	RTD3-1	9	10	RTD3-2
	RTD3-3	11	12	RTD3-4
4	RTD4-1	13	14	RTD4-2
	RTD4-3	15	16	RTD4-4
5	RTD5-1	17	18	RTD5-2
	RTD5-3	19	20	RTD5-4
6	RTD6-1	21	22	RTD6-2
	RTD6-3	23	24	RTD6-4
7	RTD7-1	25	26	RTD7-2
	RTD7-3	27	28	RTD7-4
8	RTD8-1	29	30	RTD8-2
	RTD8-3	31	32	RTD8-4

The RTD input module is an add-on module with eight (8) RTD input channels. Each input supports 2-wire, 3-wire and 4-wire RTD sensors. The sensor type can be selected with software for two groups, four channels each. The card supports Pt100 and Pt1000 sensors.

For further information please refer to the chapter titled "RTD input module" in the "Technical data" section of this manual.

The hardware configuration code of this module is "F". For more information, please refer to the "Ordering information" chapter of this document.

Figure. 8.5.7 - 246. RTD sensor connection types.

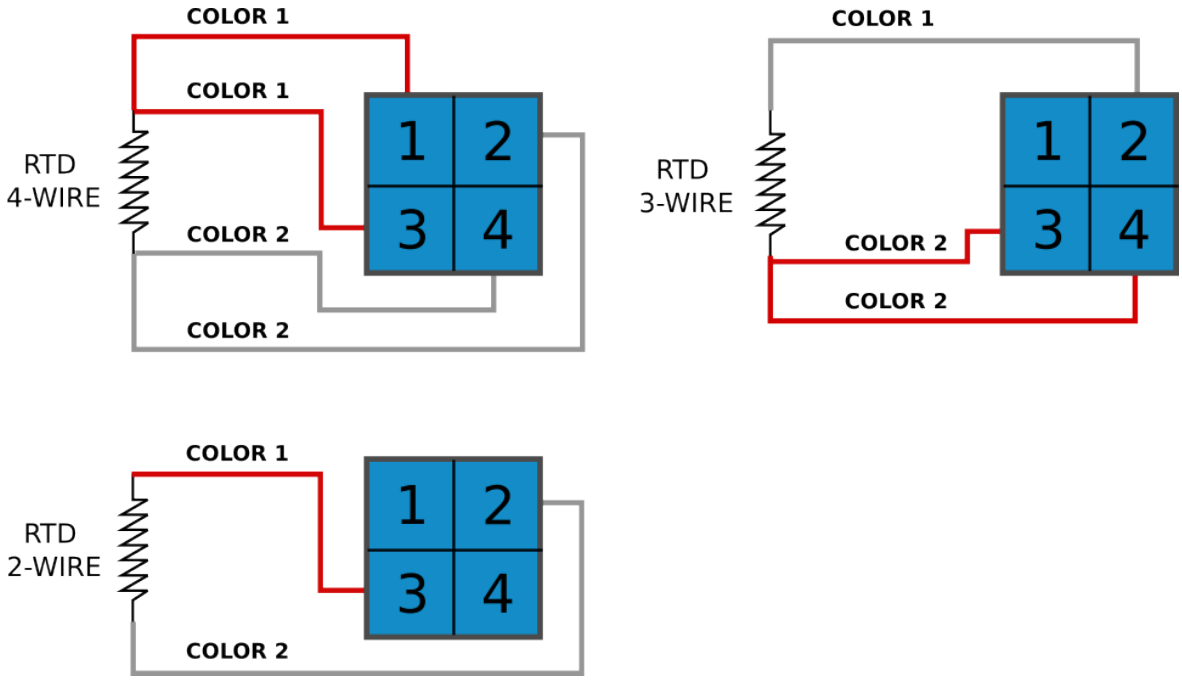

8.5.8 Double RJ45 Ethernet & IRIG-B communication module (optional)

Figure. 8.5.8 - 247. Double RJ-45 10/100 Mbps Ethernet communication module.

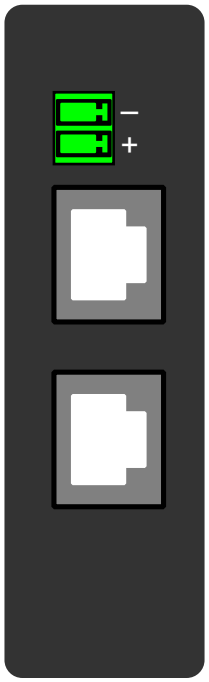

© Arcteq Relays Ltd
IM00021

Connector	Description
Two-pin connector	• IRIG-B input
RJ-45 connectors	• Two Ethernet ports • RJ-45 connectors • 10BASE-T and 100BASE-TX

This option card supports daisy chain configurations.

For further information please refer to the chapter titled "Double RJ45 Ethernet & IRIG-B communication module" in the "Technical data" section of this manual.

The hardware configuration code of this module is "G". For more information, please refer to the "Ordering information" chapter of this document.

8.5.9 Double SFP Ethernet & IRIG-B communication module (optional)

Figure. 8.5.9 - 248. Double SFP 100 Mbps Ethernet communication module.

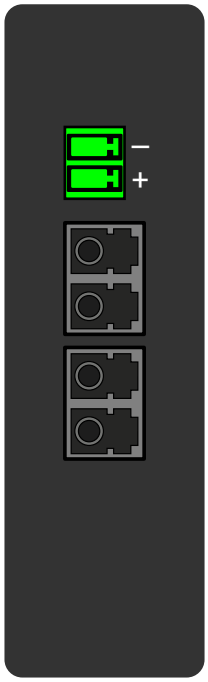

Connector	Description
Two-pin connector	• IRIG-B input
SFP slots	• Two SFP slots • Compatible SFP modules available as accessories

For further information please refer to the chapter titled "Double SFP Ethernet & IRIG-B communication module" in the "Technical data" section of this manual.

The hardware configuration code of this module is "Q". For more information, please refer to the "Ordering information" chapter of this document.

8.5.10 Double ST 100 Ethernet & IRIG-B communication module (optional)

Figure. 8.5.10 - 249. Double ST 100 Mbps Ethernet communication module connectors.

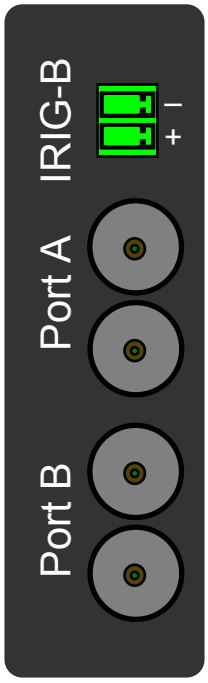

Connector	Description
Two-pin connector	• IRIG-B input
ST connectors	• Duplex ST connectors • 62.5/125 µm or 50/125 µm multimode fiber • Transmitter wavelength: 1260…1360 nm (nominal: 1310 nm) • Receiver wavelength: 1100…1600 nm • 100BASE-FX • Up to 2 km

This option cards supports redundant ring configuration and multidrop configurations. Please note that each ring can only contain AQ 250 series devices, and any third party devices must be connected to a separate ring.

For further information please refer to the chapter titled "Double ST Ethernet & IRIG-B communication module" in the "Technical data" section of this manual.

The hardware configuration code of this module is "H". For more information, please refer to the "Ordering information" chapter of this document.

© Arcteq Relays Ltd
IM00021

Figure. 8.5.10 - 250. Example of a multidrop configuration.

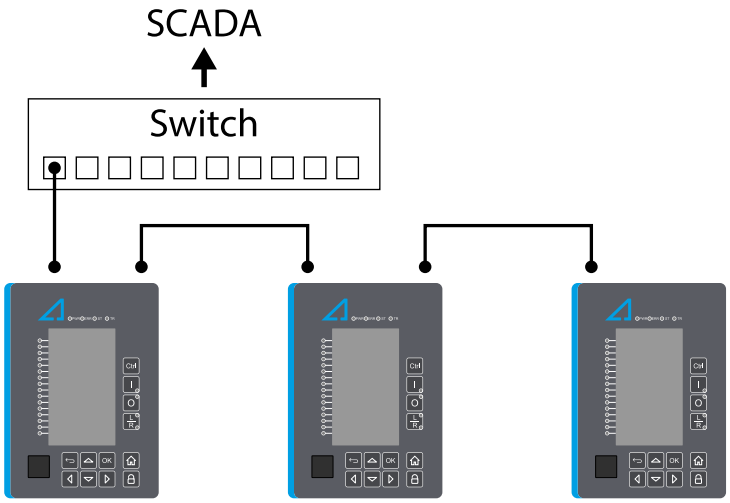

8.5.11 Double LC or RJ45 (HSR/PRP) Ethernet communication module (optional)

Figure. 8.5.11 - 251. LC and RJ45 100 Mbps Ethernet module connectors.

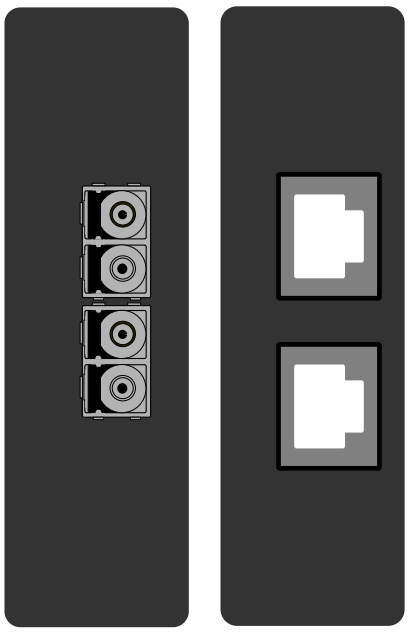

Card type	Description
LC ports	• Communication port D, 100 Mbps LC fiber connector. • 62.5/125 µm or 50/125 µm multimode (glass). • Wavelength 1300 nm. • HSR and PRP protocols supported.
RJ45	• RJ-45 connectors. • 10BASE-T and 100BASE-TX. • HSR and PRP protocols supported.

For further information please refer to the chapters titled "Double LC (HSR/PRP) Ethernet communication module" and "Double RJ45 (HSR/PRP) Ethernet communication module" in the "Technical data" section of this manual.

The hardware configuration codes of these modules are "J" (Double LC 100Mb Ethernet) and "K" (Double RJ45 100Mb Ethernet). For more information, please refer to the "Ordering information" chapter of this document.

8.5.12 Serial RS-232 communication module (optional)

Figure. 8.5.12 - 252. Serial RS-232 module connectors.

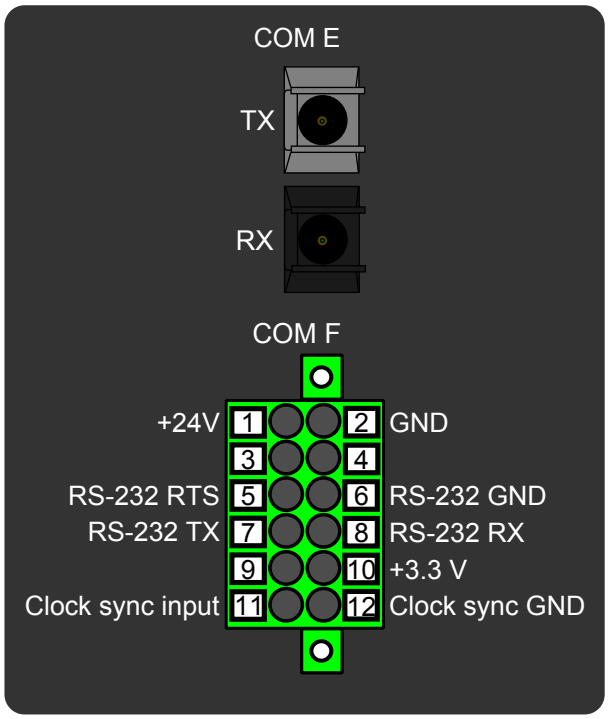

Table. 8.5.12 - 465. Module connections.

Connector	Pin	Name	Description
COM E	-	Serial fiber	• Serial-based communications • Port options: ◦ Glass/glass ◦ Plastic/plastic ◦ Glass/plastic ◦ Plastic/glass • Wavelength 660 nm • Compatible with 50/125 µm, 62.5/125 µm, 100/140 µm, and 200 µm Plastic-Clad Silica (PCS) fiber • Compatible with ST connectors
COM F	1	+24 V input	Optional external auxiliary voltage for serial fiber.
	2	GND	
	3	-	Not in use.
	4		

© Arcteq Relays Ltd
IM00021

Connector	Pin	Name	Description
	5	RS-232 RTS	Serial based communications.
	6	RS-232 GND	
	7	RS-232 TX	
	8	RS-232 RX	
	9	-	Not in use.
	10	+3.3 V output (spare)	Spare power source for external equipment (45 mA).
	11	Clock sync input	Clock synchronization input (supports IRIG-B).
	12	Clock sync GND	

The option card includes two serial communication interfaces: COM E is a serial fiber interface with glass/glass, plastic/plastic, glass/plastic and plastic/glass options, COM F is an RS-232 interface.

For further information please refer to the chapter titled "RS-232 & serial fiber communication module" in the "Technical data" section of this manual.

The hardware configuration codes of these modules are "L", "M", "N" and "O". For more information, please refer to the "Ordering information" chapter of this document.

8.6 Dimensions and installation

The device can be installed either to a standard 19” rack or to a switchgear panel with cutouts. The desired installation type is defined in the order code.

The figures below describe the device dimensions (first figure), the device installation (second), and the panel cutout dimensions and device spacing (third).

Figure. 8.6 - 253. Device dimensions.

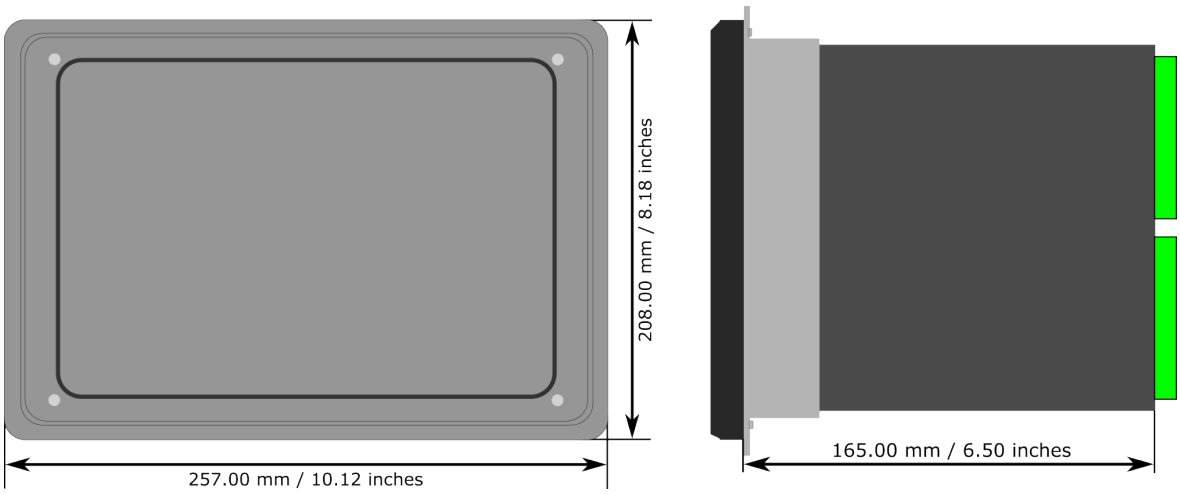

Figure. 8.6 - 254. Device installation.

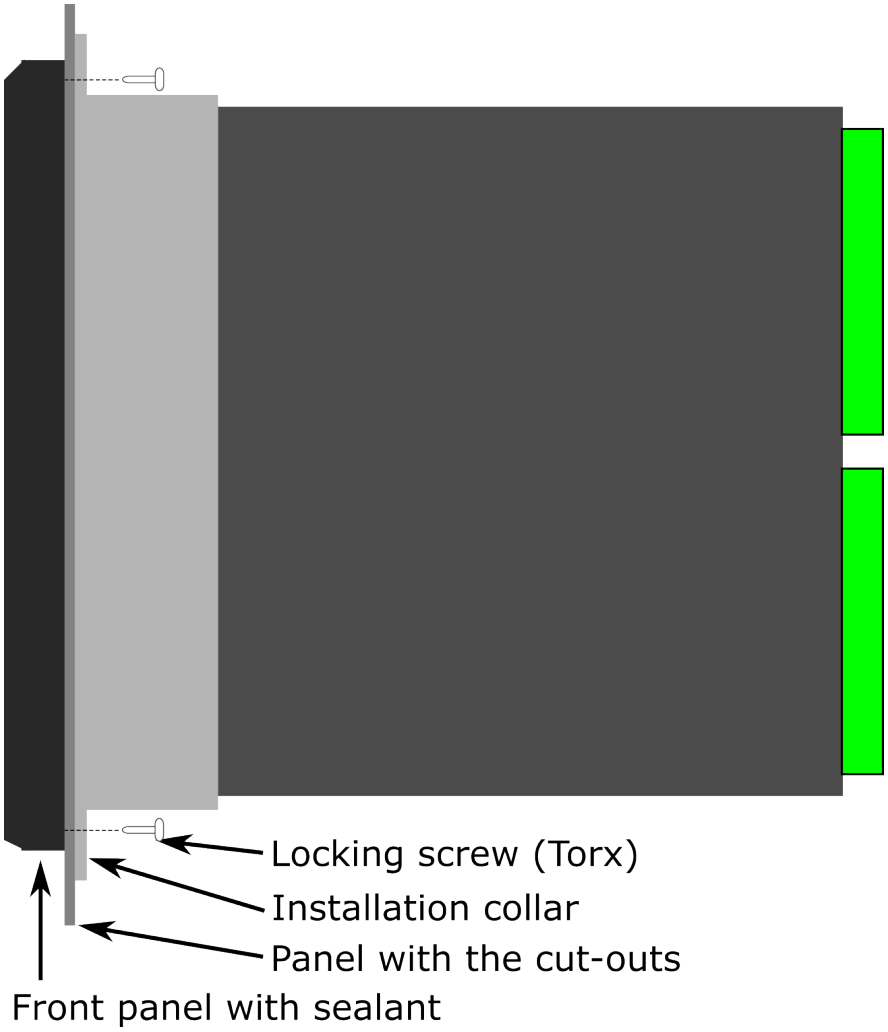

© Arcteq Relays Ltd
IM00021

Figure. 8.6 - 255. Panel cut-out and spacing of the devices.

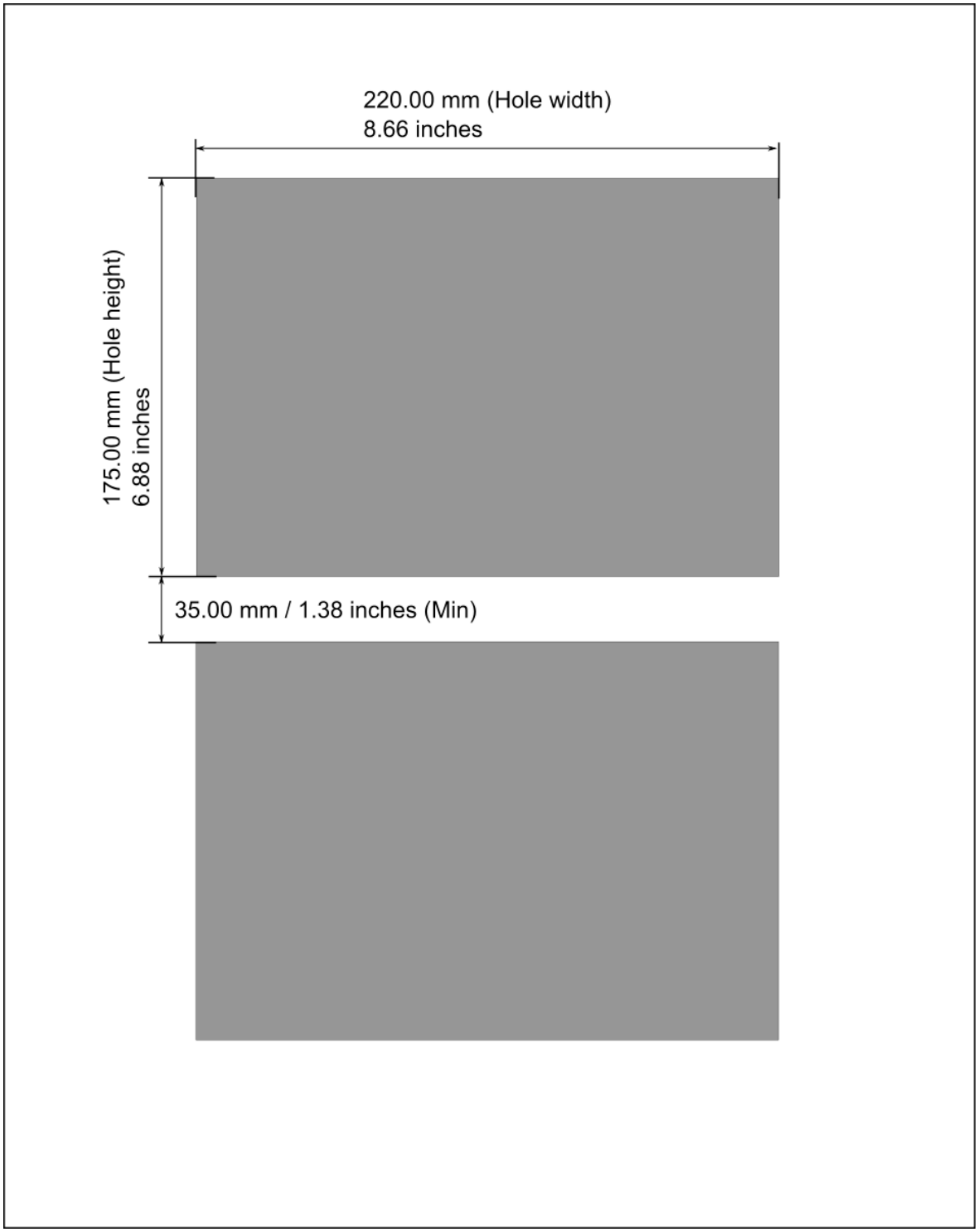

9 Technical data

9.1 Hardware

9.1.1 Measurements

9.1.1.1 Current measurement

Table. 9.1.1.1 - 466. Technical data for the current measurement module.

General information	
Spare part code	#SP-2XX-CM
Compatibility	AQ 210 series AQ 250 series AQ-ONE
Connections	
Measurement channels/CT inputs	Three phase current inputs: IL1 (A), IL2 (B), IL3 (C) Two residual current inputs: Coarse residual current input I01, Fine residual current input I02
Phase current inputs (A, B, C)	
Sample rate	64 samples per cycle in frequency range 6...75Hz
Rated current I_N	5 A (configurable 0.2…10 A)
Thermal withstand	20 A (continuous) 100 A (for 10 s) 500 A (for 1 s) 1250 A (for 0.01 s)
Frequency measurement range	From 6…75Hz fundamental, up to the 31st harmonic current
Current measurement range	5 mA…250 A (RMS)
Current measurement inaccuracy	0.005…4.000 × I_N < ±0.5 % or < ±15 mA 4…20 × I_N < ±0.5 % 20…50 × I_N < ±1.0 %
Angle measurement inaccuracy	< ±0.2° (I> 0.1 A) < ±1.0° (I≤ 0.1 A)
Burden (50/60 Hz)	<0.1 VA
Transient overreach	<8 %
Coarse residual current input (I01)	
Rated current I_N	1 A (configurable 0.1…10 A)

© Arcteq Relays Ltd
IM00021

Thermal withstand	25 A (continuous) 100 A (for 10 s) 500 A (for 1 s) 1250 A (for 0.01 s)
Frequency measurement range	From 6…75 Hz fundamental, up to the 31st harmonic current
Current measurement range	5 mA…150 A (RMS)
Current measurement inaccuracy	0.002…10.000 × I_N < ±0.5 % or < ±3 mA 10…150 × I_N < ±0.5 %
Angle measurement inaccuracy	< ±0.2° (I> 0.05 A) < ±1.0° (I≤ 0.05 A)
Burden (50/60Hz)	<0.1 VA
Transient overreach	<5 %
Fine residual current input (I02)	
Rated current I_N	0.2 A (configurable 0.001…10 A)
Thermal withstand	25 A (continuous) 100 A (for 10 s) 500 A (for 1 s) 1250 A (for 0.01 s)
Frequency measurement range	From 6…75 Hz fundamental, up to the 31st harmonic current
Current measurement range	1 mA…75 A (RMS)
Current measurement inaccuracy	0.002…25.000 × I_N < ±0.5 % or < ±0.6 mA 25…375 × I_N < ±1.0 %
Angle measurement inaccuracy	< ±0.2° (I> 0.01 A) < ±1.0° (I≤ 0.01 A)
Burden (50/60Hz)	<0.1 VA
Transient overreach	<5 %
Screw connection terminal block (standard)	
Nominal cross section (solid or stranded wire)	4 mm^2
Ring lug terminal block connection (option)	
Ring terminal dimensions	Max 8mm diameter, with minimum 3,5mm screw hole

NOTICE!
Current measurement accuracy has been verified with 50/60 Hz.

The amplitude difference is 0.2 % and the angle difference is 0.5 degrees higher at 16.67 Hz and other frequencies.

9.1.1.2 Voltage measurement

Table. 9.1.1.2 - 467. Technical data for the voltage measurement module.

General information	
Spare part code	#SP-2XX-VT
Compatibility	AQ 210 series AQ 250 series AQ-ONE
Connection	
Measurement channels/VT inputs	4 independent VT inputs (U1, U2, U3 and U4)
Measurement	
Sample rate	64 samples per cycle in frequency range 6...75Hz
Voltage measuring range	0.50…480.00 V (RMS)
Rated voltage U_N	100 V / 110 V / 115 V / 120 V (RMS)
Voltage measurement inaccuracy	1…2 V ±1.5 % 2…10 V ±0.5 % 10…480 V ±0.35 %
Angle measurement inaccuracy	±0.2 degrees (15…300 V) ±1.5 degrees (1…15 V)
Voltage measurement bandwidth (freq.)	7…75 Hz fundamental, up to the 31st harmonic voltage
Terminal block connection	
Nominal cross section (solid or stranded wire)	6 mm^2
Input impedance	~24.5 MΩ
Burden (50/60 Hz)	<0.02 VA
Thermal withstand	630 V_{RMS} (continuous)

NOTICE!
Voltage measurement accuracy has been verified with 50/60 Hz.

The amplitude difference is 0.2 % and the angle difference is 0.5 degrees higher at 16.67 Hz and other frequencies.

9.1.1.3 Voltage memory

Table. 9.1.1.3 - 468. Technical data for the voltage memory function.

Measurement inputs

© Arcteq Relays Ltd
IM00021

Voltage inputs	U_{L1}, U_{L2}, U_{L3} U_{L12}, U_{L23}, U_{L31} + U_0
Current inputs (back-up frequency)	Phase current inputs: I_{L1} (A), I_{L2} (B), I_{L3} (C)
Pick-up	
Pick-up voltage setting Pick-up current setting (optional)	2.00…50.00 %U_N, setting step 0.01 x %U_N 0.01…50.00 × I_N, setting step 0.01 × I_N
Inaccuracy: - Voltage - Current	±1.5 %U_{SET} or ±30 mV ±0.5 %I_{SET} or ±15 mA (0.10…4.0 × I_{SET})
Operation time	
Angle memory activation delay	<20 ms (typically 5 ms)
Maximum active time	0.020…50.000 s, setting step 0.005 s
Inaccuracy: - Definite time (U_M/U_{SET} ratio >1.05)	±1.0 % or ±35 ms
Angle memory	
Angle drift while voltage is absent	±1.0° per 1 second
Reset	
Reset ratio: - Voltage memory (voltage) - Voltage memory (current)	103 % of the pick-up voltage setting 97 % of the pick-up current setting
Reset time	<50 ms

NOTICE!
Voltage memory is activated only when all line voltages fall below set pick-up value.

NOTICE!
Voltage memory activation captures healthy situation voltage angles, one cycle before actual activation (50Hz/20ms before “bolted” fault)

9.1.1.4 Power and energy measurement

Table. 9.1.1.4 - 469. Power and energy measurement accuracy

Power measurement P, Q, S	Frequency range 6…75 Hz
Inaccuracy	0.3 % <1.2 × I_N or 3 VA secondary 1.0 % >1.2 × I_N or 3 VA secondary
Energy measurement	**Frequency range 6…75 Hz**
Energy and power metering inaccuracy	0.5% down to 1A RMS (50/60Hz) as standard 0.2% down to 1A RMS (50/60Hz) option available (see the order code for details)

9.1.1.5 Frequency measurement

Table. 9.1.1.5 - 470. Frequency measurement accuracy.

Frequency measurement performance	
Frequency measuring range	6…75 Hz fundamental, up to the 31st harmonic current or voltage
Inaccuracy	10 mHz

9.1.2 CPU & Power supply

Table. 9.1.2 - 471. General information for the CPU module.

General information	
Spare part code	#SP-250-CPU
Compatibility	AQ 210 series AQ 250 series AQ-ONE
Terminal block connection	
Solid or stranded wire Nominal cross section	2.5 mm^2
RS-485 serial terminal block connection	
Maximum cross section (solid or stranded wire)	1.5 mm^2

9.1.2.1 Auxiliary voltage

Table. 9.1.2.1 - 472. Power supply model A

Rated values	
Rated auxiliary voltage	88…265 V (AC/DC)
Power consumption	< 20 W (no option cards) < 40 W (maximum number of option cards)
Maximum permitted interrupt time	< 40 ms with 110 VDC
DC ripple	< 15 %
Other	
Minimum recommended fuse rating	MCB C2

Table. 9.1.2.1 - 473. Power supply model B

Rated values

© Arcteq Relays Ltd
IM00021

Rated auxiliary voltage	18…72 VDC
Power consumption	< 20 W (no option cards) < 40 W (maximum number of option cards)
Maximum permitted interrupt time	< 40 ms with 24 VDC
DC ripple	< 15 %
Other	
Minimum recommended fuse rating	MCB C2

9.1.2.2 CPU communication ports

Table. 9.1.2.2 - 474. Front panel local communication port.

Port	
Port media	Copper Ethernet RJ-45
Number of ports	1
Port protocols	PC-protocols FTP
Features	
Data transfer rate	100 MB/s
System integration	Can't be used for system protocols, only for local programming

Table. 9.1.2.2 - 475. Rear panel system communication port A.

Port	
Port media	Copper Ethernet RJ-45
Number of ports	1
Features	
Port protocols	IEC 61850 (1st edition) IEC61850 (2nd edition) IEC 104 Modbus/TCP DNP3 FTP
Data transfer rate	100 MB/s
System integration	Can be used for system protocols and for local programming

Table. 9.1.2.2 - 476. Rear panel system communication port B.

Port

Port media	Copper RS-485
Number of ports	1
Features	
Port protocols	Modbus/RTU IEC 103 IEC 101 DNP3 SPA
Data transfer rate	65 580 kB/s
System integration	Can be used for system protocols

9.1.2.3 CPU digital inputs

Table. 9.1.2.3 - 477. CPU model-isolated digital inputs, with thresholds defined by order code.

Rated values	
Rated auxiliary voltage	265 V (AC/DC)
Nominal voltage	Order code defined: 24, 110, 220 V (AC/DC)
Pick-up threshold Release threshold	Order code defined: 19, 90,170 V Order code defined: 14, 65, 132 V
Scanning rate	5 ms
Settings	
Pick-up delay	Software settable: 0…1800 s
Polarity	Software settable: Normally On/Normally Off
Current drain	2 mA

9.1.2.4 CPU digital outputs

Table. 9.1.2.4 - 478. Digital outputs (Normally Open)

Rated values	
Rated auxiliary voltage	265 V (AC/DC)
Continuous carry	5 A
Make and carry 0.5 s Make and carry 3 s	30 A 15 A
Breaking capacity, DC (L/R = 40 ms) at 48 VDC at 110 VDC at 220 VDC	 1 A 0.4 A 0.2 A

© Arcteq Relays Ltd
IM00021

Control rate	5 ms
Settings	
Polarity	Software settable: Normally Open / Normally Closed

Table. 9.1.2.4 - 479. Digital outputs (Change-Over)

Rated values	
Rated auxiliary voltage	265 V (AC/DC)
Continuous carry	2.5 A
Make and carry 0.5 s Make and carry 3 s	30 A 15 A
Breaking capacity, DC (L/R = 40 ms) at 48 VDC at 110 VDC at 220 VDC	 1 A 0.3 A 0.15 A
Control rate	5 ms
Settings	
Polarity	Software settable: Normally Open / Normally Closed

CAUTION!
Please note, that signaling relay 5 and system fault's signaling relay are designed only for signaling purposes, and are not to be used in trip coil control.

9.1.3 Option cards

9.1.3.1 Digital input module

Table. 9.1.3.1 - 480. Technical data for the digital input module.

Spare part code	#SP-250-DI8
Compatibility	AQ 210 series models AQ 250 series models AQ-ONE
Rated values	
Rated auxiliary voltage	5…265 V (AC/DC)
Current drain	2 mA
Scanning rate Activation/release delay	5 ms 5...11 ms
Settings	

Pick-up threshold Release threshold	Software settable: 16…200 V, setting step 1 V Software settable: 10…200 V, setting step 1 V
Pick-up delay	Software settable: 0…1800 s
Drop-off delay	Software settable: 0…1800 s
Polarity	Software settable: Normally On/Normally Off
Terminal block connection	
Solid or stranded wire Nominal cross section	2.5 mm^2

9.1.3.2 Digital output module

Table. 9.1.3.2 - 481. Technical data for the digital output module.

Spare part code	#SP-250-DO5
Compatibility	AQ 210 series models AQ 250 series models AQ-ONE
Rated values	
Rated auxiliary voltage	265 V (AC/DC)
Continuous carry	5 A
Make and carry 0.5 s Make and carry 3 s	30 A 15 A
Breaking capacity, DC (L/R = 40 ms) at 48 VDC at 110 VDC at 220 VDC	 1 A 0.4 A 0.2 A
Control rate	5 ms
Settings	
Polarity	Software settable: Normally On/Normally Off
Terminal block connection	
Maximum cross section (solid or stranded wire)	2.5 mm^2

9.1.3.3 High-speed and high-current output module

Table. 9.1.3.3 - 482. Technical data for the high-speed and high-current output module.

Spare part code	#SP-250-HSO
Compatibility	AQ 250 series models AQ-ONE

© Arcteq Relays Ltd
IM00021

High-speed output rated values	
Rated auxiliary voltage	265 V (AC/DC)
Continuous carry	10 A
Make and carry 0.5 s Make and carry 3 s	30 A 15 A
Breaking capacity, DC (L/R = 40 ms) at 48 VDC at 110 VDC at 220 VDC	10 A
Control rate	1 ms
Operating time	Typically under 4 ms
Trip Circuit Supervision input rated values	
Rated auxiliary voltage	265 V (AC/DC)
Nominal voltage	Order code defined: 24, 110, 220 V (AC/DC)
Pick-up threshold	Order code defined: 19, 90, 170 V
Release threshold	Order code defined: 14, 65, 132 V
Scanning rate	5 ms
High-speed output settings	
Polarity	Software settable: Normally On/Normally Off
Trip Circuit Supervision input settings	
Release delay	Software settable: 0.000…1800.000 s
Polarity	Normally Closed
Current drain	2 mA
Terminal block connection	
Maximum cross section (solid or stranded wire)	2.5 mm^2

9.1.3.4 Milliampere output module (4 x mA out & 1 x mA in)

Table. 9.1.3.4 - 483. Technical data for the milliampere output module.

Spare part code	#SP-2XX-MA
Compatibility	AQ 210 series models AQ 250 series models AQ-ONE
Signals	
Output magnitudes Input magnitudes	4 × mA output signal (DC) 1 × mA input signal (DC)

mA input	
Range (hardware) Range (measurement) Inaccuracy	0...33 mA 0...24 mA ±0.1 mA
Update cycle Response time at 5 ms cycle Update cycle time inaccuracy	5...10 000 ms, setting step 5 ms ~ 15 ms (13...18 ms) Max. +20 ms above the set cycle
mA input scaling range Output scaling range	0...4000 mA -1 000 000.0000…1 000 000.0000, setting step 0.0001
mA output	
Inaccuracy at 0...24 mA	±0.01 mA
Response time at 5 ms cycle [fixed]	< 5 ms
mA output scaling range Source signal scaling range	0...24 mA, setting step 0.001 mA -1 000 000.000…1 000 000.0000, setting step 0.0001
Terminal block connection	
Maximum cross section (solid or stranded wire)	2.5 mm^2

9.1.3.5 Milliampere input module (1x mA out & 4x mA in)

Table. 9.1.3.5 - 484. Technical data for the milliampere input module.

Spare part code	#SP-250-MAIN
Compatibility	AQ 250 series models AQ-ONE
Signals	
Input magnitudes Output magnitudes	4 × mA input signal (DC) 1 × mA output signal (DC)
mA input	
Range (hardware) Range (measurement) Inaccuracy	0...33 mA 0...24 mA ±0.1 mA
Update cycle Response time at 5 ms cycle Update cycle time inaccuracy	5...10 000 ms, setting step 5 ms ~ 15 ms (13...18 ms) Max. +20 ms above the set cycle
mA input scaling range Output scaling range	0...4000 mA -1 000 000.0000…1 000 000.0000, setting step 0.0001
mA output	
Inaccuracy at 0...24 mA	±0.01 mA
Response time at 5 ms cycle [fixed]	< 5 ms

© Arcteq Relays Ltd
IM00021

mA output scaling range Source signal scaling range	0...24 mA, setting step 0.001 mA -1 000 000.000…1 000 000.0000, setting step 0.0001
Terminal block connection	
Maximum cross section (solid or stranded wire)	2.5 mm^2

9.1.3.6 Point sensor arc protection module

Table. 9.1.3.6 - 485. Technical data for the point sensor arc protection module.

Spare part code	#SP-2XX-ARC
Compatibility	AQ 210 series models AQ 250 series models AQ-ONE
Connections	
Input arc point sensor channels	S1, S2, S3, S4 (pressure and light, or light only)
Sensors per channel	3
Maximum cable length	200 m
Performance	
Pick-up light intensity	8, 25 or 50 kLx (the sensor is selectable in the order code)
Point sensor detection radius	180 degrees
Start and instant operating time (light only)	Typically <5 ms with dedicated semiconductor outputs (HSO) Typically <10 ms regular output relays

Table. 9.1.3.6 - 486. High-Speed Outputs (HSO1…2)

Rated values	
Rated auxiliary voltage	250 VDC
Continuous carry	2 A
Make and carry 0.5 s Make and carry 3 s	10 A 6 A
Breaking capacity, DC (L/R = 40 ms)	1 A/110 W
Control rate	5 ms
Operation delay	<1 ms
Polarity	Normally Off
Contact material	Semiconductor

CAUTION!
Please note that signaling relay 5 and system fault's signaling relay are designed only for signaling purposes! They are not to be used in trip coil control.

Table. 9.1.3.6 - 487. Binary input channel

Rated values	
Voltage withstand	265 VDC
Nominal voltage Pick-up threshold Release threshold	24 VDC ≥16 VDC ≤15 VDC
Scanning rate	5 ms
Polarity	Normally Off
Current drain	3 mA

Table. 9.1.3.6 - 488. Terminal block connections

Arc point sensor terminal block connections	
Maximum cross section (Solid or stranded wire)	1.5 mm^2
Binary input and HSO terminal block connections	
Maximum cross section (solid or stranded wire)	2.5 mm^2

NOTICE!
The polarity must be correct!

9.1.3.7 RTD input module

Table. 9.1.3.7 - 489. Technical data for the RTD input module.

Spare part code	#SP-2xx-RTD
Compatibility	AQ 210 series models AQ 250 series models AQ-ONE
Channels 1-8	
2/3/4-wire RTD	
Pt100 or Pt1000	
Terminal block connection	
Maximum cross section (solid or stranded wire)	1.5 mm^2

© Arcteq Relays Ltd
IM00021

9.1.3.8 Double RJ-45 Ethernet & IRIG-B communication module

Table. 9.1.3.8 - 490. Technical data for the double RJ-45 Ethernet communication module.

Spare part code	#SP-2XX-ETH-RJ45
Compatibility	AQ 210 series models AQ 250 series models AQ-ONE
Ethernet connector features	
Protocols	IEC 61850 IEC 104 Modbus/TCP DNP3 FTP
Data transfer rate	100 MB/s
System integration	Can be used for system protocols and for local programming
Number of ports	2
Communication ports	Copper Ethernet RJ-45
IRIG-B Connector	
Maximum cross section (solid or stranded wire)	1.5 mm^2

9.1.3.9 Double SFP Ethernet & IRIG-B communication module

Table. 9.1.3.9 - 491. Technical data for the double SFP Ethernet communication module.

Spare part code	#SP-250-ETH-SFP
Compatibility	AQ 250 series models AQ-ONE
Ethernet connector features	
Protocols	IEC 61850 IEC 104 Modbus/TCP DNP3 FTP
Data transfer rate	100 MB/s
System integration	Can be used for system protocols and for local programming
Number of ports	2
Communication ports	SFP
IRIG-B Connector	

Maximum cross section (solid or stranded wire)	1.5 mm^2

9.1.3.10 Double ST Ethernet & IRIG-B communication module

Table. 9.1.3.10 - 492. Technical data for the double ST 100 Mbps Ethernet communication module.

Spare part code	#SP-2XX-2XST
Compatibility	AQ 210 series models AQ 250 series models AQ-ONE
Protocols	
Protocols	IEC61850 DNP/TCP Modbus/TCP IEC104 FTP
ST connectors	
Connector type	Duplex ST connectors 62.5/125 µm or 50/125 µm multimode fiber 100BASE-FX
Number of connectors	2
Transmitter wavelength	1260…1360 nm (nominal: 1310 nm)
Receiver wavelength	1100…1600 nm
Maximum distance	2 km
Data transfer rate	100 MB/s
IRIG-B Connector	
Maximum cross section (solid or stranded wire)	1.5 mm^2

9.1.3.11 Double LC (HSR/PRP) Ethernet communication module

Table. 9.1.3.11 - 493. Technical data for the double LC 100 Mbps Ethernet communication module.

Spare part code	#SP-2XX-2LC(HSR/PRP)
Compatibility	AQ 210 series models AQ 250 series models AQ-ONE
Protocols	

© Arcteq Relays Ltd
IM00021

Protocols	IEC 61850 IEC 104 Modbus/TCP DNP3 FTP
Redundancy	HSR and PRP
Data transfer rate	100 MB/s
System integration	Can be used for system protocols and for local programming
Ports	
Number of fiber ports	2
Communication port	LC fiber connector Wavelength 1300 nm
Fiber cable	50/125 µm or 62.5/125 µm multimode (glass)

9.1.3.12 Double RJ-45 (HSR/PRP) Ethernet communication module

Table. 9.1.3.12 - 494. Technical data for the double RJ-45 100 Mbps Ethernet communication module.

Spare part code	#SP-2XX-2RJ45(HSR/PRP)
Compatibility	AQ 210 series models AQ 250 series models AQ-ONE
Features	
Protocols	IEC 61850 IEC 104 Modbus/TCP DNP3 FTP
Redundancy	HSR and PRP
Data transfer rate	100 MB/s
System integration	Can be used for system protocols and for local programming
Ports	
Number of ports	2
Communication port	Copper Ethernet RJ-45

9.1.3.13 RS-232 & serial fiber communication module

Table. 9.1.3.13 - 495. Technical data for the RS-232 & serial fiber communication module.

PP Spare part code	#SP-2XX-232PP

PG Spare part code	#SP-2XX-232PG
GP Spare part code	#SP-2XX-232GP
GG Spare part code	#SP-2XX-232GG
Compatibility	AQ 210 series models AQ 250 series models AQ-ONE
Serial fiber connections	
Connection types	• Plastic - Plastic • Plastic - Glass • Glass - Plastic • Glass - Glass
Wavelength (plastic)	660 nm
Wavelength (glass)	820 nm
Cable type	1 mm plastic fiber
RS-232 terminal block connections	
Maximum cross section (solid or stranded wire)	1.5 mm^2

9.1.4 Display

Table. 9.1.4 - 496. Technical data for the HMI TFT display.

General information	
Spare part code	#SP-200-DISP
Compatibility	AQ-250 series models
Dimensions and resolution	
Number of dots/resolution	800 x 480
Size	154.08 × 85.92 mm (6.06 × 3.38 in)
Display	
Type of display	TFT
Color	RGB color

© Arcteq Relays Ltd
IM00021

9.2 Functions

9.2.1 Protection functions

9.2.1.1 Generator/motor/transformer differential protection (Idb>/Idi>/I0dHV>/I0dLV>; 87T/87G/87M/87N)

Table. 9.2.1.1 - 497. Technical data for the transformer differential protection function.

Measurement inputs	
Current inputs (CT1 and CT2 current measurement module)	Phase current inputs: I_{L1} (A), I_{L2} (B), I_{L3} (C) Residual current channel I_{01} (Coarse) Residual current channel I_{02} (Fine) Calculated residual current: I_{L1} (A), I_{L2} (B), I_{L3} (C)
Current input magnitudes	The phase currents of the high-voltage and the low-voltage sides. Residual current measurement for HV/LV REF protection. Phase currents 2nd and 5th harmonic measurement.
Characteristics (differential and REF)	
Differential calculation mode Bias calculation mode	Add or subtract (CT direction) Average or maximum (sensitivity)
Idb> pick-up Turnpoint 1 Slope 1 Turnpoint 2 Slope 2	0.01…100.00 %, step 0.01 %, default 10.00 % 0.01…50.00 × I_N, step 0.01 × I_N, default 1.00 × I_N 0.01…250.00 %, step 0.01 %, default 10.00 % 0.01…50.00 × I_N, step 0.01 × I_N, default 3.00 × I_N 0.01…250.00 %, step 0.01 %, default 200.00 %
Idi> pick-up	200.00...1500.00 %, step 0.01 %, default 600.00 %
Internal harmonic blocking selection	None, 2nd harmonic, 5th harmonic, both 2nd and 5th harmonic.
2nd harmonic blocking pick-up	0.01…50.00 %, step 0.01 %, default 15.00 %
5th harmonic blocking pick-up	0.01…50.00 %, step 0.01 %, default 35.00 %
Inaccuracy: - Differential current	±3.0 %I_{SET} or ±30 mA (0.10…4.0 × I_{SET})
Instant operation time	
Instant operation time >1.05 × I_{SET}	<40 ms (Harmonic blocking active)
Instant operation time >3.00 × I_{SET}	<30 ms (Harmonic blocking active)
Reset	
Reset ratio: differential current	97 % of the differential current setting (typically)
Reset time	<45 ms

9.2.1.2 Non-directional overcurrent protection (I>; 50/51)

Table. 9.2.1.2 - 498. Technical data for the non-directional overcurrent function.

Measurement inputs	
Current inputs	Phase current inputs: I_{L1} (A), I_{L2} (B), I_{L3} (C)
Current input magnitudes	RMS phase currents TRMS phase currents Peak-to-peak phase currents
Pick-up	
Pick-up current setting	0.10…50.00 × I_n, setting step 0.01 × I_n
Inrush 2nd harmonic blocking	0.10…50.00 %I_{fund}, setting step 0.01 %I_{fund}
Inaccuracy: - Current - 2nd harmonic blocking	 ±0.5 %I_{set} or ±15 mA (0.10…4.0 × I_{set}) ±1.0 %-unit of the 2nd harmonic setting
Operation time	
Definite time function operating time setting	0.000…1800.000 s, setting step 0.005 s
Inaccuracy: - Definite time: I_m/I_{set} ratio > 3 - Definite time: I_m/I_{set} ratio = 1.05…3	 ±1.0 % or ±20 ms ±1.0 % or ±30 ms
IDMT setting parameters: - k Time dial setting for IDMT - A IDMT constant - B IDMT constant - C IDMT constant	 0.01…25.00, step 0.01 0…250.0000, step 0.0001 0…250.0000, step 0.0001 0…250.0000, step 0.0001
Inaccuracy: - IDMT operating time - IDMT minimum operating time	 ±1.5 % or ±20 ms ±20 ms
Retardation time (overshoot)	<30 ms
Instant operation time	
Start time and instant operation time (trip): - I_m/I_{set} ratio = 2 - I_m/I_{set} ratio = 5 - I_m/I_{set} ratio = 10	 Typically 25 ms Typically 16 ms Typically 12 ms
Reset	
Reset ratio	97 % of the pick-up current setting
Reset time setting Inaccuracy: Reset time	0.000…150.000 s, step 0.005 s ±1.0 % or ±50 ms
Instant reset time and start-up reset	<50 ms

NOTICE!
The release delay does <u>not</u> apply to phase-specific tripping!

© Arcteq Relays Ltd
IM00021

9.2.1.3 Non-directional earth fault protection (I0>; 50N/51N)

Table. 9.2.1.3 - 499. Technical data for the non-directional earth fault function.

Measurement inputs	
Current input (selectable)	Residual current channel I_{01} (Coarse) Residual current channel I_{02} (Fine) Calculated residual current: I_{L1} (A), I_{L2} (B), I_{L3} (C)
Current input magnitudes	RMS residual current (I_{01}, I_{02} or calculated I_0) TRMS residual current (I_{01} or I_{02}) Peak-to-peak residual current (I_{01} or I_{02})
Pick-up	
Used magnitude	Measured residual current I01 (1 A) Measured residual current I02 (0.2 A) Calculated residual current I0Calc (5 A)
Pick-up current setting	0.0001…40.00 × I_n, setting step 0.0001 × I_n
Inaccuracy: - Starting I01 (1 A) - Starting I02 (0.2 A) - Starting I0Calc (5 A)	 ±0.5 %$I0_{set}$ or ±3 mA (0.005…10.0 × I_{set}) ±1.5 %$I0_{set}$ or ±1.0 mA (0.005…25.0 × I_{set}) ±1.0 %$I0_{set}$ or ±15 mA (0.005…4.0 × I_{set})
Operating time	
Definite time function operating time setting	0.000…1800.000 s, setting step 0.005 s
Inaccuracy: - Definite time: I_m/I_{set} ratio > 3 - Definite time: I_m/I_{set} ratio = 1.05…3	 ±1.0 % or ±20 ms ±1.0 % or ±30 ms
IDMT setting parameters: - k Time dial setting for IDMT - A, B, C IDMT constants	 0.01…25.00, step 0.01 0…250.0000, step 0.0001
Inaccuracy: - IDMT operating time - IDMT minimum operating time	 ±1.5 % or ±20 ms ±20 ms
Retardation time (overshoot)	<30 ms
Instant operation time	
Start time and instant operation time (trip): - I_m/I_{set} ratio > 3.5 - I_m/I_{set} ratio = 1.05…3.5	 <50 ms (typically 35 ms) <55 ms
Reset	
Reset ratio	97 % of the pick-up current setting
Reset time setting Inaccuracy: Reset time	0.000…150.000 s, step 0.005 s ±1.0 % or ±50 ms
Instant reset time and start-up reset	<50 ms

NOTICE!
The operation and reset time accuracy does not apply when the measured secondary current in I02 is 1…20 mA. The pick-up is tuned to be more sensitive, and the operation times vary because of this.

9.2.1.4 Directional overcurrent protection (Idir>; 67)

Table. 9.2.1.4 - 500. Technical data for the directional overcurrent function.

Input signals	
Current inputs	Phase current inputs: I_{L1} (A), I_{L2} (B), I_{L3} (C)
Current input magnitudes	RMS phase currents TRMS phase currents Peak-to-peak phase currents
Current input calculations	Positive sequence current angle
Voltage inputs	U_{L1}, U_{L2}, U_{L3} U_{L12}, U_{L23}, U_{L31} + U0
Voltage input calculations	Positive sequence voltage angle
Pick-up	
Characteristic direction	Directional, non-directional
Operating sector center	-180.0…180.0 deg, setting step 0.1 deg
Operating sector size (+/-)	1.00…170.00 deg, setting step 0.10 deg
Pick-up current setting	0.10…40.00 × I_n, setting step 0.01 × I_n
Inaccuracy: - Current - U1/I1 angle (U > 15 V) - U1/I1 angle (U = 1…15 V)	 ±0.5 %I_{set} or ±15 mA (0.10…4.0 × I_{set}) ±0.20° ±1.5°
Operation time	
Definite time function operating time setting	0.000…1800.000 s, setting step 0.005 s
Inaccuracy: - Definite time: I_m/I_{set} ratio > 3 - Definite time: I_m/I_{set} ratio = 1.05…3	 ±1.0 % or ±20 ms ±1.0 % or ±35 ms
IDMT setting parameters: - k Time dial setting for IDMT - A IDMT constant - B IDMT constant - C IDMT constant	 0.01…25.00, step 0.01 0…250.0000, step 0.0001 0…250.0000, step 0.0001 0…250.0000, step 0.0001
Inaccuracy: - IDMT operating time - IDMT minimum operating time	 ±1.5 % or ±20 ms ±20 ms
Instant operation time	

© Arcteq Relays Ltd
IM00021

Start time and instant operation time (trip): - I_m/I_{set} ratio > 3 - I_m/I_{set} ratio = 1.05…3	<40 ms (typically 30 ms) <50 ms
Reset	
Reset ratio: - Current - U1/I1 angle	97 % of the pick-up current setting 2.0°
Reset time setting Inaccuracy: Reset time	0.000…150.000 s, step 0.005 s ±1.0 % or ±50 ms
Instant reset time and start-up reset	<50 ms

NOTICE!
The minimum voltage for direction solving is 1.0 V secondary. During three-phase short-circuits the angle memory is active for 0.5 seconds in case the voltage drops below 1.0 V.

9.2.1.5 Directional earth fault protection (I0dir>; 67N/32N)

Table. 9.2.1.5 - 501. Technical data for the directional earth fault function.

Measurement inputs	
Current input (selectable)	Residual current channel I_{01} (Coarse) Residual current channel I_{02} (Fine) Calculated residual current: I_{L1} (A), I_{L2} (B), I_{L3} (C)
Current input magnitudes	RMS residual current (I_{01}, I_{02} or calculated I_0) TRMS residual current (I_{01} or I_{02}) Peak-to-peak residual current (I_{01} or I_{02})
Voltage input (selectable)	Residual voltage from U3 or U4 voltage channel Residual voltage calculated from U_{L1}, U_{L2}, U_{L3}
Voltage input magnitudes	RMS residual voltage U_0 Calculated RMS residual voltage U_0
Pick-up	
Characteristic direction	Unearthed (Varmetric 90°) Petersen coil GND (Wattmetric 180°) *Earthed* (Adjustable sector)
When the *earthed* mode is active: - Tripping area center - Tripping area size (+/-)	0.00…360.00 deg, setting step 0.10 deg 45.00…135.00 deg, setting step 0.10 deg
Pick-up current setting Pick-up voltage setting	0.005…40.00 × I_n, setting step 0.001 × I_n 1.00…75.00 %$U0_n$, setting step 0.01 %$U0_n$

Inaccuracy: - Starting I01 (1 A) - Starting I02 (0.2 A) - Starting I0Calc (5 A) - Voltage U0 and U0Calc - U0/I0 angle (U > 15 V) - U0/I0 angle (U = 1…15 V)	 ±0.5 %$I0_{set}$ or ±3 mA (0.005…10.0 × I_{set}) ±1.5 %$I0_{set}$ or ±1.0 mA (0.005…25.0 × I_{set}) ±1.5 %$I0_{set}$ or ±15 mA (0.005…4.0 × I_{set}) ±1.0 %$U0_{set}$ or ±30 mV ±0.2° (I0Calc ±1.0°) ±1.0°
Operation time	
Definite time function operating time setting	0.000…1800.000 s, setting step 0.005 s
Inaccuracy: - Definite time (I_m/I_{set} ratio 1.05→)	±1.0 % or ±45 ms
IDMT setting parameters: - k Time dial setting for IDMT - A IDMT constant - B IDMT constant - C IDMT constant	 0.01…25.00, step 0.01 0…250.0000, step 0.0001 0…250.0000, step 0.0001 0…250.0000, step 0.0001
Inaccuracy: - IDMT operating time - IDMT minimum operating time	 ±1.5 % or ±25 ms ±20 ms
Instant operation time	
Start time and instant operation time (trip): - I_m/I_{set} ratio > 3 - I_m/I_{set} ratio = 1.05…3	 <55 ms (typically 45 ms) <65 ms
Reset	
Current and voltage reset U0/I0 angle	97 % of the pick-up current and voltage setting 2.0°
Reset time setting Inaccuracy: Reset time	0.000…150.000 s, step 0.005 s ±1.0 % or ±45 ms
Instant reset time and start-up reset	<50 ms

9.2.1.6 Negative sequence overcurrent/ phase current reversal/ current unbalance protection (I2>; 46/46R/46L)

Table. 9.2.1.6 - 502. Technical data for the current unbalance function.

Measurement inputs	
Current inputs	Phase current inputs: I_{L1} (A), I_{L2} (B), I_{L3} (C)
Current input calculations	Positive sequence current (I1) Negative sequence current (I2)
Pick-up	
Used magnitude	Negative sequence component I2pu Relative unbalance I2/I1

© Arcteq Relays Ltd
IM00021

Pick-up setting	0.01…40.00 × I_n, setting step 0.01 × I_n (I2pu) 1.00…200.00 %, setting step 0.01 % (I2/I1)
Minimum phase current (at least one phase above)	0.01…2.00 × I_n, setting step 0.01 × I_n
Inaccuracy: - Starting I2pu - Starting I2/I1	 ±1.0 %-unit or ±100 mA (0.10…4.0 × I_n) ±1.0 %-unit or ±100 mA (0.10…4.0 × I_n)
Operating time	
Definite time function operating time setting	0.000…1800.000 s, setting step 0.005 s
Inaccuracy: - Definite time (I_m/I_{set} ratio > 1.05)	 ±1.5 % or ±60 ms
IDMT setting parameters: - k Time dial setting for IDMT - A IDMT Constant - B IDMT Constant - C IDMT Constant	 0.01…25.00, step 0.01 0…250.0000, step 0.0001 0…250.0000, step 0.0001 0…250.0000, step 0.0001
Inaccuracy: - IDMT operating time - IDMT minimum operating time	 ±2.0 % or ±30 ms ±20 ms
Retardation time (overshoot)	<5 ms
Instant operation time	
Start time and instant operation time (trip): - I_m/I_{set} ratio > 1.05	 <70 ms
Reset	
Reset ratio	97 % of the pick-up setting
Reset time setting Inaccuracy: Reset time	0.000…150.000 s, step 0.005 s ±1.5 % or ±60 ms
Instant reset time and start-up reset	<55 ms

9.2.1.7 Harmonic overcurrent protection (Ih>; 50H/51H/68H)

Table. 9.2.1.7 - 503. Technical data for the harmonic overcurrent function.

Measurement inputs	
Current inputs	Phase current inputs: I_{L1} (A), I_{L2} (B), I_{L3} (C) Residual current channel I_{01} (Coarse) Residual current channel I_{02} (Fine)
Pick-up	
Harmonic selection	2nd, 3rd, 4th, 5th, 6th 7th, 9th, 11th, 13th, 15th, 17th or 19th
Used magnitude	Harmonic per unit (× I_N) Harmonic relative (Ih/IL)

Pick-up setting	0.05…2.00 × I_N, setting step 0.01 × I_N (× I_N) 5.00…200.00 %, setting step 0.01 % (Ih/IL)
Inaccuracy: - Starting × I_N - Starting × Ih/IL	 <0.03 × I_N (2nd, 3rd, 5th) <0.03 × I_N tolerance to Ih (2nd, 3rd, 5th)
Operation time	
Definite time function operating time setting	0.000…1800.000 s, setting step 0.005 s
Inaccuracy: - Definite time (I_M/I_{SET} ratio >1.05)	 ±1.0 % or ±35 ms
IDMT setting parameters: k Time dial setting for IDMT A IDMT constant B IDMT constant C IDMT constant	 0.01…25.00, step 0.01 0…250.0000, step 0.0001 0…250.0000, step 0.0001 0…250.0000, step 0.0001
Inaccuracy: - IDMT operating time - IDMT minimum operating time	 ±1.5 % or ±20 ms ±20 ms
Instant operation time	
Start time and instant operation time (trip): I_M/I_{SET} ratio >1.05	 <50 ms
Reset	
Reset ratio	95 % of the pick-up setting
Reset time setting Inaccuracy: Reset time	0.000…150.000 s, step 0.005 s ±1.0 % or ±35 ms
Instant reset time and start-up reset	<50 ms

NOTICE!
Harmonics generally: The amplitude of the harmonic content must be least 0.02 × I_N when the relative mode (Ih/IL) is used!
Blocking: To achieve fast activation for blocking purposes with the harmonic overcurrent stage, note that the harmonic stage may be activated by a rapid load change or fault situation. An intentional activation lasts for approximately 20 ms if a harmonic component is not present. The harmonic stage stays active if the harmonic content is above the pick-up limit.
Tripping: When using the harmonic overcurrent stage for tripping, please ensure that the operation time is set to 20 ms (DT) or longer to avoid nuisance tripping caused by the above-mentioned reasons.

9.2.1.8 Circuit breaker failure protection (CBFP; 50BF/52BF)

Table. 9.2.1.8 - 504. Technical data for the circuit breaker failure protection function.

Measurement inputs

© Arcteq Relays Ltd
IM00021

Current inputs	Phase current inputs: I_{L1} (A), I_{L2} (B), I_{L3} (C) Residual current channel I_{01} (Coarse) Residual current channel I_{02} (Fine)
Current input magnitudes	RMS phase currents RMS residual current (I_{01}, I_{02} or calculated I_0)
Pick-up	
Monitored signals	Digital input status, digital output status, logical signals
Pick-up current setting: - IL1…IL3 - I01, I02, I0Calc	 0.10…40.00 × I_N, setting step 0.01 × I_N 0.005…40.00 × I_N, setting step 0.005 × I_N
Inaccuracy: - Starting phase current (5A) - Starting I01 (1 A) - Starting I02 (0.2 A) - Starting I0Calc (5 A)	 ±0.5 %I_{SET} or ±15 mA (0.10…4.0 × I_{SET}) ±0.5 %$I0_{SET}$ or ±3 mA (0.005…10.0 × I_{SET}) ±1.5 %$I0_{SET}$ or ±1.0 mA (0.005…25.0 × I_{SET}) ±1.0 %$I0_{SET}$ or ±15 mA (0.005…4.0 × I_{SET})
Operation time	
Definite time function operating time setting	0.050…1800.000 s, setting step 0.005 s
Inaccuracy: - Current criteria (I_M/I_{SET} ratio 1.05→) - DO or DI only	 ±1.0 % or ±55 ms ±15 ms
Reset	
Reset ratio	97 % of the pick-up current setting
Reset time	<50 ms

9.2.1.9 Low-impedance or high-impedance restricted earth fault/ cable end differential protection (I0d>; 87N)

Table. 9.2.1.9 - 505. Technical data for the restricted earth fault/cable end differential function.

Measurement inputs	
Current inputs	Phase current inputs: I_{L1} (A), I_{L2} (B), I_{L3} (C) Residual current channel I_{01} (Coarse) Residual current channel I_{02} (Fine)
Current input calculations	Calculated bias and residual differential currents
Pick-up	
Operating modes	Restricted earth fault Cable end differential
Characteristics	Biased differential with 3 settable sections and 2 slopes
Pick-up current sensitivity setting Slope 1 Slope 2 Bias (Turnpoint 1 & 2)	0.01…50.00 % (I_N), setting step 0.01 % 0.00…150.00 %, setting step 0.01 % 0.00…250.00 %, setting step 0.01 % 0.01…50.00 × I_N, setting step 0.01 × I_N

Inaccuracy - Starting	±3% of the set pick-up value > 0.5 × I_N setting. ±5 mA < 0.5 × I_N setting
Operation time	
Instant operation time 1.05 x I_{SET}	<30 ms
Reset	
Reset ratio	No hysteresis
Reset time	<40 ms

9.2.1.10 Overvoltage protection (U>; 59)

Table. 9.2.1.10 - 506. Technical data for the overvoltage function.

Measurement inputs	
Voltage inputs	U_{L1}, U_{L2}, U_{L3} U_{L12}, U_{L23}, U_{L31} (+ U_0)
Voltage input magnitudes	RMS line-to-line or line-to-neutral voltages
Pick-up	
Pick-up terms	1 voltage 2 voltages 3 voltages
Pick-up setting	1.00…250.00 %U_N, setting step 0.01 %U_N
Inaccuracy: - Voltage	±1.5 %U_{SET}
Operating time	
Definite time function operating time setting	0.000…1800.000 s, setting step 0.005 s
Inaccuracy: - Definite time (U_M/U_{SET} ratio 1.05→)	±1.0 % or ±35 ms
IDMT setting parameters: - k Time dial setting for IDMT - IDMT Multiplier	0.01…60.00, step0.01 0…25.00, step 0.01
Inaccuracy: - IDMT operating time - IDMT minimum operating time	±1.5 % or ±20 ms ±20 ms
Instant operation time	
Start time and instant operation time (trip): - U_M/U_{SET} ratio 1.05→	<50 ms
Reset	
Reset ratio	97 % of the pick-up voltage setting

© Arcteq Relays Ltd
IM00021

Reset time setting Inaccuracy: Reset time	0.000…150.000 s, step 0.005 s ±1.0 % or ±45 ms
Instant reset time and start-up reset	<50 ms

9.2.1.11 Undervoltage protection (U<; 27)

Table. 9.2.1.11 - 507. Technical data for the undervoltage function.

Measurement inputs	
Voltage inputs	U_{L1}, U_{L2}, U_{L3} U_{L12}, U_{L23}, U_{L31} (+ U_0)
Voltage input magnitudes	RMS line-to-line or line-to-neutral voltages
Pick-up	
Pick-up terms	1 voltage 2 voltages 3 voltages
Pick-up setting	0.00…120.00 %U_N, setting step 0.01 %U_N
Inaccuracy: - Voltage	±1.5 %U_{SET} or ±30 mV
Low voltage block	
Pick-up setting	0.00…80.00 %U_N, setting step 0.01 %U_N
Inaccuracy: - Voltage	±1.5 %U_{SET} or ±30 mV
Operation time	
Definite time function operating time setting	0.000…1800.000 s, setting step 0.005 s
Inaccuracy: - Definite time (U_M/U_{SET} ratio 1.05→)	±1.0 % or ±35 ms
IDMT setting parameters: - k Time dial setting for IDMT - IDMT Multiplier	0.01…60.00, step 0.01 0…25.00, step 0.01
Inaccuracy: - IDMT operating time - IDMT minimum operating time	±1.5 % or ±20 ms ±20 ms
Instant operation time	
Start time and instant operation time (trip): - U_M/U_{SET} ratio 1.05→	<65 ms
Retardation time (overshoot)	<30 ms
Reset	
Reset ratio	103 % of the pick-up voltage setting

Reset time setting Inaccuracy: Reset time	0.000…150.000 s, step 0.005 s ±1.0 % or ±45 ms
Instant reset time and start-up reset	<50 ms

NOTICE!
The low-voltage block is not in use when its pick-up setting is set to 0 %. The undervoltage function trip signal is active when the LV block is disabled, and the device has no voltage injection.

NOTICE!
After the low voltage blocking condition, the undervoltage stage does not trip unless the voltage exceeds the pick-up setting first.

9.2.1.12 Neutral overvoltage protection (U0>; 59N)

Table. 9.2.1.12 - 508. Technical data for the neutral overvoltage function.

Measurement inputs	
Voltage input (selectable)	Residual voltage from U3 or U4 voltage channel Residual voltage calculated from U_{L1}, U_{L2}, U_{L3}
Voltage input magnitudes	RMS residual voltage U_0 Calculated RMS residual voltage U_0
Pick-up	
Pick-up voltage setting	1.00…50.00 % $U0_N$, setting step 0.01 × I_N
Inaccuracy: - Voltage U0 - Voltage U0Calc	 ±1.5 %$U0_{SET}$ or ±30 mV ±150 mV
Operation time	
Definite time function operating time setting	0.000…1800.000 s, setting step 0.005 s
Inaccuracy: - Definite time ($U0_M/U0_{SET}$ ratio 1.05→)	 ±1.0 % or ±45 ms
IDMT setting parameters: - k Time dial setting for IDMT - IDMT Multiplier	 0.01…60.00, step 0.01 0…25.00, step 0.01
Inaccuracy: - IDMT operating time - IDMT minimum operating time	 ±1.5 % or ±20 ms ±20 ms
Instant operation time	
Start time and instant operation time (trip): - $U0_M/U0_{SET}$ ratio 1.05→	 <50 ms
Reset	
Reset ratio	97 % of the pick-up voltage setting

© Arcteq Relays Ltd
IM00021

Reset time setting Inaccuracy: Reset time	0.000 … 150.000 s, step 0.005 s ±1.0 % or ±50 ms
Instant reset time and start-up reset	<50 ms

9.2.1.13 Sequence voltage protection (U1/U2>/<; 47/27P/59NP)

Table. 9.2.1.13 - 509. Technical data for the sequence voltage function.

Measurement inputs	
Voltage inputs	U_{L1}, U_{L2}, U_{L3} U_{L12}, U_{L23}, U_{L31} (+ U_0)
Voltage input calculations	Positive sequence voltage (I1) Negative sequence voltage (I2)
Pick-up	
Pick-up setting	5.00…150.00 %U_N, setting step 0.01 %U_N
Inaccuracy: - Voltage	±1.5 %U_{SET} or ±30 mV
Low voltage block	
Pick-up setting	1.00…80.00 %U_N, setting step 0.01 %U_N
Inaccuracy: -Voltage	±1.5 %U_{SET} or ±30 mV
Operation time	
Definite time function operating time setting	0.000…1800.000 s, setting step 0.005 s
Inaccuracy -Definite Time (U_M/U_{SET} ratio 1.05→)	±1.0 % or ±35 ms
IDMT setting parameters: - k Time dial setting for IDMT - IDMT Multiplier	0.01…60.00, step 0.01 0…25.00, step 0.01
Inaccuracy: - IDMT operating time - IDMT minimum operating time	±1.5 % or ±20 ms ±20 ms
Instant operation time	
Start time and instant operation time (trip): - U_M/U_{SET} ratio <0.95/1.05→	<65 ms
Reset	
Reset ratio	97 or 103 % of the pick-up voltage setting
Reset time setting Inaccuracy: Reset time	0.000…150.000 s, step 0.005 s ±1.0 % or ±35 ms
Instant reset time and start-up reset	<50 ms

9.2.1.14 Overfrequency and underfrequency protection (f>/<; 81O/81U)

Table. 9.2.1.14 - 510. Technical data for the overfrequency and underfrequency function.

Input signals	
Sampling mode	Fixed Tracking
Frequency reference 1 Frequency reference 2 Frequency reference 3	CT1IL1, CT2IL1, VT1U1, VT2U1 CT1IL2, CT2IL2, VT1U2, VT2U2 CT1IL3, CT2IL3, VT1U3, VT2U3
Pick-up	
f> pick-up setting f< pick-up setting	10.00…70.00 Hz, setting step 0.01 Hz 7.00…65.00 Hz, setting step 0.01 Hz
Inaccuracy (sampling mode): - Fixed - Tracking	±20 mHz (50/60 Hz fixed frequency) ±20 mHz (U > 30 V secondary) ±20 mHz (I > 30 % of rated secondary)
Operation time	
Definite time function operating time setting	0.000…1800.000 s, setting step 0.005 s
Inaccuracy: - Definite time (I_M/I_{SET} ratio +/- 50 mHz)	±1.5 % or ±50 ms (max. step size: 100 mHz)
Instant operation time	
Start time and instant operation time (trip): - I_M/I_{SET} ratio +/- 50 mHz (Fixed) - I_M/I_{SET} ratio +/- 50 mHz (Tracking)	<70 ms (max. step size: 100 mHz) <3 cycles or <60 ms (max. step size: 100 mHz)
Reset	
Reset ratio	0.020 Hz
Instant reset time and start-up reset: - I_M/I_{SET} ratio +/- 50 mHz (Fixed) - I_M/I_{SET} ratio +/- 50 mHz (Tracking)	<110 ms (max. step size: 100 mHz) <3 cycles or <70 ms (max. step size: 100 mHz)

NOTICE!
Measuring frequency requires that the secondary voltage exceeds 2 volts, or the current exceeds 0.25 amperes (peak-to peak).

NOTICE!
The frequency is measured two seconds after a signal is received.

9.2.1.15 Rate-of-change of frequency protection (df/dt>/<; 81R)

Table. 9.2.1.15 - 511. Technical data for the rate-of-change of frequency function.

Input signals

© Arcteq Relays Ltd
IM00021

Sampling mode	Fixed Tracking
Frequency reference 1 Frequency reference 2 Frequency reference 3	CT1IL1, CT2IL1, VT1U1, VT2U1 CT1IL2, CT2IL2, VT1U2, VT2U2 CT1IL3, CT2IL3, VT1U3, VT2U3
Pick-up	
df/dt >/< pick-up setting	0.15…1.00 Hz/s, setting step 0.01 Hz
f> limit	10.00…70.00 Hz, setting step 0.01 Hz
f< limit	7.00…65.00 Hz, setting step 0.01 Hz
Pick-up inaccuracy	
- df/dt	±5.0 %I_{SET} or ±20 mHz/s
- frequency	±15 mHz (U > 30 V secondary) ±20 mHz (I > 30 % of rated secondary)
Operation time	
Definite time function operating time setting	0.000…1800.000 s, setting step 0.005 s
Inaccuracy: - Definite time (I_M/I_{SET} ratio +/- 50 mHz)	±1.5 % or ±110 ms (max. step size: 100 mHz)
Start time and instant operation time (trip):	
- f_M/f_{SET} ratio +/- 20 mHz (overreach)	<200 ms
- f_M/f_{SET} ratio +/- 200 mHz (overreach)	<90 ms
Reset	
f< and f> frequency limit	±0.020 Hz
df/dt	±10.0 % of pick-up or 50 mHz/s
Instant reset time and start-up reset: - f_M/f_{SET} ratio +/- 50 mHz	<325 ms (max. step size: 100 mHz)

NOTICE!
Frequency is measured two seconds after a signal is received.

9.2.1.16 Power protection (P, Q, S>/<; 32)

Table. 9.2.1.16 - 512. Technical data for the power protection function.

Measurement inputs	
Current inputs	Phase current inputs: I_{L1} (A), I_{L2} (B), I_{L3} (C)
Voltage inputs	U_{L1}, U_{L2}, U_{L3} U_{L12}, U_{L23}, U_{L31} (+ U_0)

Calculated measurements	Three-phase active, reactive or apparent power (P, Q or S) value based on the chosen or set nominal amplitude.
Pick-up	
Comparator selection	> or <
> or <	-500.000...500.000 %/MVA_N, setting step 0.005 %/MVA_N
Inaccuracy: - Active, reactive, or apparent power	Typically <1.0 %P_{SET}
Operation time	
Definite time function operating time setting	0.000…1800.000 s, setting step 0.005 s
Inaccuracy: - Definite time (P_M/P_{SET} ratio 1.05→)	±1.0 % or ±35 ms
Instant operation time	
Start time and instant operation time (trip): - PQS_M/PQS_{SET} ratio 1.05→	<40 ms
Reset	
Reset ratio	97 or 103 %P_{SET}
Instant reset time and start-up reset	<40 ms

9.2.1.17 Motor start/ locked rotor monitoring (Ist>; 48/14)

Table. 9.2.1.17 - 513. Technical data for the motor start/locked rotor monitoring function.

Measurement inputs	
Current inputs	Phase current inputs: I_{L1} (A), I_{L2} (B), I_{L3} (C)
Current input magnitudes	RMS phase currents
Pick-up	
Pick-up current setting	0.10…40.00 × I_N, setting step 0.10 × I_N
Inaccuracy: - Current	±0.5 %I_{SET} or ±15 mA (0.10…4.0 × I_{SET})
Time settings	
Starting time setting	0.000…1800.000 s, setting step 0.005 s
Operating mode	Definite time or cumulative I2t sum inverse operating time With or without a speed switch input Monitors only starts or both starts and stall

© Arcteq Relays Ltd
IM00021

Start time	Max. 5 ms from the detected start-up or locked rotor situation
Inaccuracy: - Starting - Definite time operating time	±3% of the set pick-up value > 0.5 × I_N setting. 5 mA < 0.5 × I_N setting ±0.5 % or ±10 ms
Operation time	
Definite time function operating time setting	0.000…1800.000 s, setting step 0.005 s
Cumulative I2t sum inverse operation time	0.000…1800.000 s, setting step 0.005 s
Inaccuracy: - Definite time (I_M/I_{SET} ratio 0.95)	±1.0 % or ±40 ms
Instant operation time	
Start time and instant operation time (trip): - I_M/I_{SET} ratio 1.05→	<55 ms
Reset	
Reset ratio	97 % of the pick-up current setting
Reset time setting Inaccuracy: Reset time	0.000 …150.000 s, step 0.005 s ±1.0 % or ±35 ms
Instant reset time and start-up reset	<55 ms

9.2.1.18 Machine thermal overload protection (TM>; 49M)

Table. 9.2.1.18 - 514. Technical data for the machine thermal overload protection function.

Measurement inputs	
Current inputs	Phase current inputs: I_{L1} (A), I_{L2} (B), I_{L3} (C)
Current input magnitudes	TRMS phase currents (up to the 31st harmonic)
Pick-up (Heating)	
NPS bias factor (unbalance effect) Pick-up current setting Thermal alarm and trip level setting range Motor service factor	0.1…10.0, setting step 0.1 0.10…40.00 × I_N, setting step 0.01 × I_N 0.0…150.0 %, setting step 0.1 % 0.01…5.00 × I_N, setting step 0.01 × I_N
Cold condition: - Long heat T const (cold) - Short heat T const (cold)	0.0…500.0 min, setting step 0.1 min 0.0…500.0 min, setting step 0.1 min
Hot condition: - Long heat T const (hot) - Short heat T const (hot) - Hot condition theta limit (Cold → Hot spot)	0.0…500.0 min, setting step 0.1 min 0.0…500.0 min, setting step 0.1 min 0.00…100.00 %, setting step 0.01 %
Reset (Cooling)	

Reset ratio (pick-up and alarms)	99 %
Stop condition: - Long cool T const (stop) - Short cool T const (stop) - Short cool T in use time	 0.0…500.0 min, setting step 0.1 min 0.0…500.0 min, setting step 0.1 min 0.0…3000.0 min, setting step 0.1 min
Run condition: - Long cool T const (stop)	 0.0…500.0 min, setting step 0.1 min
Operation time	
Definite time function operating time setting	0.0…3600.0 s, setting step 0.1 s
Inaccuracy: - Pick-up and reset	 ±1.0 % or ±500 ms
Environmental settings	
Thermal replica temperature estimates	Selectable between °C and °F
Ambient temperature effect k min. and max. range Ambient temperature min. and max. range	Linear or manually set curve 0.01...5.00 × I_N, setting step 0.01 × I_N –60…500 deg, setting step 1 deg
Thermal model biasing (ambient): - Set ambient temperature - RTD	 –60…500 deg, setting step 1 deg Used measured ambient value

9.2.1.19 Frequent start protection (N>; 66)

Table. 9.2.1.19 - 515. Technical data for the frequent start protection function.

Inputs	
Input magnitudes	Motor start monitor set start signals
Dependent on the motor thermal status	Yes
Settings	
Starts when cold	1…100 starts, step 1 start
Starts when hot	1…100 starts, step 1 start
Output data	
Monitor data	- Used starts - Available starts - Alarms, inhibits, blocks - Inhibit, alarm time on - Time since last start
Operation	
Start time	Max. 5 ms from the detected start-up
Inaccuracy	

© Arcteq Relays Ltd
IM00021

Starting	±3% of the set pick-up value > 0.5 × I_N setting. 5 mA < 0.5 × I_N setting (from the motor start/locked rotor monitoring function)
Definite time operating time	±0.5 % or ±10 ms of the counter deduct

9.2.1.20 Non-directional undercurrent protection (I<; 37)

Table. 9.2.1.20 - 516. Technical data for the undercurrent function.

Measurement inputs	
Current inputs	Phase current inputs: I_{L1} (A), I_{L2} (B), I_{L3} (C)
Current input magnitudes	RMS phase currents
Pick-up	
Pick-up current setting	0.10…40.00 × I_N, setting step 0.10 × I_N
Inaccuracy: - Current	±0.5 %I_{SET} or ±15 mA (0.10…4.0 × I_{SET})
Operation time	
Definite time function operating time setting	0.00…150.00 s, setting step 0.005 s
Inaccuracy: - Definite time (I_M/I_{SET} ratio 0.95)	±1.0 % or ±30 ms
Instant operation time	
Start time and instant operation time (trip): - I_M/I_{SET} ratio <0.95	<50 ms
Reset	
Reset ratio	103 % of the pick-up current setting
Reset time setting Inaccuracy: Reset time	0.000…150.000 s, step 0.005 s ±1.0 % or ±35 ms
Instant reset time and start-up reset	<50 ms

9.2.1.21 Mechanical jam protection (Im>; 51M)

Table. 9.2.1.21 - 517. Technical data for the mechanical jam function.

Measurement inputs	
Current inputs	Phase current inputs: I_{L1} (A), I_{L2} (B), I_{L3} (C)
Current input magnitudes	RMS phase currents
Pick-up	
Pick-up current setting	0.10…40.00 × I_N, setting step 0.10 × I_N

Inaccuracy: - Current	±0.5 %I_{SET} or ±15 mA (0.10…4.0 × I_{SET})
Operation time	
Definite time function operating time setting	0.000…1800.000 s, setting step 0.005 s
Inaccuracy: - Definite time (I_M/I_{SET} ratio 0.95)	±1.0 % or ±30 ms
Instant operation time	
Start time and instant operation time (trip): - I_M/I_{SET} ratio 1.05→	<50 ms
Reset	
Reset ratio	97 % of the pick-up current setting
Reset time setting Inaccuracy: Reset time	0.000…150.000 s, step 0.005 s ±1.0 % or ±35 ms
Instant reset time and start-up reset	<50 ms

NOTICE!
Mechanical jam protection requires that the motor running condition has been met before tripping is possible.

9.2.1.22 Underimpedance protection (Z<; 21U)

Table. 9.2.1.22 - 518. Technical data for the underimpedance function.

Measurement inputs	
Current inputs	Phase current inputs: I_{L1} (A), I_{L2} (B), I_{L3} (C)
Voltage inputs	U_{L1}, U_{L2}, U_{L3} U_{L12}, U_{L23}, U_{L31} + U_0
Calculated impedances	Phase-to-phase impedances Phase-to-ground impedances Positive sequence impedance
Pick-up	
Pick-up setting	0.1…150.0 Ω, setting step 0.1 Ω
Inaccuracy: - Impedance calculation	Typically <1.0 %Z_{SET}
Operation time	
Definite time function operating time setting	0.000…1800.000 s, setting step 0.005 s
Inaccuracy: - Definite time (Z_M/Z_{SET} ratio <0.95)	±1.0 % or ±25 ms
Instant operation time	

© Arcteq Relays Ltd
IM00021

Start time and instant operation time (trip): - Z_M/Z_{SET} ratio <0.95	<45 ms
Reset	
Reset ratio	103 %Z_{SET}
Reset time setting Inaccuracy: Reset time	0.000…150.000 s, step 0.005 s ±1.0 % or ±25 ms
Instant reset time and start-up reset	<45 ms

9.2.1.23 Voltage-restrained overcurrent protection (Iv>; 51V)

Table. 9.2.1.23 - 519. Technical data for the voltage-restrained overcurrent protection function.

Measurement inputs	
Current inputs	Phase current inputs: I_{L1} (A), I_{L2} (B), I_{L3} (C)
Current input magnitudes	RMS phase currents
Voltage inputs	U_{L1}, U_{L2}, U_{L3} U_{L12}, U_{L23}, U_{L31} + U_0
Voltage input calculation	Positive sequence voltage
Pick-up	
Pick-up current setting (point 1 & 2)	0.10…40.00 × I_N, setting step 0.01 × I_N
Pick-up voltage setting (point 1 & 2)	0.05…150.00 %U_N, setting step 0.01 %U_N
Inaccuracy: - Current - Voltage	±0.5 %I_{SET} or ±15 mA (0.10…4.0 × I_{SET}) ±1.5 %U_{SET} or ±30 mV
Operation time	
Definite time function operating time setting	0.000…1800.000 s, setting step 0.005 s
Inaccuracy: - Definite time (I_M/I_{SET} ratio 1.05→)	±1.0 % or ±25 ms
IDMT setting parameters: k Time dial setting for IDMT A IDMT constant B IDMT constant C IDMT constant	 0.01…25.00, step 0.01 0…250.0000, step 0.0001 0…250.0000, step 0.0001 0…250.0000, step 0.0001
Inaccuracy: - IDMT operating time - IDMT minimum operating time	 ±1.5 % or ±20 ms ±20 ms
Instant operation time	
Start time and instant operation time (trip): - I_M/I_{SET} ratio 1.05→	<40 ms
Reset	

Reset ratio: - Current	97 % of the pick-up current setting
Reset time setting Inaccuracy: Reset time	0.000…150.000 s, step 0.005 s ±1.0 % or ±25 ms
Instant reset time and start-up reset	<45 ms

9.2.1.24 Power factor protection (PF<; 55)

Table. 9.2.1.24 - 520. Technical data for the power factor protection function.

Measurement inputs	
Current inputs	Phase current inputs: I_{L1} (A), I_{L2} (B), I_{L3} (C)
Voltage inputs	U_{L1}, U_{L2}, U_{L3} U_{L12}, U_{L23}, U_{L31} (+ U_0)
Calculated measurement	Three-phase power factor
Pick-up	
Pick-up setting	0.00…0.99, setting step 0.01
Inaccuracy: - power factor (when U > 1.0 V and I > 0.1 A)	±0.001
Operation time	
Definite time function operating time setting	0.000…1800.000 s, setting step 0.005 s
Inaccuracy: - Definite time (at least 0.01 below the setting)	±1.0 % or ±30 ms
Instant operation time	
Start time and instant operation time (trip): - at least 0.01 below the setting	<50 ms
Reset	
Reset ratio	1.03 of the power factor setting
Reset time	<50 ms

NOTICE!
The minimum voltage for the power factor calculation is 1.0 V secondary and the minimum current is 0.1 A secondary.

9.2.1.25 Volts-per-hertz overexcitation protection (V/Hz>; 24)

Table. 9.2.1.25 - 521. Technical data for the volts-per-hertz overexcitation protection function.

Measurement inputs

© Arcteq Relays Ltd
IM00021

Voltage input	U_{L1}, U_{L2}, U_{L3} U_{L12}, U_{L23}, U_{L31}
Voltage input magnitude	Maximum line-to-line voltage
Frequency reference 1 Frequency reference 2 Frequency reference 3	CT1IL1, CT2IL1, VT1U1, VT2U1 CT1IL2, CT2IL2, VT1U2, VT2U2 CT1IL3, CT2IL3, VT1U3, VT2U3
Pick-up	
Pick-up setting	0.01…75.00 %, setting step 0.01 %
Inaccuracy: - V/Hz	±1.0 %
Operation time	
Definite time function operating time setting	0.000…1800.000 s, setting step 0.005 s
Inaccuracy: - Definite time (VHZ_M/VHZ_{SET} ratio 1.05)	±1.0 % or ±25 ms
Instant operation time	
Start time and instant operation time (trip): - VHZ_M/VHZ_{SET} ratio 1.05)	<40 ms
Reset	
Reset ratio	97 % of the pick-up setting
Reset time setting Inaccuracy: Reset time	0.000…150.000 s, step 0.005 s ±1.0 % or ±25 ms
Instant reset time and start-up reset	<40 ms

9.2.1.26 Underexcitation protection (Q<; 40)

Table. 9.2.1.26 - 522. Technical data for the underexcitation protection function.

Measurement inputs	
Current inputs	Phase current inputs: I_{L1} (A), I_{L2} (B), I_{L3} (C)
Voltage inputs	U_{L1}, U_{L2}, U_{L3} U_{L12}, U_{L23}, U_{L31} + U_0
Calclucated measurements	Three-phase reactive power
Pick-up	
Pick-up setting	-1 000 000.00…0.00 kVar, setting step 0.01 kVar
Inaccuracy: - Reactive power	Typically <1.0 %Q_{SET}
Operation time	
Definite time function operating time setting	0.000…1800.000 s, setting step 0.005 s

Inaccuracy: - Definite time (Q_M/Q_{SET} ratio 1.05→)	±1.0 % or ±35 ms
Instant operation time	
Start time and instant operation time (trip): - Q_M/Q_{SET} ratio <0.95	<50 ms
Reset	
Reset ratio	97 % of the set pick-up value
Reset time setting Inaccuracy: Reset time	0.000…150.000 s, step 0.005 s ±1.0 % or ±35 ms
Instant reset time and start-up reset	<50 ms

NOTICE!
Voltage measurement starts from 0.5 V and current measurement from 50 mA. If either or both are missing the reactive power measurement is 0 kVar.

9.2.1.27 Resistance temperature detectors (RTD)

Table. 9.2.1.27 - 523. Technical data of the resistance temperature detectors.

Inputs	
Resistance input magnitudes	Measured temperatures measured by RTD sensors
RTD channels	12 individual RTD channels
Settable alarms	24 alarms available (two per each RTD channel)
Pick-up	
Alarm setting range Inaccuracy Reset ratio	101.00…2000.00 deg, setting step 0.1 deg (either < or > setting) ±3 % of the set pick-up value 97 % of the pick-up setting
Operation	
Operating time	Typically <500 ms

9.2.1.28 Arc fault protection (IArc>/I0Arc>; 50Arc/50NArc) (optional)

Table. 9.2.1.28 - 524. Technical data for the arc fault protection function.

Measurement inputs	
Current inputs	Phase current inputs: I_{L1} (A), I_{L2} (B), I_{L3} (C) Residual current channel I_{01} (Coarse) Residual current channel I_{02} (Fine)
Current input magnitudes	Sample-based phase current measurement Sample-based residual current measurement

© Arcteq Relays Ltd
IM00021

Arc point sensor inputs	Channels S1, S2, S3, S4 (pressure and light sensor, or light-only sensor) Up to three (3) sensors per channel
System frequency operating range	6.00…75.00 Hz
Pick-up	
Pick-up current setting (phase current) Pick-up current setting (residual current) Pick-up light intensity	0.05…40.00 × I_N, setting step 0.01 × I_N 0.05…40.00 × I_N, setting step 0.01 × I_N 8, 25 or 50 kLx (the sensor is selected in the order code)
Starting inaccuracy (IArc> and I0Arc>)	±3 % of the set pick-up value > 0.5 × I_N setting. 5 mA < 0.5 × I_N setting.
Point sensor detection radius	180 degrees
Operation time	
Light only: - Semiconductor outputs HSO1 and HSO2 - Regular relay outputs	Typically 7 ms (3…12 ms) Typically 10 ms (6.5…15 ms)
Light + current criteria (zone 1…4): - Semiconductor outputs HSO1 and HSO2 - Regular relay outputs	Typically 10 ms (6.5…14 ms) Typically 14 ms (10…18 ms)
Arc BI only: - Semiconductor outputs HSO1 and HSO2 - Regular relay outputs	Typically 7 ms (2…12 ms) Typically 10 ms (6.5…15 ms)

9.2.2 Control functions

9.2.2.1 Setting group selection

Table. 9.2.2.1 - 525. Technical data for the setting group selection function.

Settings and control modes	
Setting groups	8 independent, control-prioritized setting groups
Control scale	Common for all installed functions which support setting groups
Control mode	
Local	Any binary signal available in the device
Remote	Force change overrule of local controls either from the setting tool, HMI or SCADA
Operation time	
Reaction time	<5 ms from receiving the control signal

9.2.2.2 Object control and monitoring

Table. 9.2.2.2 - 526. Technical data for the object control and monitoring function.

General	
Number of objects	10
Supported object types	Circuit breaker Circuit breaker with withdrawable cart Disconnector (MC) Disconnector (GND) Custom object image
Signals	
Input signals	Digital inputs Software signals
Output signals	Close command output Open command output
Operation time	
Breaker traverse time setting	0.02…500.00 s, setting step 0.02 s
Max. close/open command pulse length	0.02…500.00 s, setting step 0.02 s
Control termination time out setting	0.02…500.00 s, setting step 0.02 s
Inaccuracy: - Definite time operating time	±0.5 % or ±10 ms
Breaker control operation time	
External object control time	<75 ms
Object control during auto-reclosing	See the technical sheet for the auto-reclosing function.

Table. 9.2.2.2 - 527. Technical data for the circuit breaker wear monitoring function.

Pick-up	
Breaker characteristics settings: - Nominal breaking current - Maximum breaking current - Operations with nominal current - Operations with maximum breaking current	 0.00…100.00 kA, setting step 0.001 kA 0.00…100.00 kA, setting step 0.001 kA 0…200 000 operations, setting step 1 operation 0…200 000 operations, setting step 1 operation
Pick-up setting for Alarm 1 and Alarm 2	0…200 000 operations, setting step 1 operation
Inaccuracy	
Inaccuracy for current/operations counter: - Current measurement element - Operation counter	 $0.1\times I_N > I < 2 \times I_N$ ±0.2 % of the measured current, rest 0.5 % ±0.5 % of operations deducted

© Arcteq Relays Ltd
IM00021

9.2.2.3 Indicator object monitoring

Table. 9.2.2.3 - 528. Technical data for the indicator object monitoring function.

General	
Number of objects	10
Supported object types	Disconnector (GND) Custom object image
Signals	
Input signals	Digital inputs Software signals

9.2.3 Monitoring functions

9.2.3.1 Current transformer supervision

Table. 9.2.3.1 - 529. Technical data for the current transformer supervision function.

Measurement inputs	
Current inputs	Phase current inputs: I_{L1} (A), I_{L2} (B), I_{L3} (C) Residual current channel I_{01} (Coarse) (optional) Residual current channel I_{02} (Fine) (optional)
Current input magnitudes	RMS phase currents RMS residual current (I_{01}, I_{02}) (optional)
Pick-up	
Pick-up current settings: - I_{SET} high limit - I_{SET} low limit - I_{SUM} difference - I_{SET} ratio - I2/I1 ratio	 0.10…40.00 × I_N, setting step 0.01 × I_N 0.10…40.00 × I_N, setting step 0.01 × I_N 0.10…40.00 × I_N, setting step 0.01 × I_N 0.01…100.00 %, setting step 0.01 % 0.01…100.00 %, setting step 0.01 %
Inaccuracy: - Starting IL1, IL2, IL3 - Starting I2/I1 - Starting I01 (1 A) - Starting I02 (0.2 A)	 ±0.5 %I_{SET} or ±15 mA (0.10…4.0 × I_{SET}) ±1.0 %$I2_{SET}$ / $I1_{SET}$ or ±100 mA (0.10…4.0 × I_N) ±0.5 %$I0_{SET}$ or ±3 mA (0.005…10.0 × I_{SET}) ±1.5 %$I0_{SET}$ or ±1.0 mA (0.005…25.0 × I_{SET})
Time delay for alarm	
Definite time function operating time setting	0.000…1800.000 s, setting step 0.005 s
Inaccuracy_ - Definite time (I_M/I_{SET} ratio > 1.05)	 ±2.0 % or ±80 ms
Instant operation time (alarm): - I_M/I_{SET} ratio > 1.05	 <80 ms
Reset	

Reset ratio	97/103 % of the pick-up current setting
Instant reset time and start-up reset	<80 ms

9.2.3.2 Voltage transformer supervision (60)

Table. 9.2.3.2 - 530. Technical data for the voltage transformer supervision function.

Measurement inputs	
Voltage inputs	U_{L1}, U_{L2}, U_{L3} U_{L12}, U_{L23}, U_{L31}
Voltage input magnitudes	RMS line-to-line or line-to-neutral voltages
Pick-up	
Pick-up settings: - Voltage (low pick-up) - Voltage (high pick-up) - Angle shift limit	 0.05…0.50 × U_N, setting step 0.01 × U_N 0.50…1.10 × U_N, setting step 0.01 × U_N 2.00…90.00 deg, setting step 0.10 deg
Inaccuracy: - Voltage - U angle (U> 1 V)	 ±1.5 %U_{SET} ±1.5°
External line/bus side pick-up (optional)	0 → 1
Time delay for alarm	
Definite time function operating time setting	0.000…1800.000 s, setting step 0.005 s
Inaccuracy: - Definite time (U_M/U_{SET} ratio > 1.05/0.95)	 ±1.0 % or ±35 ms
Instant operation time (alarm): - U_M/U_{SET} ratio > 1.05/0.95	 <80 ms
VTS MCB trip bus/line (external input)	<50 ms
Reset	
Reset ratio	97/103 % of the pick-up voltage setting
Reset time setting Inaccuracy: Reset time	0.000…150.000 s, step 0.005 s ±2.0 % or ±80 ms
Instant reset time and start-up reset	<50 ms
VTS MCB trip bus/line (external input)	<50 ms

NOTICE!
When turning on the auxiliary power of a device, the normal condition of a stage has to be fulfilled before tripping.

© Arcteq Relays Ltd
IM00021

9.2.3.3 Circuit breaker wear monitoring

Table. 9.2.3.3 - 531. Technical data for the circuit breaker wear monitoring function.

Pick-up	
Breaker characteristics settings: - Nominal breaking current - Maximum breaking current - Operations with nominal current - Operations with maximum breaking current	 0.00…100.00 kA, setting step 0.001 kA 0.00…100.00 kA, setting step 0.001 kA 0…200 000 operations, setting step 1 operation 0…200 000 operations, setting step 1 operation
Pick-up setting for Alarm 1 and Alarm 2	0…200 000 operations, setting step 1 operation
Inaccuracy	
Inaccuracy for current/operations counter: - Current measurement element - Operation counter	 0.1× I_N > I < 2 × I_N ±0.2 % of the measured current, rest 0.5 % ±0.5 % of operations deducted

9.2.3.4 Current total harmonic distortion

Table. 9.2.3.4 - 532. Technical data for the total harmonic distortion function.

Input signals	
Current inputs	Phase current inputs: I_{L1} (A), I_{L2} (B), I_{L3} (C) Residual current channel I_{01} (Coarse) Residual current channel I_{02} (Fine)
Current input magnitudes	Current measurement channels (FFT result) up to the 31st harmonic component.
Pick-up	
Operating modes	Power THD Amplitude THD
Pick-up setting for all comparators	0.10…200.00 % , setting step 0.01 %
Inaccuracy	±3 % of the set pick-up value > 0.5 × I_N setting; 5 mA < 0.5 × I_N setting.
Time delay	
Definite time function operating time setting for all timers	0.000…1800.000 s, setting step 0.005 s
Inaccuracy: - Definite time operating time - Instant operating time, when I_M/I_{SET} ratio > 3 - Instant operating time, when I_M/I_{SET} ratio 1.05 < I_M/I_{SET} < 3	 ±0.5 % or ±10 ms Typically <20ms Typically <25 ms
Reset	
Reset time	Typically <10 ms

Reset ratio	97 %

9.2.3.5 Event logger

Table. 9.2.3.5 - 533. Technical data for the event logger function.

General information	
Event history capacity	15 000 events
Event timestamp resolution	1 ms

9.2.3.6 Disturbance recorder

Table. 9.2.3.6 - 534. Technical data for the disturbance recorder function.

Recorded values	
Recorder analog channels	0…20 channels Freely selectable
Recorder digital channels	0…96 channels Freely selectable analog and binary signals 1 ms or 5 ms sample rate (FFT)
Performance	
Sample rate	8, 16, 32 or 64 samples/cycle
Recording length	0.000…1800.000 s, setting step 0.001 s The maximum length is determined by the chosen signals.
Number of recordings	0…100, 60 MB of shared flash memory reserved The maximum number of recordings according to the chosen signals and operation time setting combined

9.3 Tests and environmental

Electrical environment compatibility

Table. 9.3 - 535. Disturbance tests.

All tests	CE-approved and tested according to EN 60255-26
Emissions	
Conducted emissions: EN 60255-26 Ch. 5.2, CISPR 22	150 kHz…30 MHz
Radiated emissions: EN 60255-26 Ch. 5.1, CISPR 11	30…1 000 MHz
Immunity	

© Arcteq Relays Ltd
IM00021

Electrostatic discharge (ESD): EN 60255-26, IEC 61000-4-2	Air discharge 15 kV Contact discharge 8 kV
Electrical fast transients (EFT): EN 60255-26, IEC 61000-4-4	Power supply input 4 kV, 5/50 ns, 5 kHz Other inputs and outputs 4 kV, 5/50 ns, 5 kHz NOTE: Shielded cable required for ethernet communication
Surge: EN 60255-26, IEC 61000-4-5	Between wires: 2 kV, 1.2/50 µs Between wire and earth: 4 kV, 1.2/50 µs
Radiated RF electromagnetic field: EN 60255-26, IEC 61000-4-3	f = 80…1 000 MHz, 10 V/m
Conducted RF field: EN 60255-26, IEC 61000-4-6	f = 150 kHz…80 MHz, 10 V (RMS)

Table. 9.3 - 536. Voltage tests.

Dielectric voltage test	
EN 60255-27, IEC 60255-5, EN 60255-1	2 kV, 50 Hz, 1 min
Impulse voltage test	
EN 60255-27, IEC 60255-5	5 kV, 1.2/50 µs, 0.5 J

Physical environment compatibility

Table. 9.3 - 537. Mechanical tests.

Vibration test	
EN 60255-1, EN 60255-27, IEC 60255-21-1	2…13.2 Hz, ± 3.5 mm 13.2…100 Hz, ± 1.0 g
Shock and bump test	
EN 60255-1, EN 60255-27, IEC 60255-21-2	20 g, 1 000 bumps/dir.

Table. 9.3 - 538. Environmental tests.

Damp heat (cyclic)	
EN 60255-1, IEC 60068-2-30	Operational: +25…+55 °C, 93…97 % (RH), 12+12h
Dry heat	
EN 60255-1, IEC 60068-2-2	Storage: +70 °C, 16 h Operational: +55 °C, 16 h
Cold test	
EN 60255-1, IEC 60068-2-1	Storage: –40 °C, 16 h Operational: –20 °C, 16 h

Table. 9.3 - 539. Environmental conditions.

IP classes	
Casing protection class	IP54 (front) IP21 (rear)
Temperature ranges	
Ambient service temperature range	–35…+70 °C
Transport and storage temperature range	–40…+70 °C
Other	
Altitude	<2000 m
Overvoltage category	III
Pollution degree	2

Casing and package

Table. 9.3 - 540. Dimensions and weight.

Without packaging (net)	
Dimensions	Height: 208 mm Width: 257 mm (½ rack) Depth: 165 mm (no cards or connectors)
Weight	Appr. 3.4 kg
With packaging (gross)	
Dimensions	Height: 250 mm Width: 343 mm Depth: 256 mm
Weight	Appr. 4 kg

© Arcteq Relays Ltd
IM00021

10 Ordering information

AQ - M 2 5 7 X - P X X X A X A - X X X X X X X X X

Model
- **M** Motor Protection

Device size
- **5** 1/2 of 19" rack

Analog measurement
- **7** 10 Current measurement channels and 4 voltage measurement channel

Functionality package
- **A** Asynchronous machine
- **B** Synchronous machine
- **C** Synchronous machine with excitation ***

Mounting
- **P** Panel mounting

Auxiliary voltage
- **H** 88...265 VAC/DC
- **L** 18...72 VDC

Measurement accuracy
- **0** Power/Energy measurement accuracy 0.5%
- **2** Power/Energy measurement accuracy 0.2%

Terminals
- **A** Standard
- **B** Ring-lug current terminals
- **C** Standard current terminals, spring cage voltage and I/O terminals
- **D** Ring-lug current terminals, spring cage voltage and I/O terminals

Reserved for future use
- **A** N/A

Digital inputs on power supply module
- **A** 3 Digital inputs, 24 V nominal threshold
- **B** 3 Digital inputs, 110 V nominal threshold
- **C** 3 Digital inputs, 220 V nominal threshold

Reserved for future use
- **A** N/A

Slots F, G, H, I, J, K, L, M, N (9 pcs)
- **A** Empty
- **B** 8 Digital inputs
- **C** 5 Output relays (max. 6 pcs)
- **D** Arc protection with 4 point sensor channels, 2 x HSO, 1 x BI (max. 1 pcs)
- **F** 8 x RTD input (max. 2 pcs)
- **G** 2 x RJ-45 100Mb Ethernet & IRIG-B (max. 1 pcs) *
- **H** 2 x ST 100Mb Ethernet & IRIG-B (max. 1 pcs) *
- **I** 4 x mA outputs - 1 x mA input (max. 2 pcs)
- **J** Double LC 100Mb Ethernet (HSR, PRP redundant protocols) (max. 1 pcs) *
- **K** Double RJ45 100Mb Ethernet (HSR, PRP redundant protocols) (max. 1 pcs) *
- **L** RS-232 - Serial fiber (Plastic-Plastic) (max. 1 pcs) *
- **M** RS-232 - Serial fiber (Plastic-Glass) (max. 1 pcs) *
- **N** RS-232 - Serial fiber (Glass-Plastic) (max. 1 pcs) *
- **O** RS-232 - Serial fiber (Glass-Glass) (max. 1 pcs) *
- **Q** 2 x SFP 100Mb Ethernet & IRIG-B (max. 4 pcs) **
- **R** 3 x High-speed high current output (max. 3 pcs)
- **T** 4 x mA inputs - 1 x mA output (max. 2 pcs)

* Can only be applied to the two last slots.
** Can only be applied to the four last slots. Requires an SFP adapter. See "Accessories" list.
*** Requires the AQ-GC30 IGBT rectifier bridge unit

Accessories

Order code	Description	Note
AX007	External 6-channel 2 or 3 wires RTD Input module, pre-configured	Requires an external 24 VDC supply.

AX008	External 8-ch Thermocouple mA Input module, pre-configured	Requires an external 24 VDC supply.
AX020	SFP module LC 2 km multi-mode	2 km multi-mode fiber (1310 nm)
AX021	SFP module LC 40 km single-mode	40 km single-mode fiber (1310 nm)
AX022	SFP module LC 120 km single-mode	120 km single-mode fiber (1550 nm)
AX013	AQ 250 series raising frame 120mm	-
AQX014	AQ 250 series raising frame 40mm	-
AQX015	AQ 250 series wall mounting bracket	-
AQ-01A	Light point sensor unit (8,000 lux threshold)	Max. cable length 200 m
AQ-01B	Light point sensor unit (25,000 lux threshold)	Max. cable length 200 m
AQ-01C	Light point sensor unit (50,000 lux threshold)	Max. cable length 200 m
AQ-02A	Pressure and light point sensor unit (8,000 lux threshold)	Max. cable length 200 m
AQ-02B	Pressure and light point sensor unit (25,000 lux threshold)	Max. cable length 200 m
AQ-02C	Pressure and light point sensor unit (50,000 lux threshold)	Max. cable length 200 m

© Arcteq Relays Ltd

11 Contact and reference information

Manufacturer

Arcteq Relays Ltd.

Visiting and postal address

Kvartsikatu 2 A 1
65300 Vaasa, Finland

Contacts

Phone:	+358 10 3221 370
Website:	arcteq.com
Technical support:	support.arcteq.fi +358 10 3221 388 (EET 9:00 – 17.00)
E-mail (sales):	sales@arcteq.com