ARCTEQ
PART OF ENSTO GROUP

AQ-F215

Feeder protection device

Instruction manual

Table of contents

1 Document information 6
1.1 Version 2 revision notes 6
1.2 Version 1 revision notes 9
2 Abbreviations 12
3 General 14
4 Device user interface 15
4.1 Panel structure 15
4.2 Local panel structure 15
4.3 Mimic and main menu 16
4.3.1 Basic configuration 16
4.3.2 Navigation in the main configuration menus 17
4.4 General menu 17
4.5 Protection menu 21
4.6 Control menu 27
4.7 Communication menu 42
4.8 Measurement menu 45
4.9 Monitoring menu 51
4.10 Configuring user levels and their passwords 54
5 Functions 57
5.1 Functions included 57
5.1.1 Functions included in AQ-F215 57
5.2 Measurements 59
5.2.1 Current measurement and scaling 59
5.2.2 Power and energy calculation 74
5.2.3 Frequency tracking and scaling 83
5.3 General menu 86
5.4 Protection functions 88
5.4.1 General properties of a protection function 88
5.4.2 Non-directional overcurrent protection (I>; 50/51) 98
5.4.3 Non-directional earth fault protection (I0>; 50N/51N) 102
5.4.4 Directional overcurrent protection (Idir>; 67) 106
5.4.5 Directional earth fault protection (I0dir>; 67N/32N) 113
5.4.6 Intermittent earth fault protection (I0int>; 67NT) 126
5.4.7 Negative sequence overcurrent/ phase current reversal/ current unbalance protection (I2>; 46/46R/46L) 135
5.4.8 Harmonic overcurrent protection (Ih>; 50H/51H/68H) 140
5.4.9 Circuit breaker failure protection (CBFP; 50BF/52BF) 146
5.4.10 Low-impedance or high-impedance restricted earth fault/ cable end differential protection (I0d>; 87N) 160
5.4.11 Overvoltage protection (U>; 59) 170
5.4.12 Undervoltage protection (U<; 27) 177
5.4.13 Neutral overvoltage protection (U0>; 59N) 184
5.4.14 Sequence voltage protection (U1/U2>/<; 47/27P/59PN) 190
5.4.15 Overpower protection (P>; 32O) 197
5.4.16 Underpower protection (P<; 32U) 200
5.4.17 Reverse power protection (Pr; 32R) 204
5.4.18 Overfrequency and underfrequency protection (f>/<; 81O/81U) 208
5.4.19 Rate-of-change of frequency (df/dt>/<; 81R) 212
5.4.20 Voltage-restrained overcurrent protection (Iv>; 51V) 217
5.4.21 Line thermal overload protection (TF>; 49F) 221
5.4.22 Resistance temperature detectors (RTD) 243
5.4.23 Arc fault protection (IArc>/I0Arc>; 50Arc/50NArc) 245

© Arcteq Relays Ltd

5.4.24 Programmable stage (PSx>/<; 99) ... 254
5.5 Control functions ... 262
5.5.1 Setting group selection ... 262
5.5.2 Object control and monitoring ... 270
5.5.3 Indicator object monitoring ... 276
5.5.4 Auto-recloser (79) ... 277
5.5.5 Zero sequence recloser (U0> RECL; 79N) ... 303
5.5.6 Cold load pick-up (CLPU) ... 307
5.5.7 Switch-on-to-fault (SOTF) ... 316
5.5.8 Synchrocheck (ΔV/Δa/Δf; 25) ... 319
5.5.9 Milliampere output control ... 332
5.5.10 Vector jump (Δφ; 78) ... 334
5.5.11 Programmable control switch ... 339
5.5.12 Analog input scaling curves ... 340
5.5.13 Logical outputs ... 343
5.5.14 Logical inputs ... 344
5.6 Monitoring functions ... 346
5.6.1 Current transformer supervision ... 346
5.6.2 Voltage transformer supervision (60) ... 355
5.6.3 Circuit breaker wear monitoring ... 360
5.6.4 Current total harmonic distortion (THD) ... 365
5.6.5 Fault locator (21FL) ... 369
5.6.6 Disturbance recorder (DR) ... 372
5.6.7 Event logger ... 383
5.6.8 Measurement recorder ... 384
5.6.9 Fault register ... 384
5.6.10 Device diagnostics ... 390

6 Communication ... 393

6.1 Connections menu ... 393
6.2 Time synchronization ... 395
6.2.1 Internal ... 396
6.2.2 NTP ... 396
6.3 Communication protocols ... 397
6.3.1 IEC 61850 ... 397
6.3.1.1 GOOSE ... 399
6.3.2 Modbus TCP and Modbus RTU ... 400
6.3.3 IEC 103 ... 401
6.3.4 IEC 101/104 ... 402
6.3.5 SPA ... 404
6.3.6 DNP3 ... 404
6.3.7 Modbus I/O ... 407
6.3.8 Integration time ... 408
6.4 Analog fault registers ... 409
6.5 Real-time measurements to communication ... 409

7 Connections and application examples ... 413

7.1 Connections ... 413
7.1.1 Connections of AQ-F215 ... 413
7.2 Applications ... 413
7.2.1 Application example and its connections ... 413
7.2.2 Two-phase, three-wire ARON input connection ... 414
7.2.3 Trip circuit supervision (95) ... 415

8 Construction and installation ... 419

8.1 Construction ... 419
8.2 CPU module ... 421
8.3 Current measurement module ... 424
8.4 Voltage measurement module ... 425

8.5 Option cards ... 426
8.5.1 Digital input module (optional) ... 426
8.5.2 Digital output module (optional) ... 430
8.5.3 Point sensor arc protection module (optional) ... 432
8.5.4 RTD input module (optional) ... 433
8.5.5 Serial RS-232 communication module (optional) ... 434
8.5.6 Double LC or RJ45 (HSR/PRP) Ethernet communication module (optional) ... 436
8.5.7 Double ST 100 Ethernet & IRIG-B communication module (optional) ... 437
8.5.8 Double RJ45 Ethernet & IRIG-B communication module (optional) ... 438
8.5.9 Milliampere output module (4x mA out & 1x mA in) (optional) ... 439
8.6 Dimensions and installation ... 440

9 Technical data ... 443

9.1 Hardware ... 443
9.1.1 Measurements ... 443
9.1.1.1 Current measurement ... 443
9.1.1.2 Voltage measurement ... 444
9.1.1.3 Power and energy measurement ... 445
9.1.1.4 Frequency measurement ... 446
9.1.2 CPU & Power supply ... 446
9.1.2.1 Auxiliary voltage ... 446
9.1.2.2 CPU communication ports ... 447
9.1.2.3 CPU digital inputs ... 448
9.1.2.4 CPU digital outputs ... 448
9.1.3 Option cards ... 449
9.1.3.1 Digital input module ... 449
9.1.3.2 Digital output module ... 450
9.1.3.3 Point sensor arc protection module ... 450
9.1.3.4 RTD input module ... 452
9.1.3.5 Milliampere output module (4 x mA out & 1 x mA in) ... 452
9.1.3.6 Double LC (HSR/PRP) Ethernet communication module ... 453
9.1.3.7 Double RJ-45 (HSR/PRP) Ethernet communication module ... 454
9.1.3.8 Double ST Ethernet & IRIG-B communication module ... 454
9.1.3.9 Double RJ-45 Ethernet & IRIG-B communication module ... 455
9.1.3.10 RS-232 & serial fiber communication module ... 455
9.1.4 Display ... 456
9.2 Functions ... 456
9.2.1 Protection functions ... 456
9.2.1.1 Non-directional overcurrent protection (I>; 50/51) ... 456
9.2.1.2 Non-directional earth fault protection (I0>; 50N/51N) ... 457
9.2.1.3 Directional overcurrent protection (Idir>; 67) ... 458
9.2.1.4 Directional earth fault protection (I0dir>; 67N/32N) ... 460
9.2.1.5 Intermittent earth fault protection (I0int>; 67NT) ... 461
9.2.1.6 Negative sequence overcurrent/ phase current reversal/ current unbalance protection (I2>; 46/46R/46L) ... 462
9.2.1.7 Harmonic overcurrent protection (Ih>; 50H/51H/68H) ... 463
9.2.1.8 Circuit breaker failure protection (CBFP; 50BF/52BF) ... 464
9.2.1.9 Low-impedance or high-impedance restricted earth fault/ cable end differential protection (I0d>; 87N) ... 465
9.2.1.10 Overvoltage protection (U>; 59) ... 465
9.2.1.11 Undervoltage protection (U<; 27) ... 466
9.2.1.12 Neutral overvoltage protection (U0>; 59N) ... 467
9.2.1.13 Sequence voltage protection (U1/U2>/<; 47/27P/59NP) ... 468
9.2.1.14 Overfrequency and underfrequency protection (f>/<; 81O/81U) ... 469
9.2.1.15 Rate-of-change of frequency protection (df/dt>/<; 81R) ... 470
9.2.1.16 Line thermal overload protection (TF>; 49F) ... 471
9.2.1.17 Overpower (P>; 32O), underpower (P<; 32U) and reverse power (Pr; 32R) protection ... 471
9.2.1.18 Voltage-restrained overcurrent protection (Iv>; 51V) ... 472

© Arcteq Relays Ltd

9.2.1.19 Resistance temperature detectors (RTD) 473
9.2.1.20 Arc fault protection (IArc>/I0Arc>; 50Arc/50NArc) (optional) 474
9.2.1.21 Voltage memory 474
9.2.2 Control functions 475
9.2.2.1 Setting group selection 475
9.2.2.2 Object control and monitoring 476
9.2.2.3 Indicator object monitoring 476
9.2.2.4 Auto-reclosing (0 → 1; 79) 477
9.2.2.5 Cold load pick-up (CLPU) 477
9.2.2.6 Switch-on-to-fault (SOTF) 478
9.2.2.7 Zero sequence recloser (79N) 478
9.2.2.8 Vector jump (Δφ; 78) 479
9.2.2.9 Synchrocheck (ΔV/Δa/Δf; 25) 479
9.2.3 Monitoring functions 480
9.2.3.1 Current transformer supervision 480
9.2.3.2 Voltage transformer supervision (60) 481
9.2.3.3 Circuit breaker wear monitoring 482
9.2.3.4 Current total harmonic distortion 482
9.2.3.5 Fault locator (21FL) 483
9.2.3.6 Disturbance recorder 484
9.2.3.7 Event logger 484
9.3 Tests and environmental 484
10 Ordering information 487
11 Contact and reference information 489

Disclaimer

Please read these instructions carefully before using the equipment or taking any other actions with respect to the equipment. Only trained and qualified persons are allowed to perform installation, operation, service or maintenance of the equipment. Such qualified persons have the responsibility to take all appropriate measures, including e.g. use of authentication, encryption, anti-virus programs, safe switching programs etc. necessary to ensure a safe and secure environment and usability of the equipment. The warranty granted to the equipment remains in force only provided that the instructions contained in this document have been strictly complied with.

Nothing contained in this document shall increase the liability or extend the warranty obligations of the manufacturer Arcteq Relays Ltd. The manufacturer expressly disclaims any and all liability for any damages and/or losses caused due to a failure to comply with the instructions contained herein or caused by persons who do not fulfil the aforementioned requirements. Furthermore, the manufacturer shall not be liable for possible errors in this document.

Please note that you must always comply with applicable local legislation and regulations. The manufacturer gives no warranties that the content of this document is in all respects in line with local laws and regulations and assumes no liability for such possible deviations.

You are advised to notify the manufacturer in case you become aware of any errors in this document or of defects in the equipment.

The manufacturer reserves the right to update or amend this document at any time.

Copyright

Copyright © Arcteq Relays Ltd. 2026. All rights reserved.

1 Document information

1.1 Version 2 revision notes

Table. 1.1 - 1. Version 2 revision notes

Revision	2.00
Date	6.6.2019
Changes	- New more consistent look. - Improved descriptions generally in many chapters. - Improved readability of a lot of drawings and images. - Updated protection functions included in every manual. - Every protection relay type now has connection drawing, application example drawing with function block diagram and application example with wiring. - Added General-menu description.
Revision	2.01
Date	6.11.2019
Changes	- Added description for LED test and button test. - Added voltage restrained overcurrent function. - Complete rewrite of every chapter. - Improvements to many drawings and formula images. - Order codes revised. - Added double ST 100 Mbps Ethernet communication module and Double RJ45 10/100 Mbps Ethernet communication module descriptions
Revision	2.02
Date	7.7.2020
Changes	- A number of image descriptions improved.
Revision	2.03
Date	27.8.2020

Changes	- Terminology consistency improved (e.g. binary inputs are now always called digital inputs). - Tech data modified to be more informative about what type of measurement inputs are used (phase currents/voltages, residual currents/voltages), what component of that measurement is available (RMS, TRMS, peak-to-peak) and possible calculated measurement values (powers, impedances, angles etc.). - Tech data updated: non-directional overcurrent - Tech data updated: non-directional earthfault - Tech data updated: directional earthfault - Tech data updated: current unbalance - Tech data updated: overfrequency, underfrequency and rate-of-change-of-frequency. - Improvements to many drawings and formula images. - Improved and updated device user interface display images. - AQ-F215 Functions included list Added: Voltage memory, U0> recloser, vector jump protection, indicator object, programmable control switch, mA output control and measurement recorder. - Added "32N" ANSI code to directional earth fault protection modes "unearthed" and "petersen coil grounded". - Added 6th harmonic to harmonic overcurrent protection function. - Fixed reset ratio of under- and overfrequency protection function from 103 % / 97 % to +/- 20 mHz.. - Fixed reset ratio of rate-of-change-of-frequency protection function from 20 mHz/s to 100 mHz/s. - Changed disturbance recorder maximum digital channel amount from 32 to 95. - Added residual current coarse and fine measurement data to disturbance recorder description. - HSO1 and HSO2 connection swapped in arc protection card (was way wrong before). - Updated I01 and I02 rated current range. - Added inches to Dimensions and installation chapter. - Added raising frames, wall mounting bracket, combiflex frame to order code. - Added logical input and logical output function descriptions. - Additions to Abbreviations chapter. - Added button test description to Local panel structure chapter. - Added Fault register view to Basic configuration chapter. - Added parameter descriptions to General menu Device user interface chapter. - Protection device user interface chapter almost completely rewritten and restructured. - Added new parameter descriptions to Monitoring menu device user interface chapter. - Added note to Configuring user levels and passwords chapter that user level with a password automatically locks itself after 30 minutes of inactivity. - Added more "Tripped stage" indications and fault types to Measurement value recorder function. - Updated: Digital input activation and release threshold setting ranges and added drop-off delay setting. - Added sample rate to voltage and current measurement tech data. - Fixed overvoltage, undervoltage, neutral overvoltage and sequence voltage stage misspelled IDMT curve formula.
Revision	2.04
Date	8.6.2021
Changes	- Increased the consistency in terminology - Various image upgrades - Visual update to the order codes
Revision	2.05
Date	22.6.2021

© Arcteq Relays Ltd
IM00014

Changes	- Fixed phase current measurement continuous thermal withstand from 30A to 20A. - Fixed lots of timing errors written to registers table. "Prefault" is -200 ms from Start event, "Pretrigger" is -20 ms from trip (or start if fault doensn't progress to trip), "Fault" is start (or trip if fault doesn't progress to trip). - Added event history technical data
Revision	2.06
Date	21.6.2022
Changes	- Improved descriptions generally in many chapters. - Improved readability of a lot of drawings and images. - Order codes have been revised. - Fixed bias calculation formula for restricted earth fault function. Was correctly in the code, just written wrong in the manual. - Added synchrocheck start check parameter description. - Added new trip detections and fault types to measurement value recorder. - Added user description parameter descriptions for digital inputs, digital outputs, logical inputs, logical outputs and GOOSE inputs. - Arc point sensor HSO1 and HSO2 position fixed. - Added spare part codes and compatibilities to option cards.
Revision	2.07
Date	7.7.2022
Changes	- Added THD voltage measurements. - Added zero sequence recloser description.
Revision	2.08
Date	8.9.2022
Changes	- Added stage forcing parameter to function descriptions. - Fixes to "Real time signals to comm" description. - Added "Ethernet port" parameter description to IEC61850, IEC104 and Modbus TCP descriptions. - Removed "Measurement update interval" settings from Modbus description. No longer in use. - Renamed "System integration" chapter to "Communication" and restructured the chapters to be closer to how they are in the menus. - Added "Event logger" chapter.
Revision	2.09
Date	14.3.2023
Changes	- Updated the Arcteq logo on the cover page and refined the manual's visual look. - Added the "Safety information" chapter and changed the notes throughout the document accordingly. - Changed the "IED user interface" chapter's title to "Device user interface" and replaced all 'IED' terms with 'device' or 'unit'. - Updated the rated values for the change-over CPU digital outputs in "Technical data". - Added the maximum and minimum allowed tracking frequencies to the settings table of the "Frequency tracking and scaling" chapter (under "Measurements"). - Updated the input impedance for the voltage measurement module in "Technical data".
Revision	2.10
Date	19.6.2023

Changes	- Updated order codes.
Revision	2.11
Date	29.11.2023
Changes	- Added the 5 ms update time in the measurement chapters. - Added spring lock cage options for connectors. See the "Ordering information" chapter. - Updated the contact address for technical support in the "Contact and reference information" chapter.
Revision	2.12
Date	January 2024
Changes	- Added "I2 meas / I2 set" and other read-only parameters to "I2> function". - Added voltage input thresholds to "Voltage measurement and scaling". - Added Chinese and Kazakh languages as language options in "General menu".
Revision	2.13
Date	September 2024
Changes	- Corrected the number of devices that fit a 19 in rack in the "Dimensions and installation" chapter.
Revision	2.14
Date	June 2025
Changes	- Updated the product and packaging weights. - Order code table updated.
Revision	2.15
Date	August 2026
Changes	- Updated the Connections images. - Updated the make-and-carry of the Point sensor arc protection module. - Added information to the technical data for Frequency measurement.

1.2 Version 1 revision notes

Table. 1.2 - 2. Version 1 revision notes

Revision	1.00
Date	8.4.2013
Changes	• The first revision for AQ-F215.
Revision	1.01
Date	22.11.2013

© Arcteq Relays Ltd
IM00014

Changes	• Application example for ARON input connection added to Chapter 8. • Application example for trip circuit supervision added. • Added power protection functions. • Added the arc protection module description. • Added the over- and underfrequency protection description and their technical data. • Added the arc protection description and its technical data.
Revision	1.02
Date	21.1.2014
Changes	• Added the synchrocheck function description and its technical data. • Added the df/dt function.
Revision	1.03
Date	3.11.2014
Changes	• Added the intermittent earth fault function to the manual. • Added the mA/RTD card. • Order code updated.
Revision	1.04
Date	20.1.2015
Changes	• Added the double LC 100Mb Ethernet module and the RS-232 & serial fiber module hardware descriptions. • Added the system integration text for the SPA protocol. • Replaced the positive and negative sequence overvoltage function with the sequence voltage function. • Order code updated.
Revision	1.05
Date	15.4.2015
Changes	• Added the non-standard curve characteristics to some protection stages.
Revision	1.06
Date	12.1.2016
Changes	• Added the digital input operation description.
Revision	1.07
Date	30.5.2016
Changes	• Added the PCB and Terminal options to the order code.
Revision	1.08
Date	30.8.2016
Changes	• Added the password set-up guide (previously only in the AQtivate 200 user guide).
Revision	1.09
Date	19.1.2017

Changes	• Added the vector jump function (78). • Added the indicator object, programmable control switch and programmable stage descriptions. • Order code updated.
Revision	1.10
Date	14.12.2017
Changes	• Measurement value recorder description added. • ZCT connection added to the current measurement description. • Internal harmonics blocking added to the I>, I0>, Idir>, and I0dir> function descriptions. • Non-standard delay curves added. • Event lists revised on several functions. • RTD & mA card description improved. • Auto-recloser function readability improved. • Ring-lug CT card option description added. • Fault view description added. • New U> and U< function measurement modes documented. • Order code revised.
Revision	1.11
Date	14.8.2018
Changes	• Added the mA output option card description and updated the order code.
Revision	1.12
Date	8.10.2018
Changes	• Measurement technical data updated.
Revision	1.13
Date	18.1.2019
Changes	• HMI display technical data updated.

© Arcteq Relays Ltd

2 Abbreviations

AI – Analog input

AR – Auto-recloser

ASDU – Application service data unit

AVR – Automatic voltage regulator

BCD – Binary-coded decimal

CB – Circuit breaker

CBFP – Circuit breaker failure protection

CLPU – Cold load pick-up

CPU – Central processing unit

CT – Current transformer

CTM – Current transformer module

CTS – Current transformer supervision

DG – Distributed generation

DHCP – Dynamic Host Configuration Protocol

DI – Digital input

DO – Digital output

DOL – Direct-on-line

DR – Disturbance recorder

DT – Definite time

FF – Fundamental frequency

FFT – Fast Fourier transform

FTP – File Transfer Protocol

GI – General interrogation

HMI – Human-machine interface

HR – Holding register

HV – High voltage

HW – Hardware

IDMT – Inverse definite minimum time

IGBT – Insulated-gate bipolar transistor

I/O – Input and output

IRIG-B – Inter-range instruction group, timecode B

LCD – Liquid-crystal display

LED – Light emitting diode

LV – Low voltage

NC – Normally closed

NO – Normally open

NTP – Network Time Protocol

RMS – Root mean square

RSTP – Rapid Spanning Tree Protocol

RTD – Resistance temperature detector

RTU – Remote terminal unit

SCADA – Supervisory control and data acquisition

SG – Setting group

SOTF – Switch-on-to-fault

SW – Software

THD – Total harmonic distortion

TRMS – True root mean square

VT – Voltage transformer

VTM – Voltage transformer module

VTS – Voltage transformer supervision

© Arcteq Relays Ltd
IM00014

3 General

The AQ-F215 feeder protection device is a member of the AQ 200 product line. The hardware and software are modular: the hardware modules are assembled and configured according to the application's I/O requirements and the software determines the available functions. This manual describes the specific application of the AQ-F215 feeder protection device. For other AQ 200 and AQ 250 series products please consult their respective device manuals.

AQ-F215 offers a modular feeder protection and control solution for applications that require both current-based and voltage-based protections as well as complete measurements. There are up to three (3) option card slots available for additional I/O or communication cards for more comprehensive monitoring and control applications. AQ-F215 communicates using various protocols including the IEC 61850 substation communication standard.

4 Device user interface

4.1 Panel structure

The user interface section of an AQ 200 or AQ 250 series device is divided into two user interface sections: one for the hardware and the other for the software. You can access the software interface either through the front panel or through the AQtivate 200 freeware software suite.

4.2 Local panel structure

The front panel of AQ 200 series devices have multiple LEDs, control buttons and a local RJ-45 Ethernet port for configuration. Each unit is also equipped with an RS-485 serial interface and an RJ-45 Ethernet interface on the back of the device.

Figure. 4.2 - 1. Local panel structure.

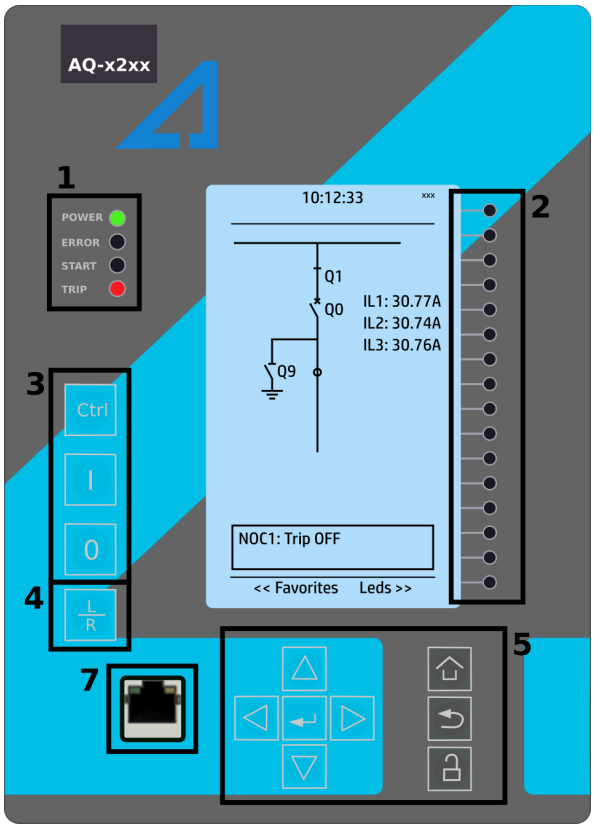

1. Four (4) default LEDs: "Power", "Error", "Start" (configurable) and "Trip" (configurable).
2. Sixteen (16) freely configurable LEDs with programmable legend texts.
3. Three (3) object control buttons: Choose the controllable object with the Ctrl button and control the breaker or other object with the I and O buttons.
4. The L/R button switches between the local and the remote control modes.
5. Eight (8) buttons for device local programming: the four navigation arrows and the Enter button in the middle, as well as the Home, the Back and the password activation buttons.
6. One (1) RJ-45 Ethernet port for device configuration.

© Arcteq Relays Ltd
IM00014

When the unit is powered on, the green "Power" LED is lit. When the red "Error" LED is lit, the device has an internal (hardware or software) error that affects the operation of the unit. The activation of the yellow "Start" LED and the red "Trip" LED are based on the setting the user has put in place in the software.

The sixteen freely configurable LEDs are located on the right side of the display. Their activation and color (green or yellow) are based on the settings the user has put in place in the software.

Holding the I (object control) button down for five seconds brings up the button test menu. It displays all the physical buttons on the front panel. Pressing any of the listed buttons marks them as tested. When all buttons are marked as having been tested, the device will return back to the default view.

4.3 Mimic and main menu

4.3.1 Basic configuration

The user interface is divided into seven (7) quick displays: "Mimic", "LEDs", "Events", "Clock", "Measurement", "Favorites" and "Fault register". The default quick display (as presented in the image below) is the mimic view; you can move through these menus by pressing the left and right arrow buttons. Please note that the available quick display carousel view might be different if you have changed the view with AQtivate's Carousel Designer tool.

Figure. 4.3.1 - 2. Basic navigation (general).

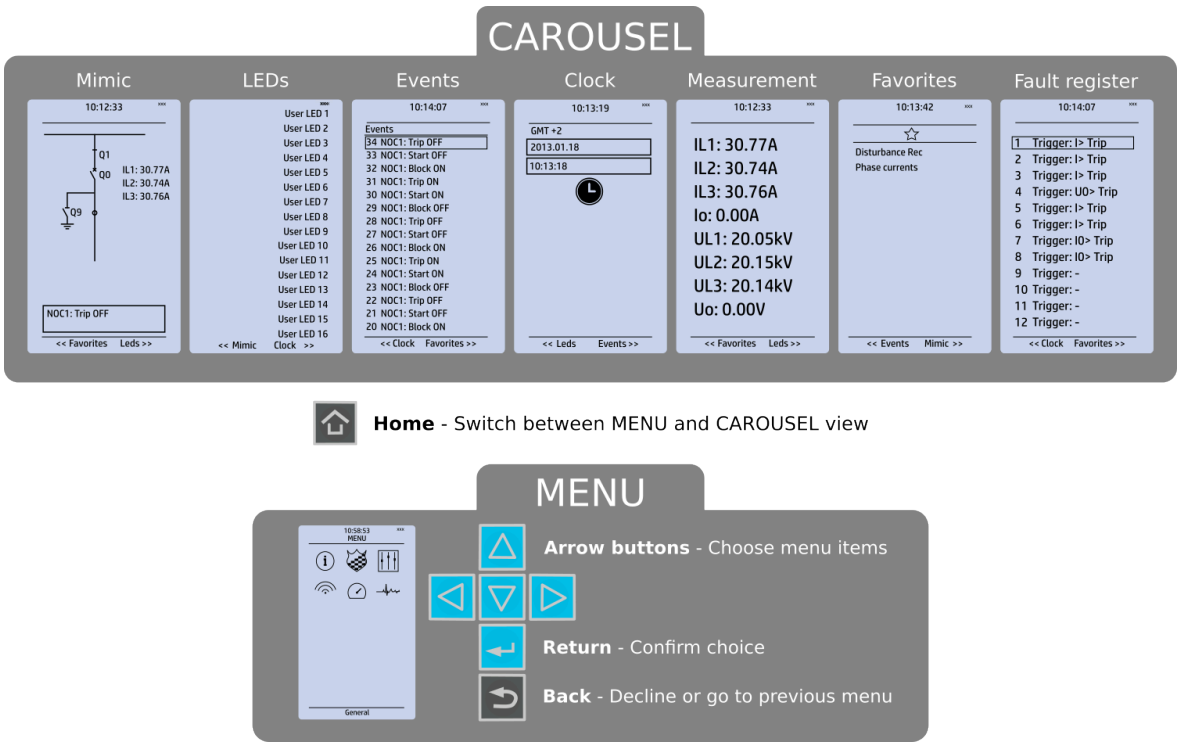

The Home button switches between the quick display carousel and the main display with the six (6) main configuration menus (*General*, *Protection*, *Control*, *Communication*, *Measurements* and *Monitoring*). Note that the available menus vary depending on the device type. You can select one of the menus by using the four navigation arrows and pressing Enter in the middle. The Back button takes you back one step. If you hold it down for three seconds, it takes you back to the main menu. You can also use it to reset the alarm LEDs you have set.

The password activation button (with the padlock icon) takes you to the password menu where you can enter the passwords for the various user levels (User, Operator, Configurator, and Super-user). See "Configuring user levels and their passwords" for more detail.

4.3.2 Navigation in the main configuration menus

All the settings in this device have been divided into the following six (6) main configuration menus:

- General
- Protection
- Control
- Communication
- Measurement
- Monitoring.

They are presented in the image below. The available menus vary according to the device type.

Figure. 4.3.2 - 3. Main configuration menus.

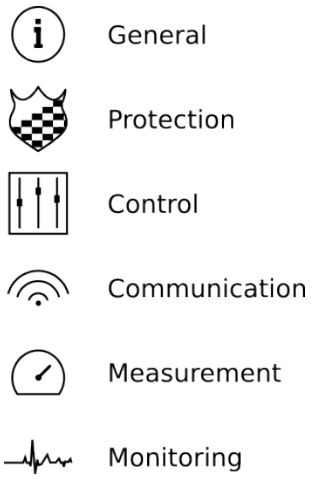

4.4 General menu

The *General* main menu is divided into two submenus: the *Device info* tab presents the information of the device, while the *Function comments* tab allows you to view all comments you have added to the functions.

© Arcteq Relays Ltd

Figure. 4.4 - 4. General menu structure.

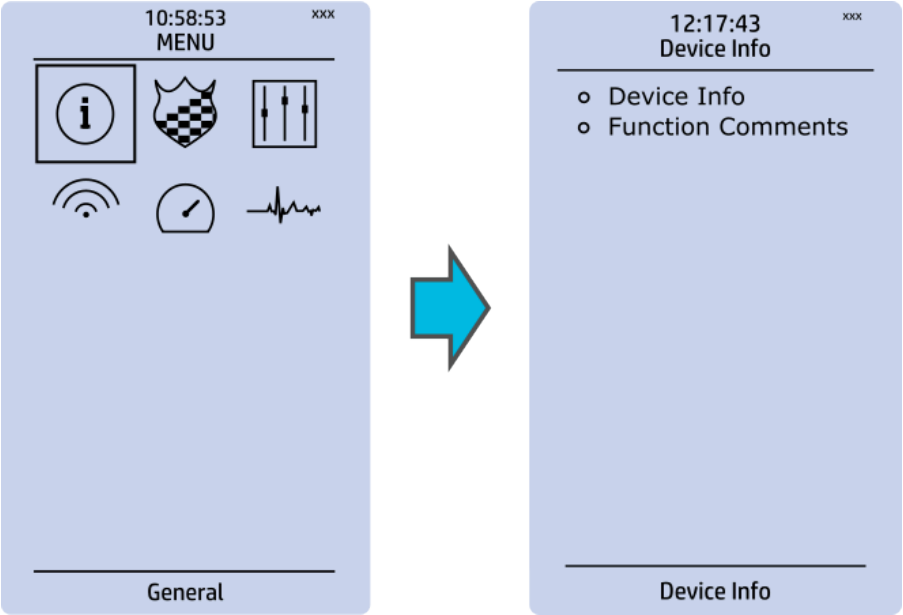

Device info

Figure. 4.4 - 5. Device info.

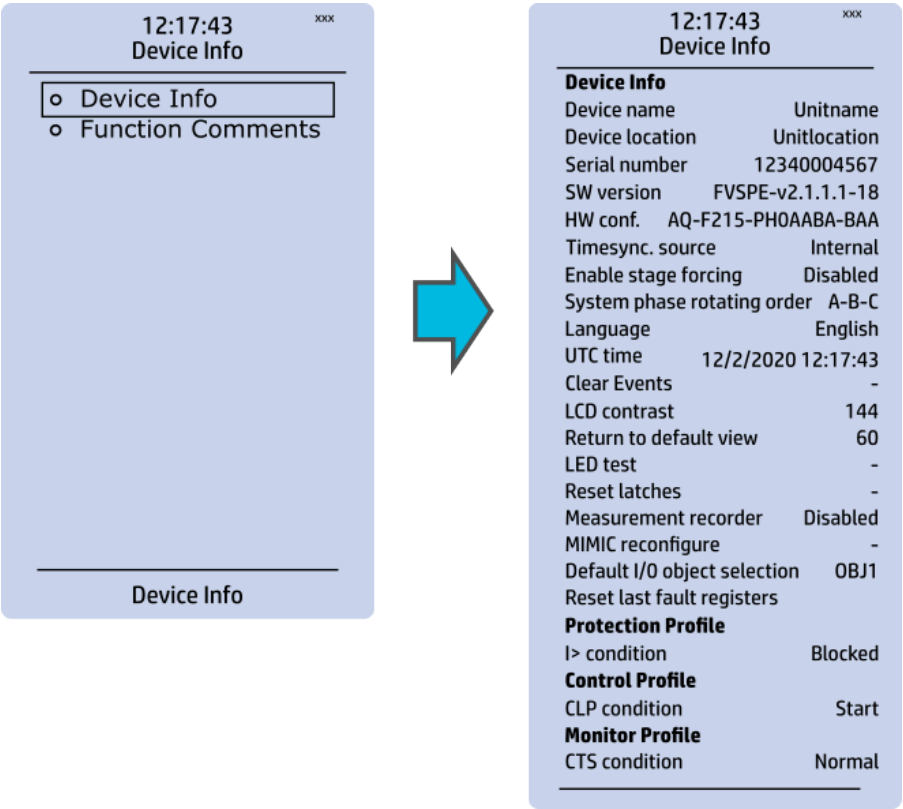

Table. 4.4 - 3. Parameters and indications in the *General* menu.

Name	Range	Step	Default	Description
Device name	-	-	Unitname	The file name uses these fields when loading the .aqs configuration file from the AQ 200 device.
Device location	-	-	Unitlocation	
Serial number	-	-	-	Displays the unit's unique serial number. The serial number is also printed on the sticker located on the side of the unit.
Firmware version	-	-	-	Displays the software version (firmware) used by the unit. Upgradable by the user if a newer version is available.
Hardware configuration	-	-	-	Displays the hardware configuration of the unit. The hardware configuration is also printed on the sticker located on the side of the unit.
Time synchronization source	• Internal • External NTP • External Serial • IRIG-B	-	• Internal	If an external clock time synchronization source is available, the type is defined with this parameter. In the internal mode there is no external Timesync source. IRIG-B requires a serial fiber communication option card.
Enable stage forcing	• Disabled • Enabled	-	• Disabled	When this parameter is enabled it is possible for the user to force the protection, control and monitoring functions to different statuses like START and TRIP. This is done in the function's *Info* page with the *Force status to* parameter.
System phase rotating order	• A-B-C • A-C-B	-	• A-B-C	Allows the user to switch the expected order in which the voltage and current phases are wired to the unit.
Language	• User defined • English • Finnish • Chinese • Spanish • French • German • Russian • Ukrainian • Kazakh	-	• English	Changes the language of the parameter descriptions in the HMI. If the language has been set to "Other" in the settings of the AQtivate 200 setting tool, AQtivate follows the value set into this parameter.
UTC time	-	-	-	Displays the UTC time used by the unit without time zone corrections.
Clear events	• - • Clear	-	• -	Clears the event history recorded in the device.
LCD Contrast	0…255	1	120	Changes the contrast of the LCD display.

© Arcteq Relays Ltd
IM00014

Name	Range	Step	Default	Description
Return to default view	0…3600 s	10 s	0 s	If the user navigates to a menu and gives no input after a period of time defined with this parameter, the unit automatically returns to the default view. If set to 0 s, this feature is not in use.
LED test	• - • Activated	-	• -	When activated, all LEDs are lit up. LEDs with multiple possible colors blink each color.
Reset latches	• - • Reset	-	• -	Resets the latched signals in the logic and the matrix. When a reset command is given, the parameter automatically returns back to "-".
Measurement recorder	• Disabled • Enabled	-	• Disabled	Enables the measurement recorder tool, further configured in *Tools → Misc → Measurement recorder.*
Reconfigure mimic	• - • Reconfigure	-	• -	Reloads the mimic to the unit.
Reset last fault registers	-	-	-	Activation of input selected here resets the values in "Fault registers" view in carousel.
Protection/Control/ Monitor profile	-	-	-	Displays the status of all enabled functions.

Function comments

Function comments displays notes of each function that has been activated in the Protection, Control and Monitoring menu. Function notes can be edited by the user.

Figure. 4.4 - 6. Function comments.

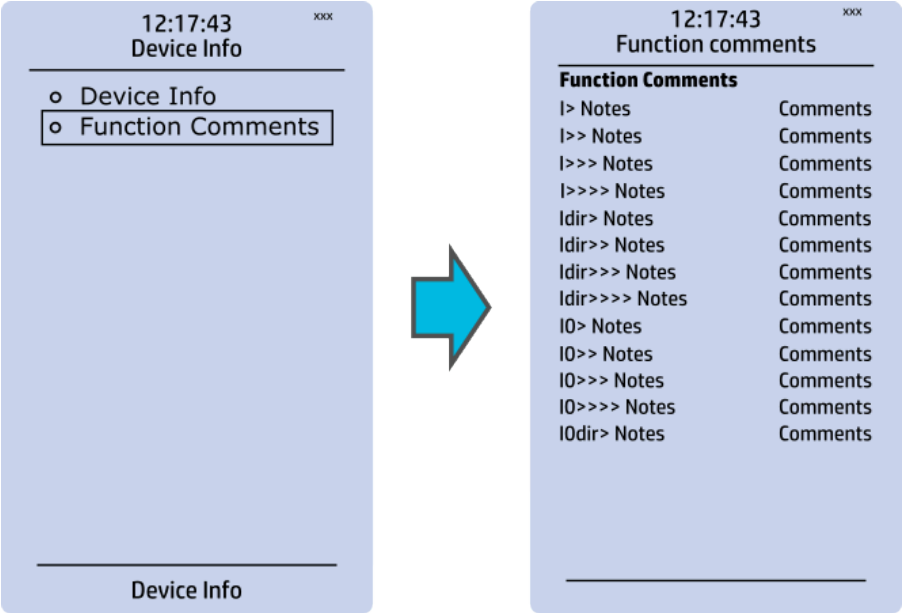

4.5 Protection menu

General

Figure. 4.5 - 7. Protection menu structure.

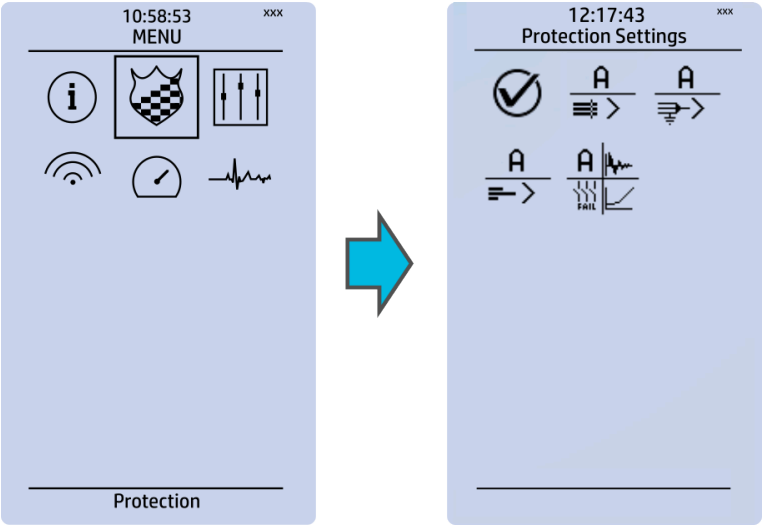

The *Protection* main menu includes the *Stage activation* submenu as well as the submenus for all the various protection functions, categorized under the following modules: "Arc protection", "Current", "Voltage", "Frequency", "Sequence" and "Supporting" (see the image below). The available functions depend on the device type in use.

© Arcteq Relays Ltd
IM00014

Figure. 4.5 - 8. Protection menu view.

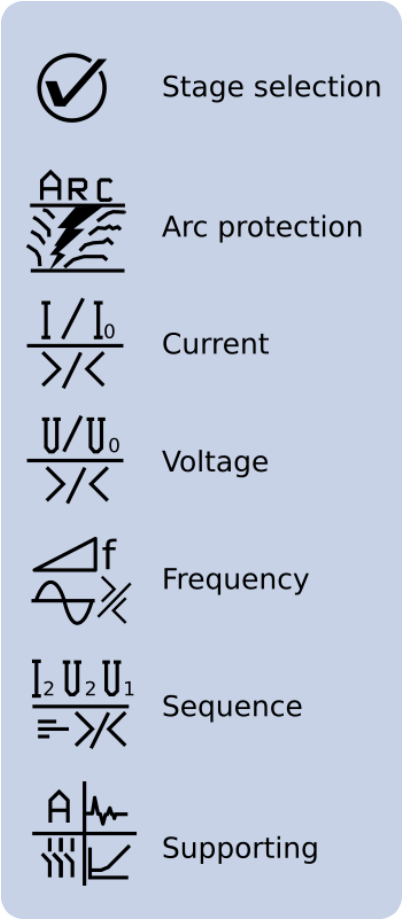

Stage activation

You can activate the various protection stages in the *Stage activation* submenu (see the images below). Each protection stage and supporting function is disabled by default. When you activate one of the stages, its activated menu appears in the stage-specific submenu. For example, the I> (overcurrent) protection stage can be found in the "Current" module, whereas the U< (undervoltage) protection stage can be found in the "Voltage" module.

Figure. 4.5 - 9. Submenus for Stage activation.

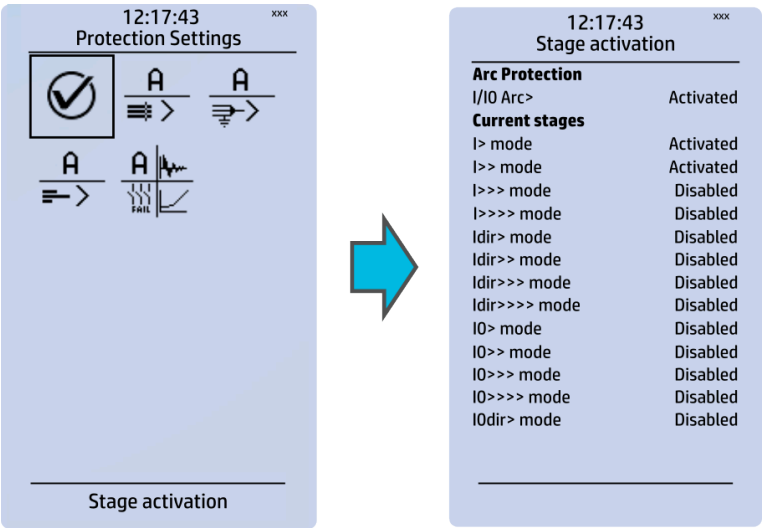

Example of a protection stage and its use

Once a protection stage has been activated in the *Stage activation* submenu, you can open its own submenu. In the image series below, the user has activated three current stages. The user accesses the list of activated current stages through the "Current" module, and selects the I> stage for further inspection.

Figure. 4.5 - 10. Accessing the submenu of an individual activated stage.

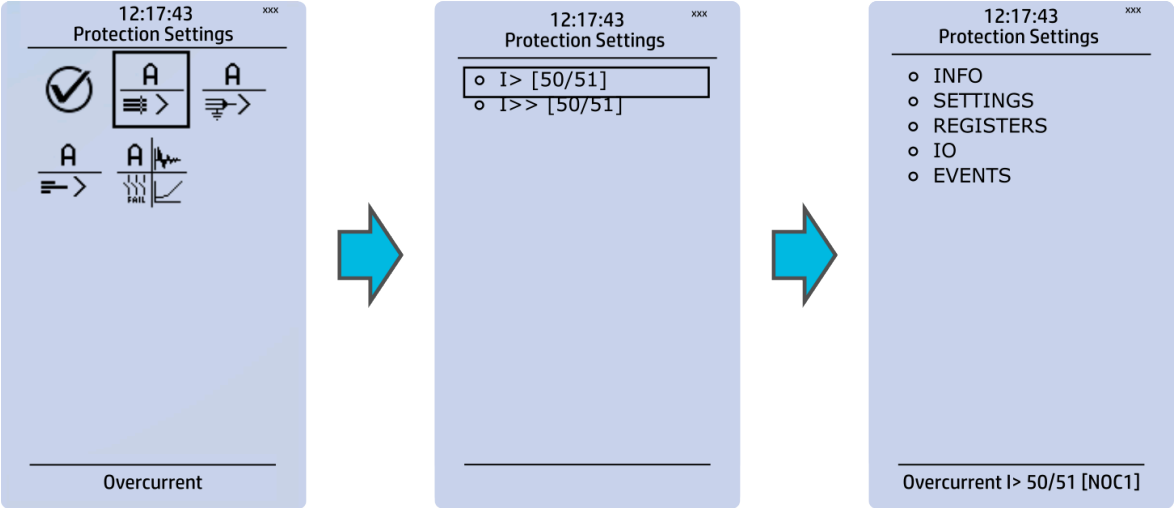

Each protection stage and supporting function has five sections in their stage submenus: "Info", "Settings", "Registers", "I/O" and "Events".

Figure. 4.5 - 11. Info.

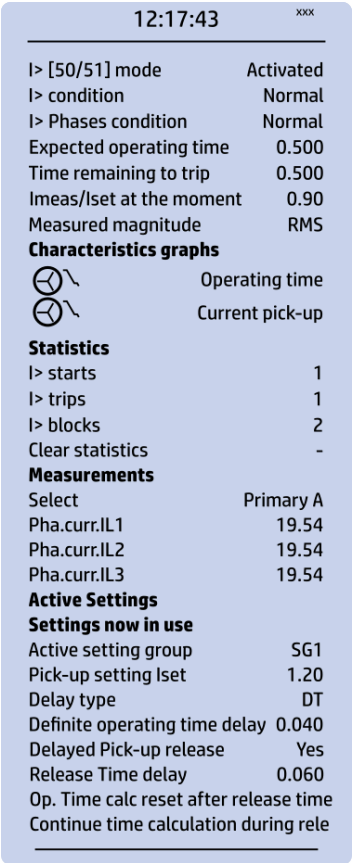

© Arcteq Relays Ltd
IM00014

The "Info" section offers many details concerning the function and its status:

- Function condition: indicates the stage's condition which can be Normal, Start, Trip, or Blocked.
- Expected operating time: Expected time delay from detecting a fault to tripping the breaker. This value can vary during a fault if an inverse curve time delay (IDMT) is used.
- Time remaining to trip: When a fault is detected this value counts down towards zero. When zero is reached, the function will trip.
- Imeas/Iset at the moment: Displays the ratio between the measured value and the pick-up level.
- Measured magnitude: In some functions it is possible to choose the monitored magnitude between Peak-to-peak, TRMS, or RMS (the default is RMS; the available magnitudes depend on the function).
- Characteristics graphs: opens graphs related to the protection function.
- Statistics: indicates the number of function starts, trips and blocks (can be cleared through "Clear statistics" → "Clear").
- Measurements: displays the measurements carried out by the function.
- Active settings: displays the setting group that is currently in use and its settings (other setting groups can be set in the "Settings" section).

While the function is activated and disabled in the *Stage activation* submenu, you can disable the function through the "Info" section ("Function mode" at the top of the section).

Figure. 4.5 - 12. Settings.

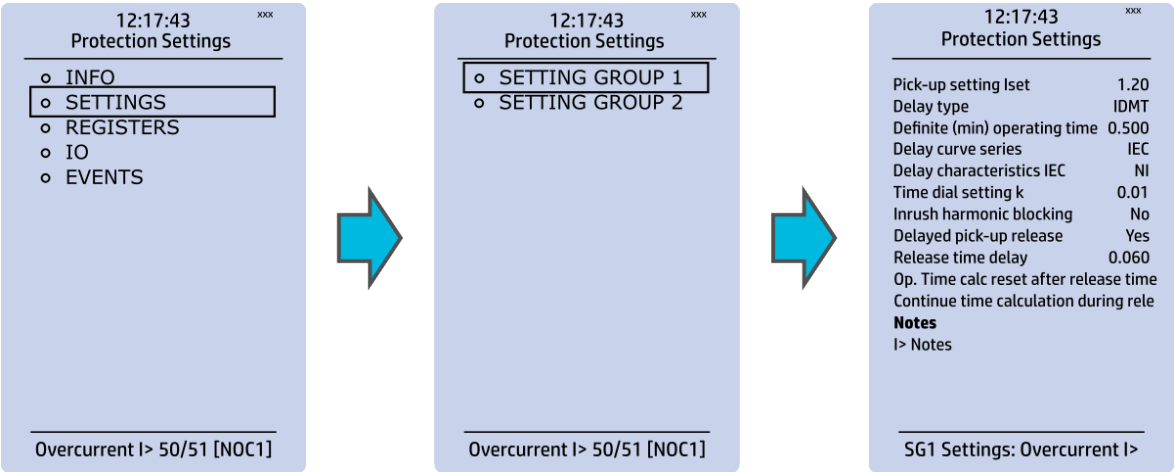

The stage settings vary depending on which protection function they are a part of. By default only one setting group of the eight available setting groups is activated. You can enable more groups in the *Control → Setting groups* menu, although they are set here in the "Settings" section.

Most protection functions follow the same structure:

- Pick-up setting: Defines the fault magnitude. Most functions pick-up value is in relation to the current transformer or voltage transformer nominal, but some functions use kW, ohm, Hz and other units. Voltage and current transformers nominal values can be set at *Measurement → Transformers*.
- Delay type and operating time delay settings are described in detail in General properties of a protection function chapter.

Figure. 4.5 - 13. Registers.

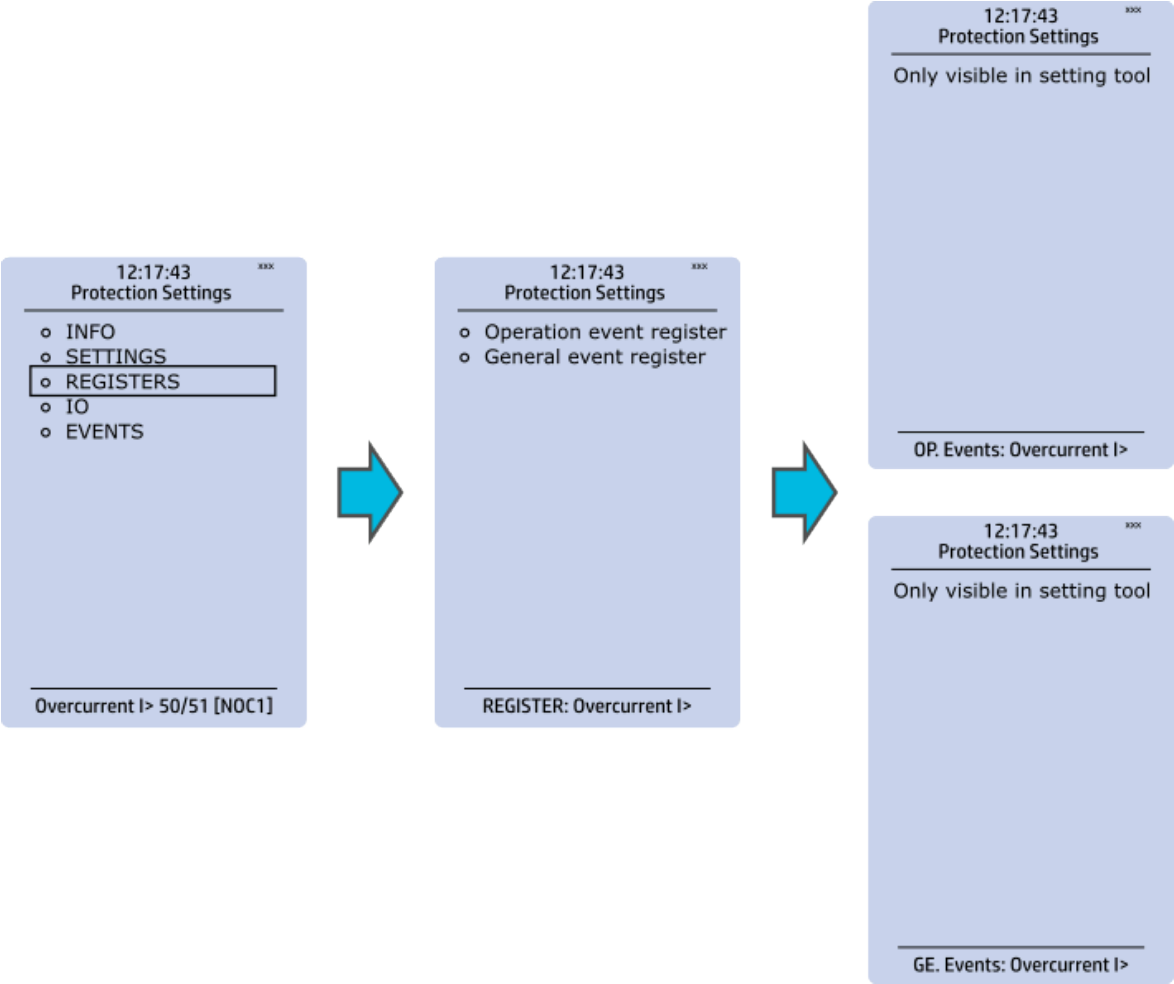

Register menu content is not available in the HMI. It can only be accessed with AQtivate setting tool. Stored in the "Registers" section you can find both "Operation event register" and "General event register".

"Operation event register" stores the function's specific fault data. There are twelve (12) registers, and each of them includes data like the pre-fault value, the fault value, the time stamp and the active group during the trigger. Data included in the register depend on the protection function. You can clear the the operation register by choosing "Clear registers" → "Clear".

"General event register" stores the event generated by the stage. These general event registers cannot be cleared.

© Arcteq Relays Ltd
IM00014

Figure. 4.5 - 14. I/O.

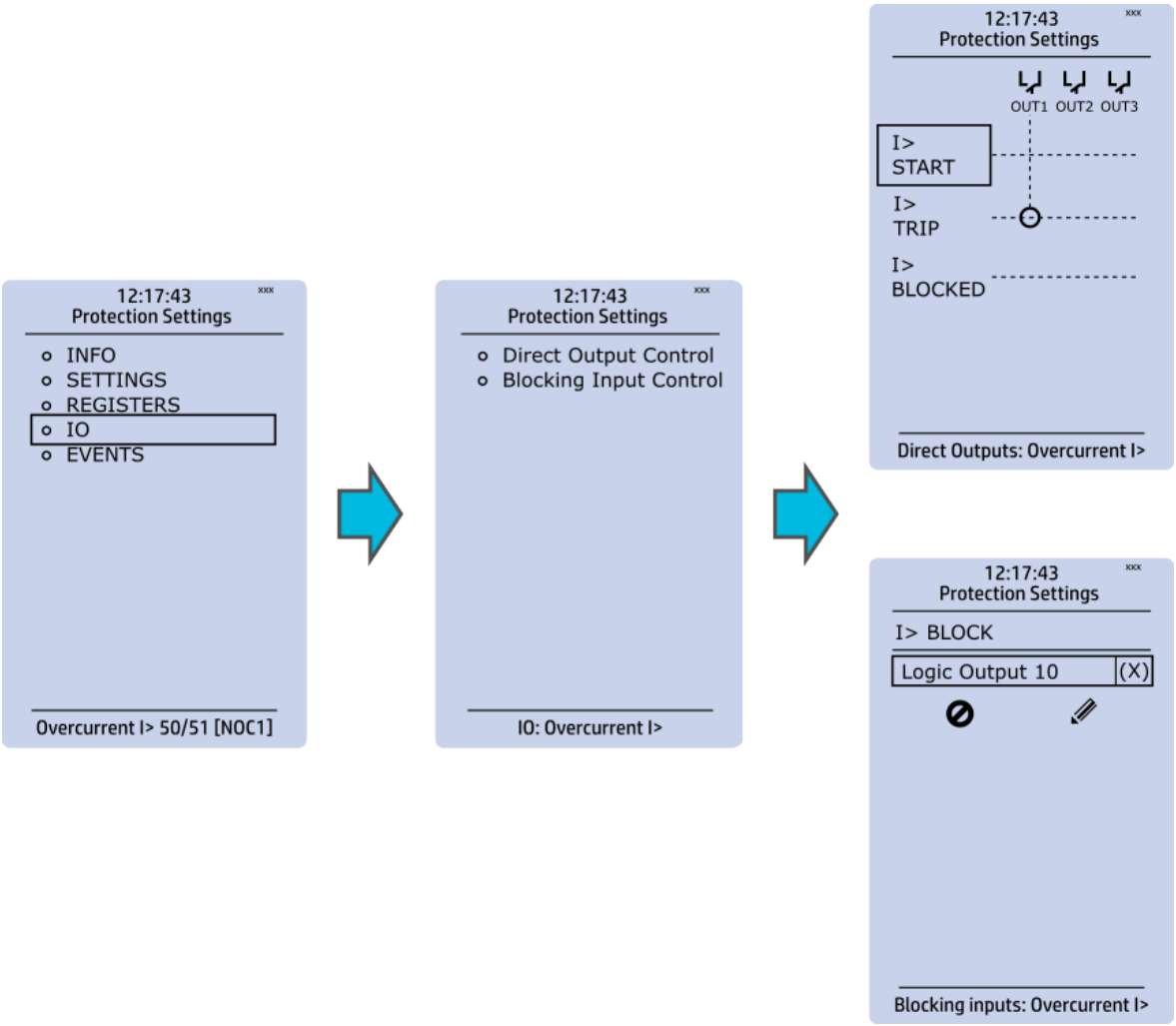

The "I/O" section is divided into two subsections: "Direct output control" and "Blocking input control".

In "Direct output control" you can connect the stage's signals to physical outputs, either to an output relay or an LED (START or TRIP LEDs or one of the 16 user configurable LEDs). If the stage is blocked internally (DI or another signal), you can configure an output to indicate the stage that is blocked. A connection to an output can be either latched ("|x|") or non-latched ("x").

"Blocking input control" allows you to block stages. The blocking can be done by using any of the following:

- digital inputs
- logical inputs or outputs
- the START, TRIP or BLOCKED information of another protection stage
- object status information.

Figure. 4.5 - 15. Events.

You can mask on and mask off the protection stage related events in "Event mask". By default events are masked off. You can activate the desired events by masking them ("x"). Remember to save your maskings by confirming the changes with the check mark icon. If you want to cancel the changes, select the strike-through circle to do so. Only masked events are recorded to event history (which can be accessed in the "Events" view in the user view section).

4.6 Control menu

Main menu

Figure. 4.6 - 16. Main menu structure.

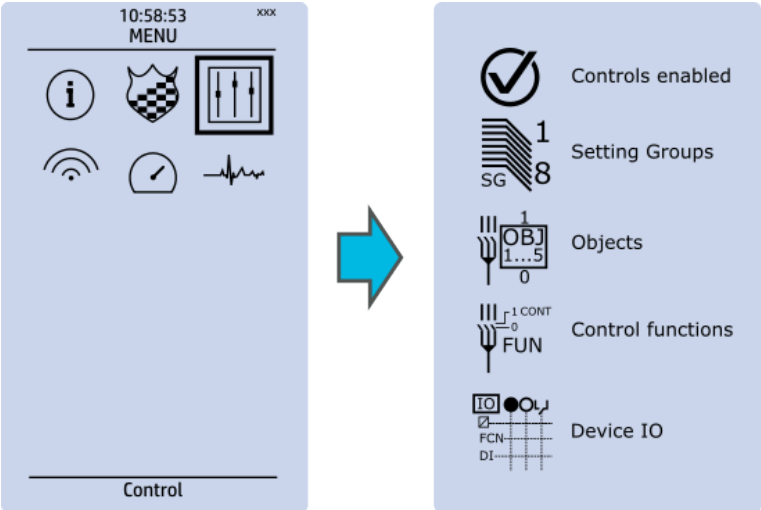

The *Control* main menu includes submenus (see the image above) for enabling the various control functions and objects (*Controls enabled*), for enabling and controlling the setting groups (*Setting groups)*, for configuring the objects (*Objects)*, for setting the various control functions (*Control functions)*, and for configuring the inputs and outputs (*Device I/O)*. The available control functions depend on the model of the device in use.

© Arcteq Relays Ltd
IM00014

Controls enabled

Figure. 4.6 - 17. Controls enabled submenu.

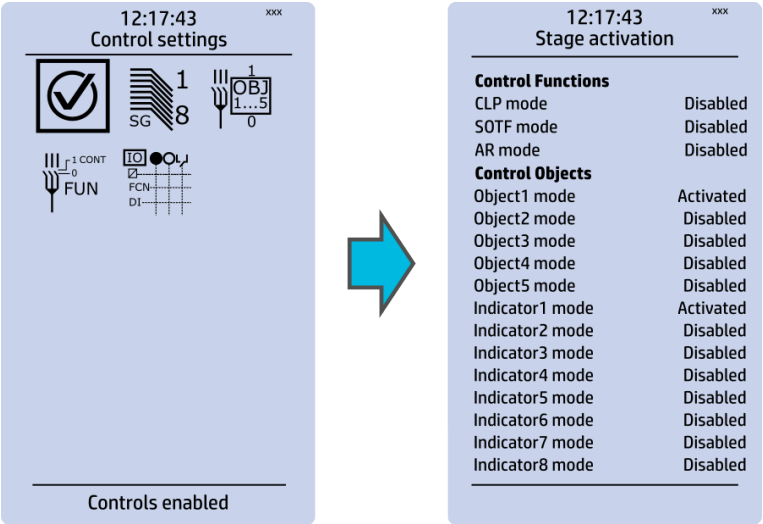

You can activate the selected control functions in the *Controls enabled* submenu. By default all the control functions are disabled. All activated functions can be viewed in the *Control functions* submenu (see the section "Control functions" below for more information).

In this submenu you can also activate and disable controllable objects. As with control functions, all objects are disabled by default. All activated objects can be viewed in the *Objects* submenu (see the section "Objects" below for more information).

Setting groups

Figure. 4.6 - 18. Setting groups submenu.

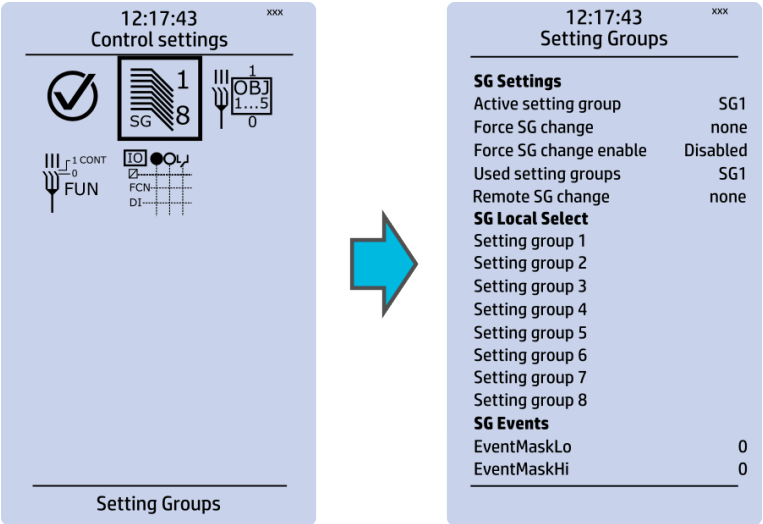

The *Setting groups* submenu displays all the information related to setting group changing, such as the following:

- Active setting group: displays the current active setting group (SG1…SG8).
- Force setting group change: this setting allows the activation of a setting group at will (please note that Force SG change enable must be "Enabled").

- Used setting groups: this setting allows the activation of setting groups SG1...SG8 (only one group is active by default).
- SG local select: selects the local control for the different setting groups (can use digital inputs, logical inputs or outputs, RTDs, object status information as well as stage starts, trips or blocks).
- Remote setting group change: When enabled it is possible to change the setting group manually through SCADA.
- SG events: event masking for setting groups (masks are OFF by default; please note that only masked events are recorded into the event history).

Setting group 1 (SG1) has the highest priority, while Setting group 8 (SG8) has the lowest priority. Setting groups can be controlled with pulses or with both pulses and static signals (see the image below).

Figure. 4.6 - 19. Example of setting group (SG) changing.

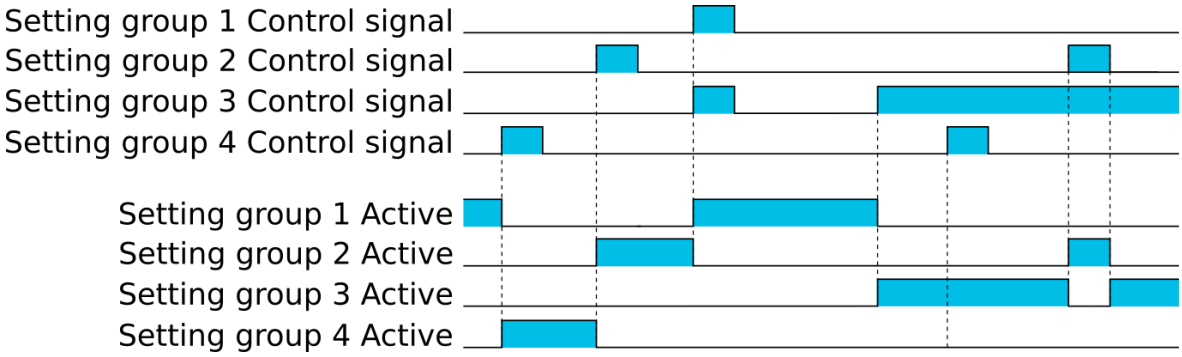

Objects

Figure. 4.6 - 20. Objects submenu.

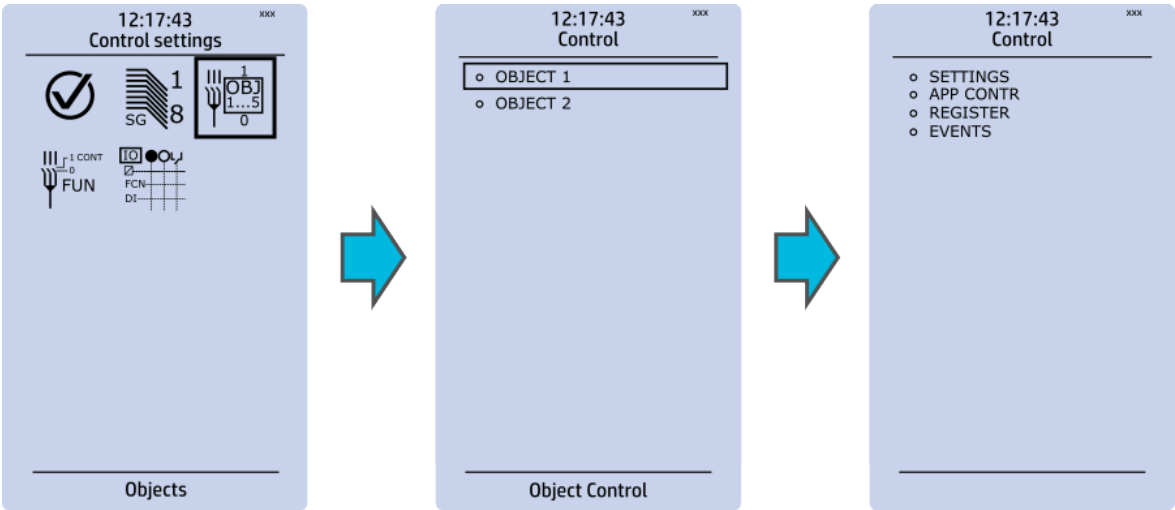

Each activated object is visible in the *Objects* submenu. By default all objects are disabled unless specifically activated in the *Controls → Controls enabled* submenu. Each active object has four sections in their submenus: "Settings", "Application control" ("App contr"), "Registers" and "Events". These are described in further detail below.

© Arcteq Relays Ltd

Figure. 4.6 - 21. Settings section.

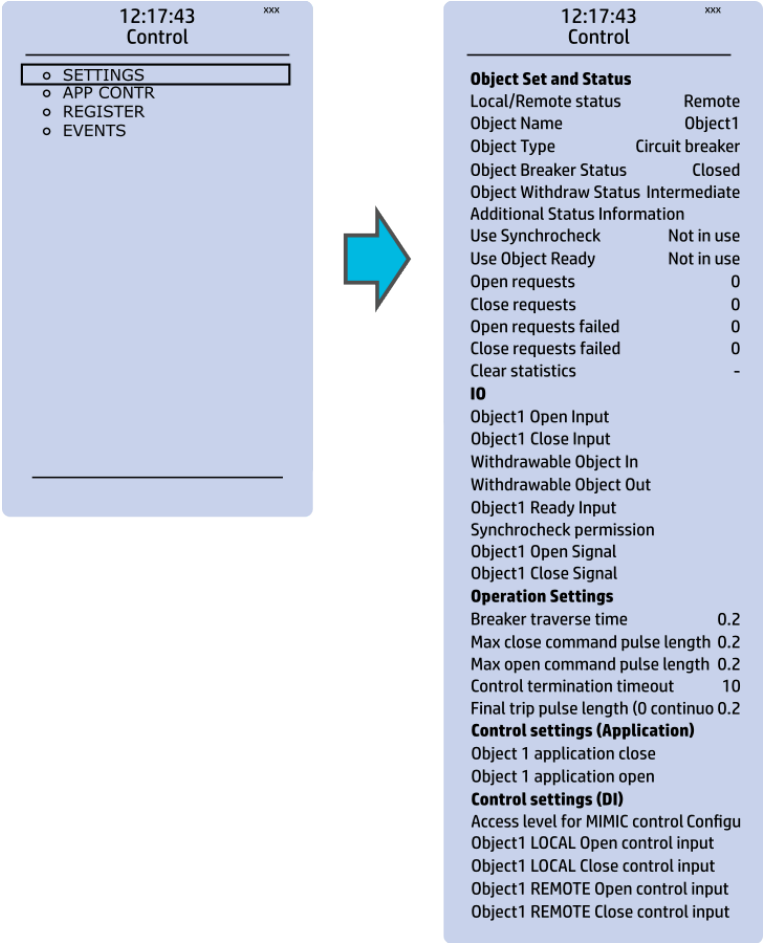

OBJECT SET AND STATUS

- Local/Remote status: control access may be set to Local or Remote (Local by default; please note that when local control is enabled, the object cannot be controlled through the bus and vice versa).
- Object name: the name of the object (objects are named "ObjectX" by default).
- Object type: selects the type of the object from Grounding disconnector, Motor-controlled disconnector, Circuit breaker and Withdrawable circuit breaker (Circuit breaker by default).
- Object x status: the status can be Bad, Closed, Open and Intermediate. The status "Intermediate" is the phase between "Open" and "Closed" where both status inputs are 0. The status "Bad" occurs when both status inputs of the object/cart are 1.
- Additional status information: gives feedback from the object on whether the opening and closing are allowed or blocked, whether the object is ready, and whether the synchronization status is ok.
- Use synchrocheck and Use Object ready: closing the object is forbidden when the sides are not synchronized or when the object is not ready to be closed.
- Open requests and Close requests: displays the statistics, i.e. the number of Open and Close requests.
- Open requests failed and Close requests failed: displays the statistics of Open and Close request failures. A request is considered to have failed when the object does not change its status as a result of that request.
- Clear statistics: statistics can be cleared by choosing "Clear statistics" and then "Clear".

I/O

- An object has both Open input and Close input signals which are used for indicating the status of the breaker on the HMI and in SCADA. Status can be indicated by any of the following: digital inputs, logical inputs or outputs.
- A withdrawable object has both In and Out inputs. The status can be indicated by any of the following: digital inputs, logical inputs or outputs.
- Both Object ready and Synchrocheck permission have status inputs. If either one is used, the input(s) must be active for the device to be able to give the "Object Close" command.
- Object open and Object close signals define which digital output is controlled.

OPERATION SETTINGS

- Breaker traverse time: determines how long a gap there can be between a status change from "Open" to "Closed" before an intermediate status is reported by the function.
- Max close/open command pulse length: defines the maximum length of "Open" and "Close" commands. If the status has changed before the maximum pulse length has elapsed, the pulse is cut short.
- Control termination timeout: If the status of the object does not change during the set time, an "Open/Close request failed" event is recorded.
- After the set delay, if the controlled object does not respond accordingly, the procedure is terminated and a fail message is issued.

CONTROL SETTINGS (APPLICATION)

- Object application close and Object application open: a signal set to these points can be used to open and close the object. Controlling the object through this point does not follow the local/remote status of the device.

CONTROL SETTINGS (DI)

- Access level for MIMIC control: determines the access level required to control the MIMIC (each level has its own password). By default, the access level is set to "Configurator".
- You can use digital inputs to control the object locally or remotely. Remote controlling via the bus is configured on the protocol level.

© Arcteq Relays Ltd

Figure. 4.6 - 22. Application control section.

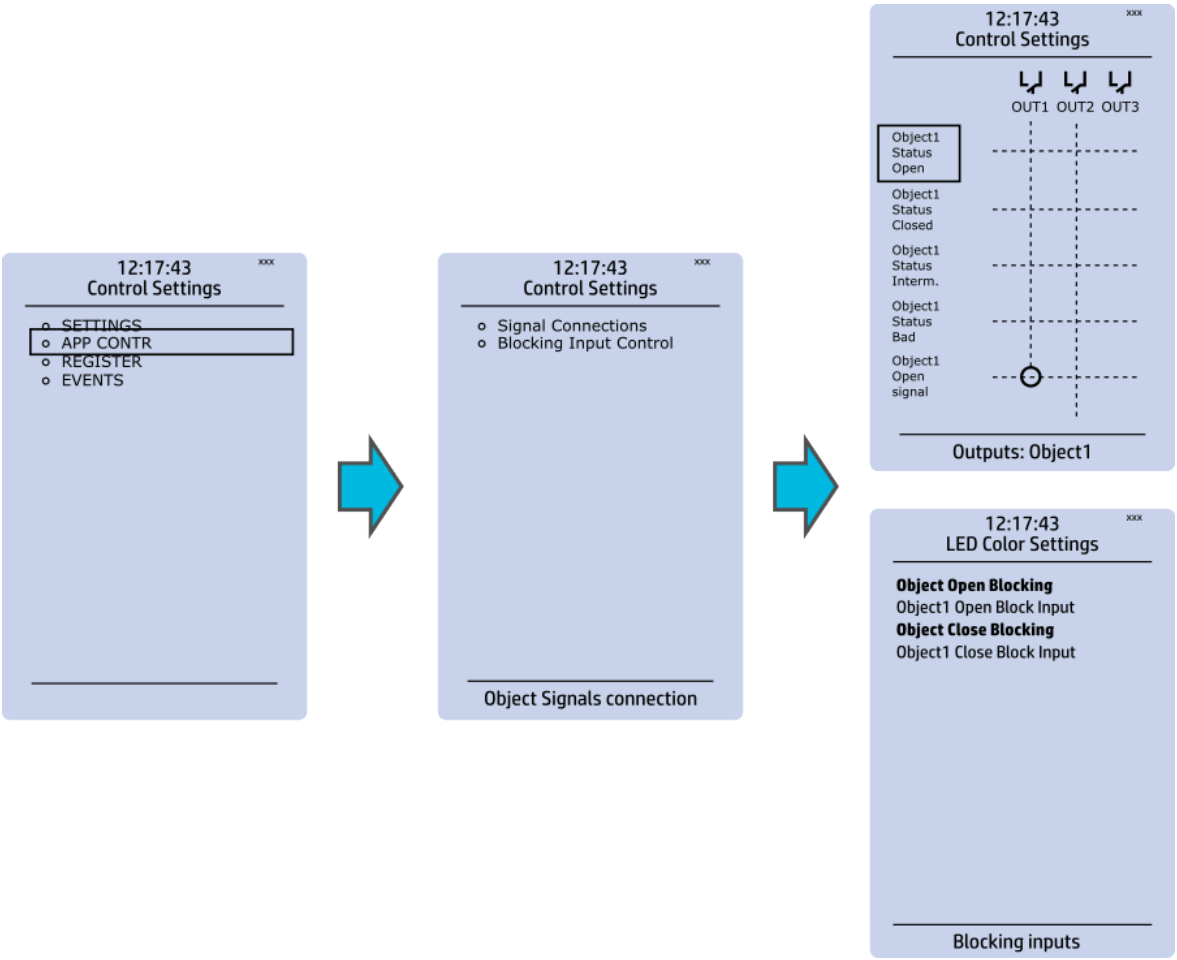

You can connect object statuses directly to specific physical outputs in the "Signal connections" subsection (*Control → Application control*). A status can be connected to output relays, as well as to user-configurable LEDs. A connection to an output can be either latched ("|x|") or non-latched ("x").

Object blocking is done in the "Blocking input control" subsection. It can be done by any of the following: digital inputs, logical inputs or outputs, object status information as well as stage starts, trips or blocks.

Figure. 4.6 - 23. Registers section.

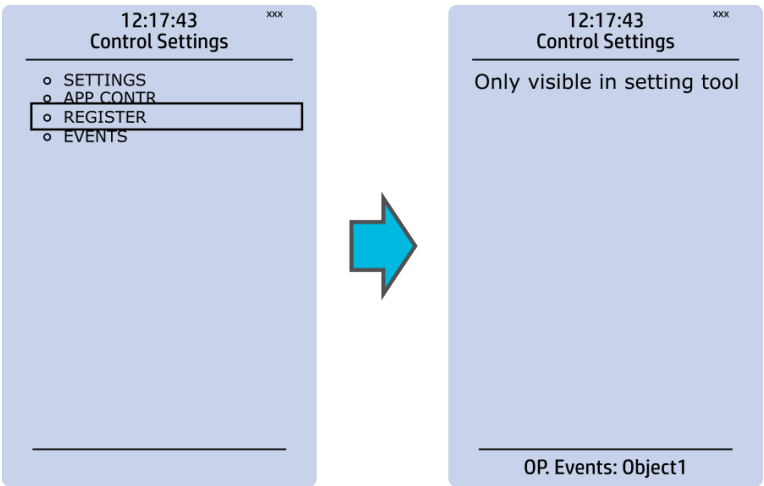

The "Registers"section stores the function's specific fault data. There are twelve (12) registers, and each of them includes data such as opening and closing times, command types and request failures. The data included in the register depend on the protection function. You can clear the the operation register by choosing "Clear registers" → "Clear".

Please note that the content of the *Registers* section is not available in the HMI. It can only be accessed via the AQtivate setting tool.

Figure. 4.6 - 24. Events section.

You can mask on and mask off events related to an object's stage in "Event mask". By default all events are masked off. You can activate the desired events by masking them ("x"). Please remember to save your maskings by confirming the changes with the check mark icon. If you want to cancel the changes, select the strike-through circle to do so. Only masked events are recorded to the event history (which can be accessed in the "Events" view in the user view section).

Control functions

Once a control function has been activated in the *Controls → Controls enabled* submenu, its own submenu can be opened. In the image series below, the user has activated three control functions. The user accesses the list of activated control stages through the "Control functions" module, and selects the control function for further inspection.

Figure. 4.6 - 25. Control functions submenu.

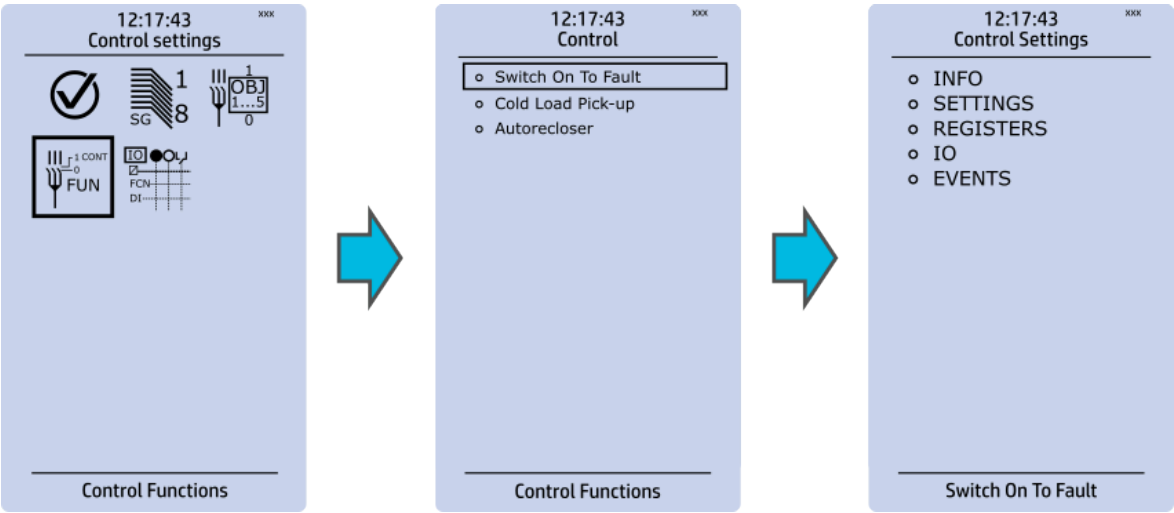

© Arcteq Relays Ltd
IM00014

Each control function that has been activated is listed in the *Control functions* submenu (see the middle image above). This submenu includes the following sections: "Info", "Settings", "Registers", "I/O" and "Events". The text below describes these in further detail.

Figure. 4.6 - 26. Info section.

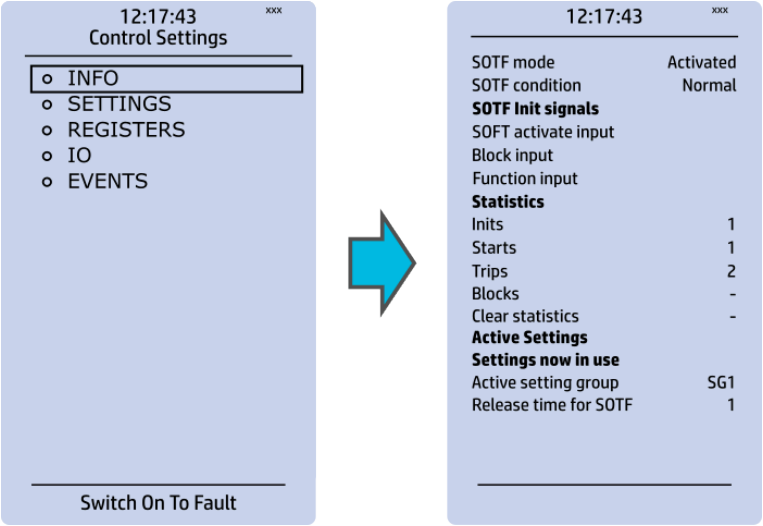

The "Info" section offers many details concerning the function and its status:

- Function condition: indicates the stage's condition which can be Normal, Start, Trip, or Blocked.
- Measured magnitude: In some functions it is possible to choose the monitored magnitude between Peak-to-peak, TRMS, or RMS (the default is RMS; the available magnitudes depend on the function).
- Statistics: indicates the number of function starts, trips and blocks (can be cleared through "Clear statistics" → "Clear").
- Measurements: displays the measurements carried out by the function.
- Active settings: displays the setting group that is currently in use and its settings (other setting groups can be set in the "Settings" section).

While the function is activated and disabled in the *Control* → *Controls enabled* submenu, you can disable the function through the "Info" section (the [function name] mode at the top of the section).

Figure. 4.6 - 27. Settings section.

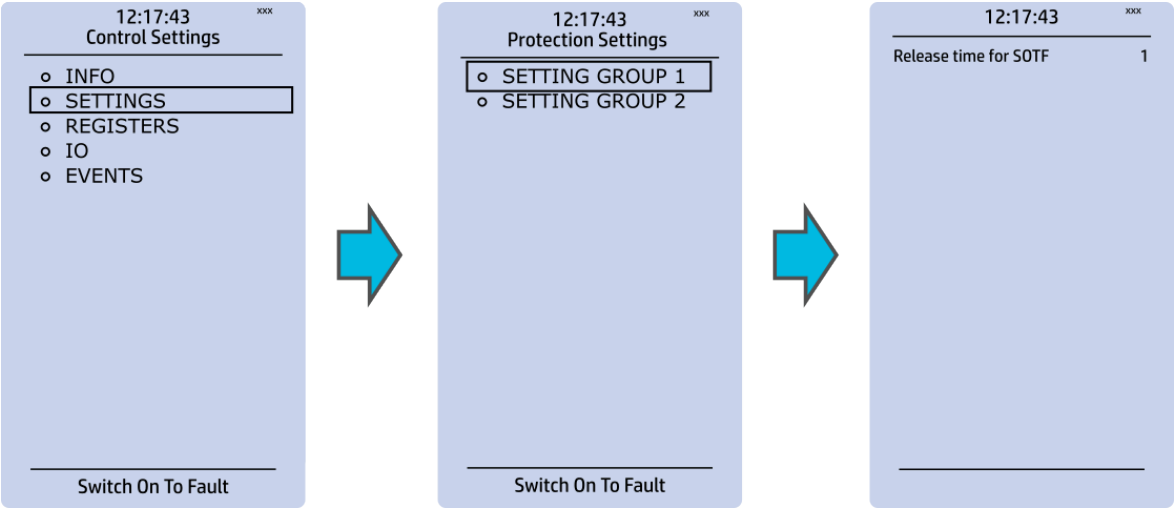

The stage settings vary depending on which control function they are a part of. By default only one setting group of the eight available setting groups is activated. You can enable more groups in the *Control → Setting groups* menu, although they are set here in the "Settings" section.

Figure. 4.6 - 28. Registers section.

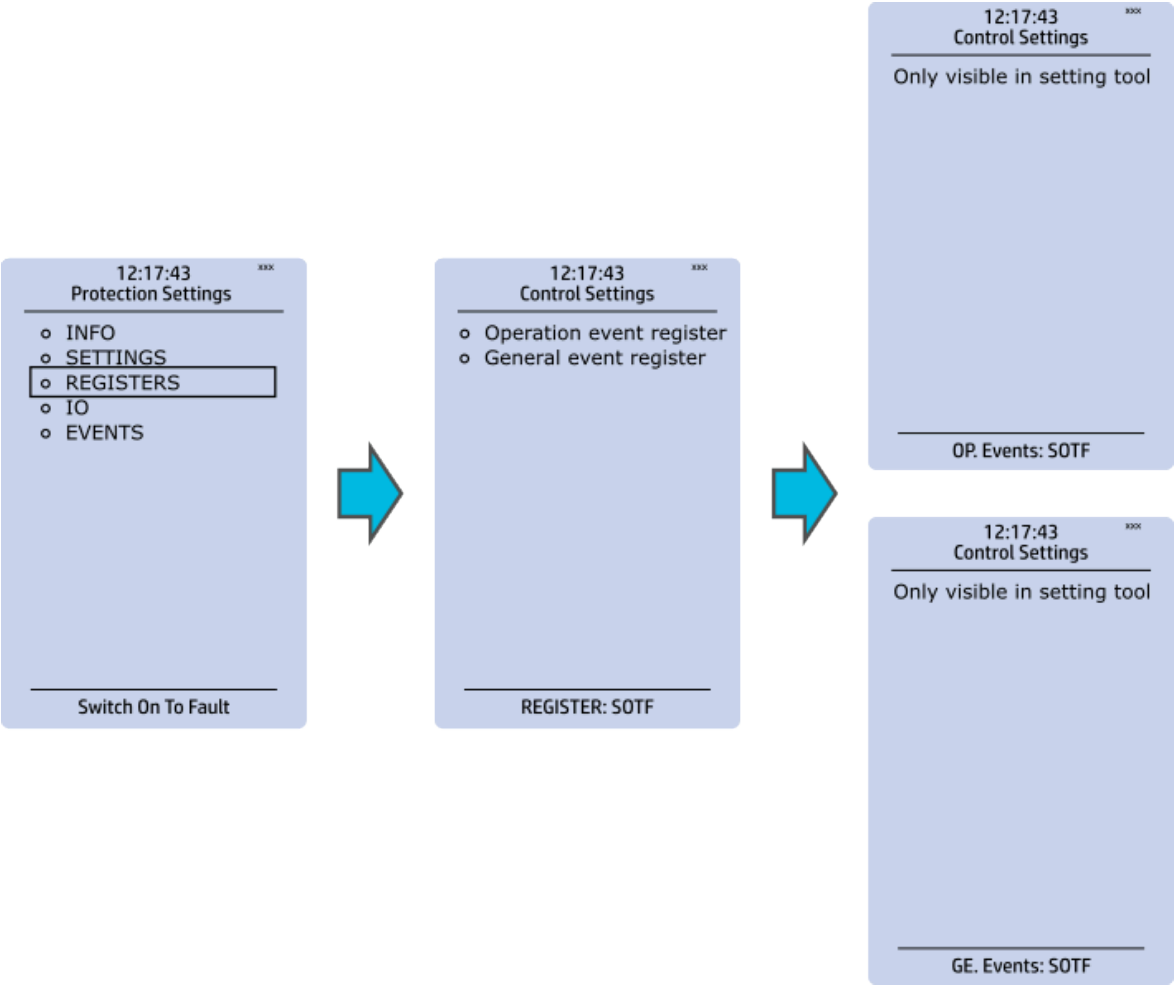

Please note that the content of the "Registers" section is not available in the HMI. It can only be accessed via the AQtivate setting tool. Stored in the "Registers" section you can find both "Operation event register" and "General event register".

"Operation event register" stores the function's specific operation data. There are twelve (12) registers, and each of them includes data like the pre-fault value, the fault value, the time stamp and the active group during the trigger. Data included in the register depend on the control function. You can clear the the operation register by choosing "Clear registers" → "Clear".

"General event register" stores the event generated by the stage. These general event registers cannot be cleared.

© Arcteq Relays Ltd
IM00014

Figure. 4.6 - 29. I/O section.

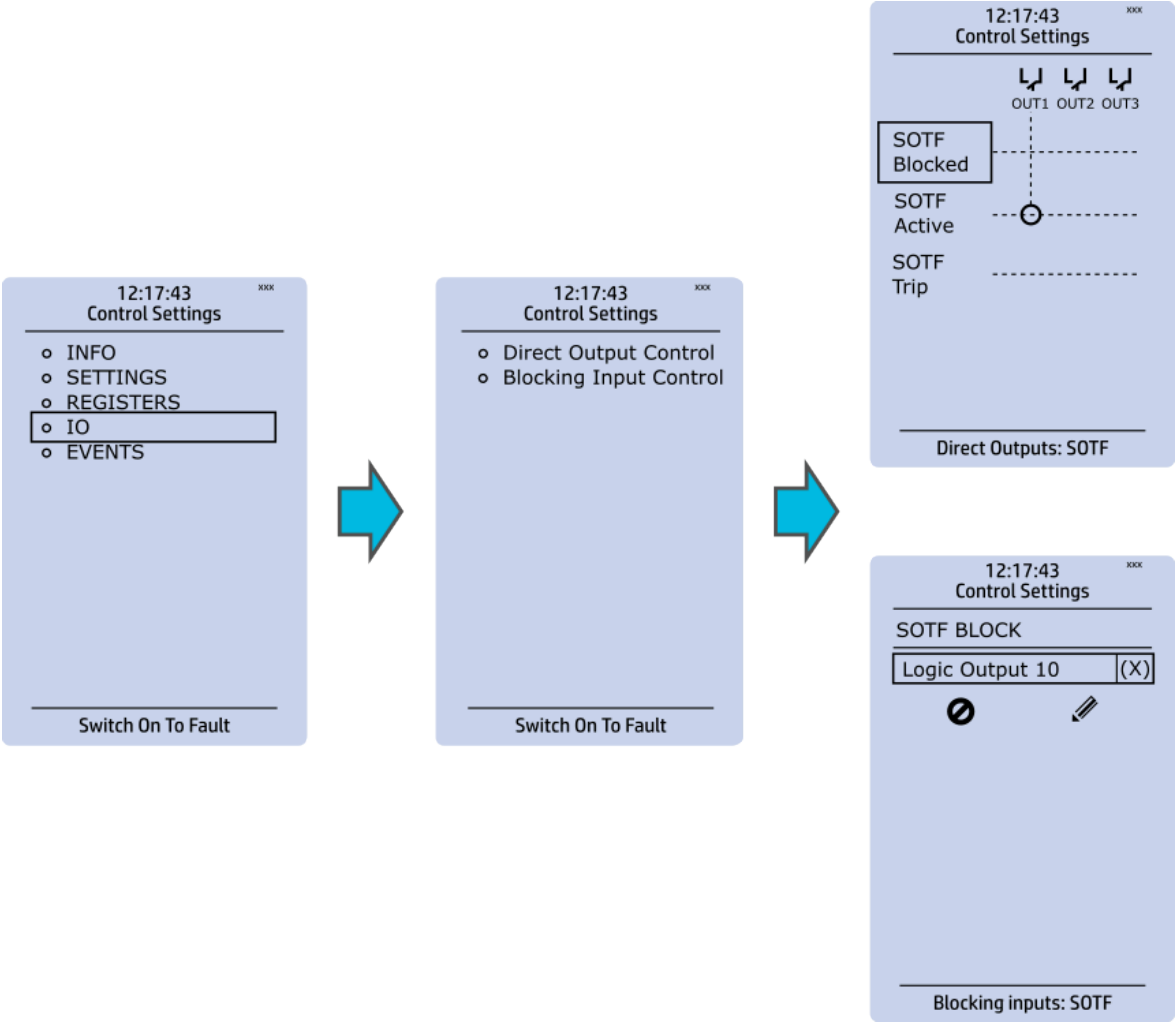

The "I/O" section is divided into two subsections: "Direct output control" and "Blocking input control".

In "Direct output control" you can connect the stage's signals to physical outputs, either to an output relay or an LED (START or TRIP LEDs or one of the 16 user configurable LEDs). If the stage is blocked internally (by a digital input or another signal), you can configure an output to indicate the stage that is blocked. A connection to an output can be either latched ("|x|") or non-latched ("x").

"Blocking input control" allows you to block stages. The blocking can be done by using any of the following:

- digital inputs.
- logical inputs or outputs.
- the START, TRIP or BLOCKED information of another protection stage.
- object status information.

Figure. 4.6 - 30. Events section.

You can mask on and mask off events related to an object's stage in "Event mask". By default all events are masked off. You can activate the desired events by masking them ("x"). Please remember to save your maskings by confirming the changes with the check mark icon. If you want to cancel the changes, select the strike-through circle to do so. Only masked events are recorded to the event history (which can be accessed in the "Events" view in the user view section).

Device I/O

Figure. 4.6 - 31. Device I/O submenu.

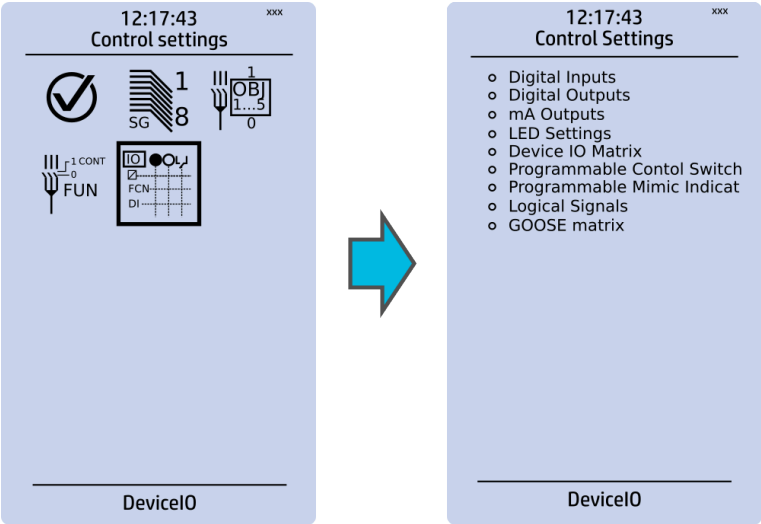

The *Device I/O* submenu is divided into the following nine sections: "Digital inputs", "Digital outputs", "mA Outputs", "LED settings", "Device I/O matrix", "Programmable control switch", "Programmable Mimic Indicator", "Logic signals" and "GOOSE matrix". Please note that digital inputs, logic outputs, protection stage status signals (START, TRIP, BLOCKED, etc.) as well as object status signals can be connected to an output relay or to LEDs in the "Device I/O matrix" section.

© Arcteq Relays Ltd
IM00014

Figure. 4.6 - 32. Digital input section.

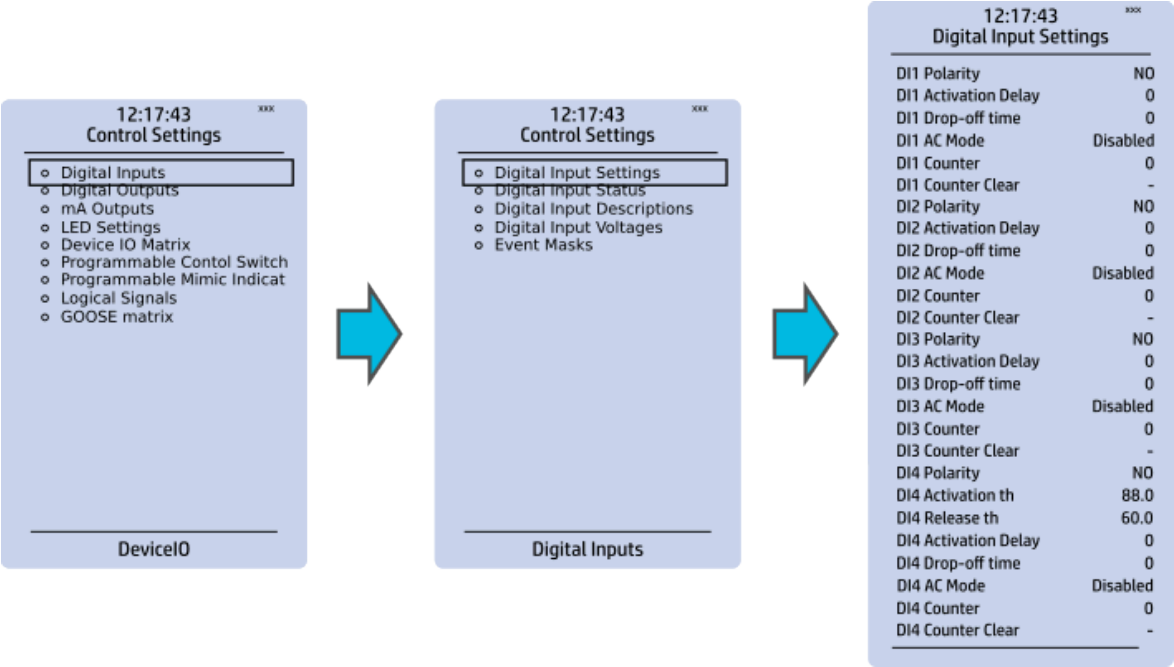

All settings related to digital inputs can be found in the "Digital inputs" section.

The "Digital inputs settings" subsection includes various settings for the inputs: the polarity selection determines whether the input is Normal Open (NO) or Normal Closed (NC) as well as the activation threshold voltage (16…200 V AC/DC, step 0.1 V) and release threshold voltage (10…200 V AC/DC, step 0.1 V) for each available input. There is also a setting to determine the wanted activation and release delay (0…1800 s, step 1 ms). Digital input activation and release threshold follow the measured peak value. The activation time of an input is 5…10 ms. The release time with DC is 5…10 ms, while with AC it is less than 25 ms. The first three digital inputs don't have activation and release threshold voltage settings as these have already been defined when the unit was ordered.

Digital input statuses can be checked from the corresponding subsection ("Digital input status"). The "Digital input descriptions" subsection displays the texts the user has written for each digital input. In the "Event masks" subsection you can determine which events are masked –and therefore recorded into the event history– and which are not.

Figure. 4.6 - 33. Digital outputs section.

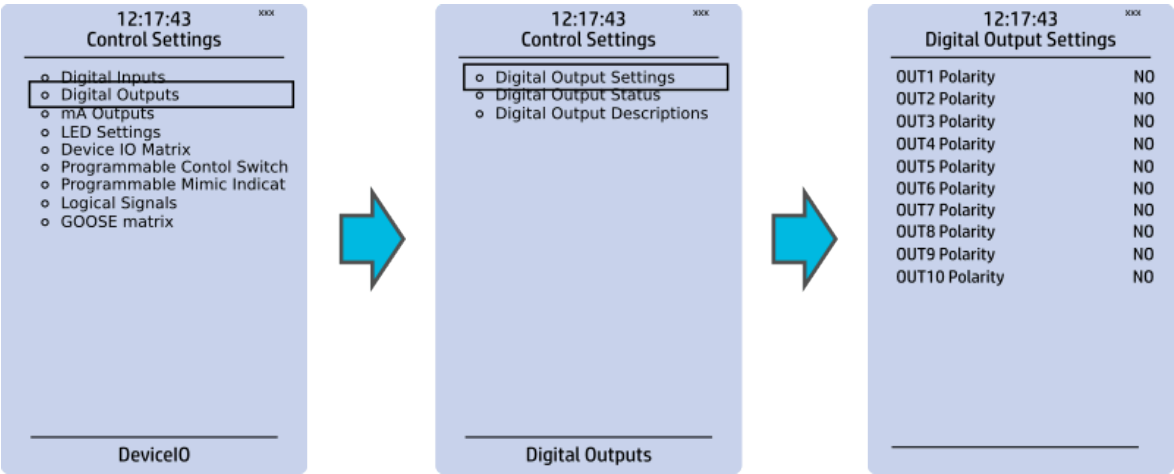

All settings related to digital outputs can be found in the "Digital outputs" section.

The "Digital outputs settings" subsection lets you select the polarity for each output; they can be either Normal Open (NO) or Normal Closed (NC). The default polarity is Normal Open. The operational delay of an output contact is approximately 5 ms. You can view the digital output statuses in the corresponding subsection ("Digital output status"). The "Digital output descriptions" subsection allows you to configure the description text for each output. All name changes affect the matrices as well as input–output selection lists.

NOTICE!
An NC signal goes to the default position (NO) if the device loses the auxiliary voltage or if the system is fully reset. However, an NC signal does not open during voltage or during System full reset. An NC output signal does not open during a Communication or Protection reset.

Figure. 4.6 - 34. LED settings section.

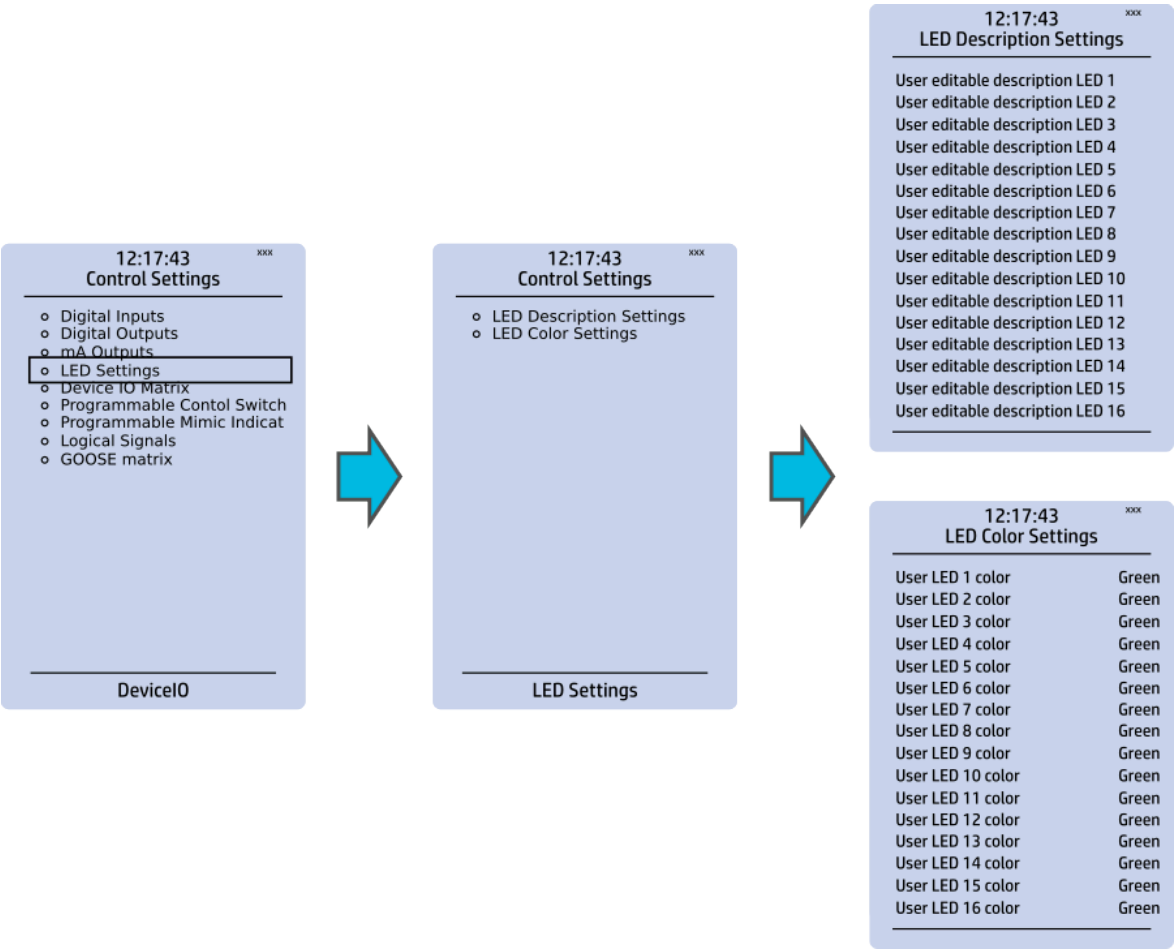

The "LED settings" section allows you to modify the individual label text attached to an LED ("LED description settings"); that label is visible in the LED quick displays and the matrices. You can also modify the color of the LED ("LED color settings") between green and yellow; by default all LEDs are green.

© Arcteq Relays Ltd

Figure. 4.6 - 35. Device I/O matrix section.

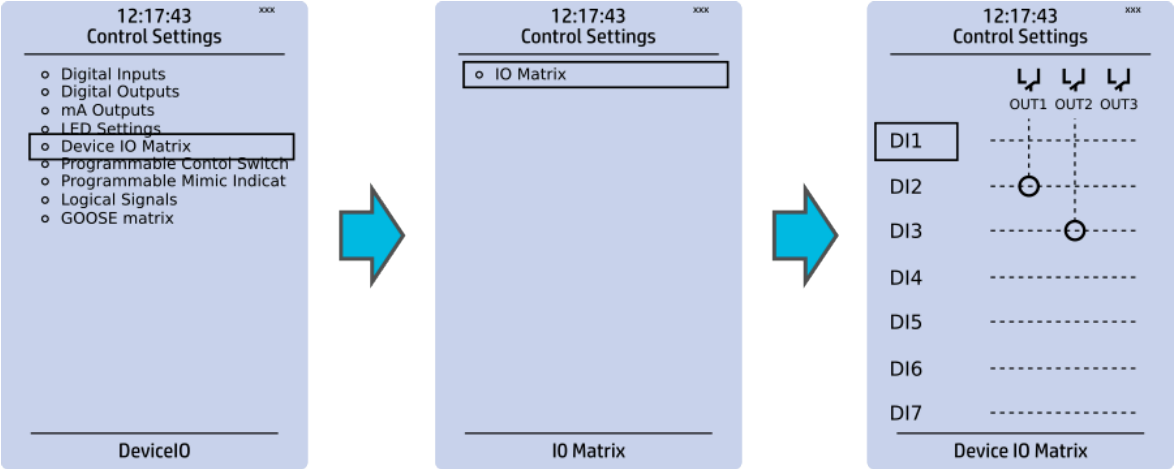

Through the "Device I/O matrix" section you can connect digital inputs, logical outputs, protection stage status signals (START, TRIP, BLOCKED, etc.), object status signals and many other binary signals to output relays, or to LEDs configured by the used. A connection can be latched ("|x|") or non-latched ("x"). Please note that a non-latched output is deactivated immediately when the triggering signal is disabled, while a latched signal stays active until the triggering signal deactivates and the latched function is manually cleared.

You can clear latched signals by entering the mimic display and the pressing the Back button on the panel.

Figure. 4.6 - 36. Programmable control switch section.

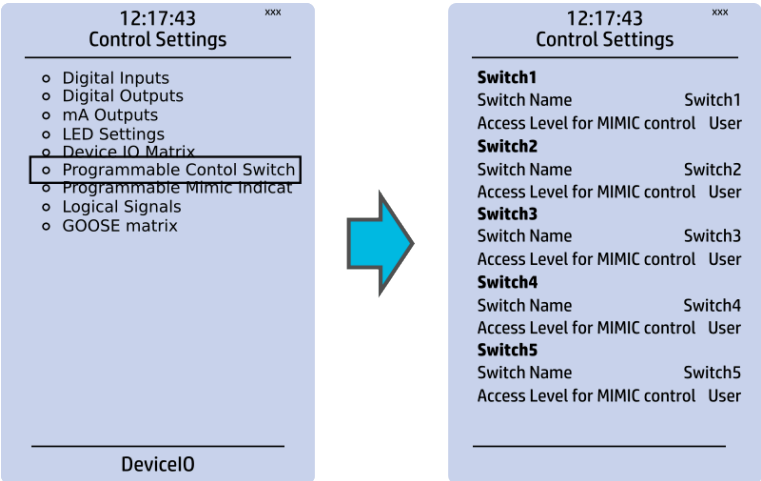

Programmable control switches (PCSs) are switches that can be used to control signals while in the mimic view. These signals can be used in a variety of situations, such as for controlling the logic program, for function blocking, etc. You can name each switch and set the access level to determine who can control the switch.

Figure. 4.6 - 37. Programmable mimic indicators section.

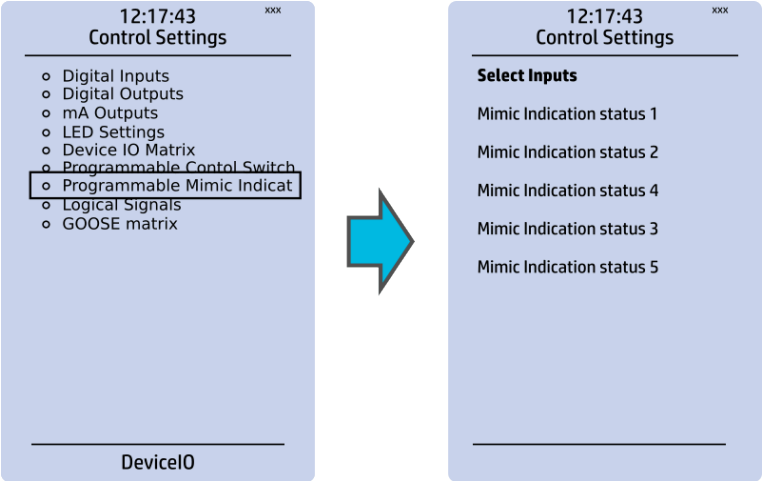

Programmable mimic indicators can be placed into the mimic to display a text based on the status of a given binary signal (digital input, logical signal, status of function start/tripped/blocked signals etc.). When configuring the mimic with the AQtivate 200 setting tool, it is possible to set a text to be shown when an input signal is ON and a separate text for when the signal is OFF.

Figure. 4.6 - 38. Logical signals section.

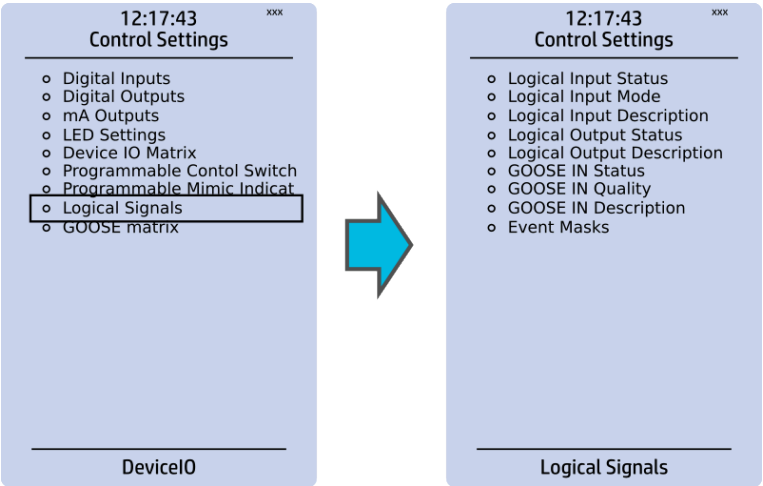

All AQ 200 series units have the following types of logical signals:

- 32 logical input signal status bits; the status of a bit is either 0 or 1.
- 32 logical output signal status bits; the status of a bit is either 0 or 1.
- 64 GOOSE input signal status bits; the status of a bit is either 0 or 1.
- 64 quality bits for GOOSE input signals; the status of a bit is either 0 or 1.

Logical input signals can be used when building a logic with the AQtivate 200 setting tool. The status of a logical input signal can be changed either from the mimic or through SCADA. By default logical inputs use "Hold" mode in which the status changes from 0 to 1 and from 1 to 0 only through user input. The mode of each input can be changed to "Pulse" in which a logical input's status changes from 0 to 1 through user input and then immediately back to 0.

Logical output signals can be used as the end result of a logic that has been built in the AQtivate 200 setting tool. The end result can then be connected to a digital output or a LED in the matrix, block functions and much more.

© Arcteq Relays Ltd
IM00014

GOOSE inputs are mainly used for controlling purposes and in conjunction with the IEC 61850 communication protocol. There are 64 GOOSE inputs signal status bits, and their status can be either 0 or 1. "GOOSE IN quality" checks the quality of a GOOSE input message. There are 64 GOOSE input quality signals, and their status can be either 0 ("Good" or "Valid") or 1 ("Bad" or "Invalid"). Logical outputs can be used when building a programmable logic. Activating a logic gate does not create an event but when a logical output is connected to a logic gate it is possible to create an event from the gate's activation. All logical inputs and outputs have both ON and OFF events, and they can be masked on when necessary (they are masked off by default).

NOTICE!
Please refer to the "Communication" chapter for a more detailed description of the use of logical signals.

4.7 Communication menu

Figure. 4.7 - 39. Communication menu.

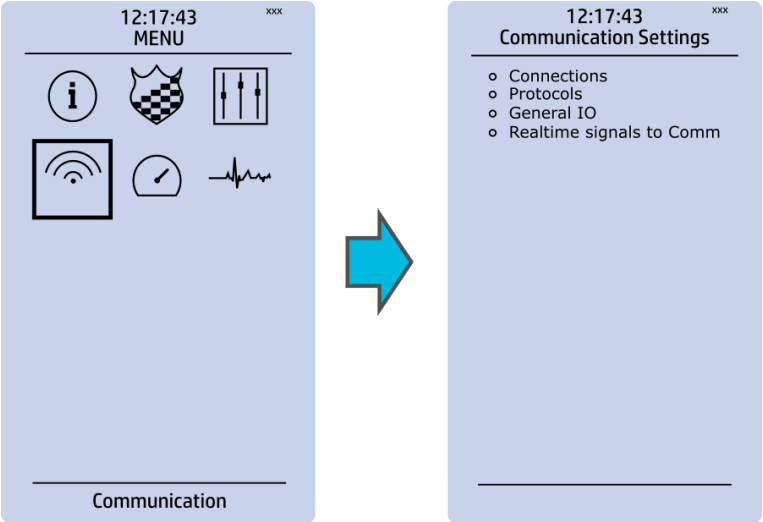

The *Communication* main menu includes four submenus (as seen in the figure above): *Connections*, *Protocols, General IO* and *Realtime signals to Comm*. All devices can be configured through the Ethernet connection in the back panel with the AQtivate 200 setting tool software. Connecting to AQtivate requires knowing the IP address of your device: this can be found in the *Communication → Connections* submenu. As a standard, the devices support the following communication protocols:

- NTP
- IEC 61850
- Modbus/TCP
- Modbus/RTU
- IEC-103
- IEC -101/104
- SPA
- DNP3
- ModbusIO.

Connections

Figure. 4.7 - 40. View of the Connections submenu.

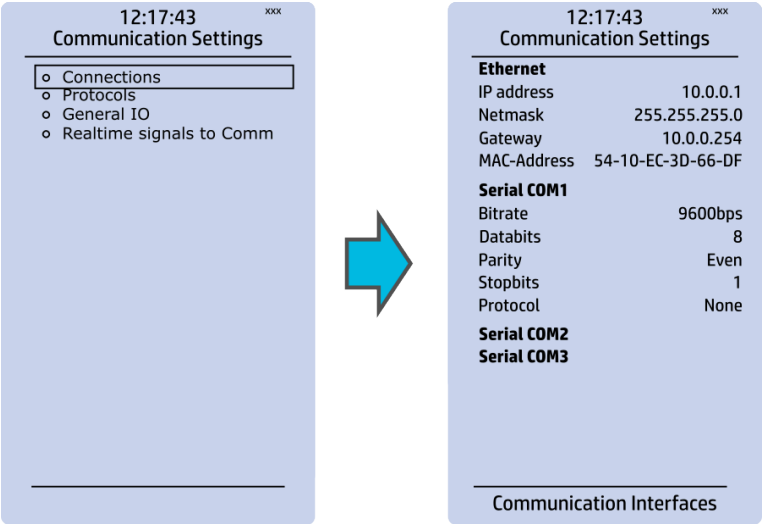

The *Connections* submenu offers the following bits of information and settings:

ETHERNET

This section defines the IP settings for the Ethernet port in the back panel of the unit.

- IP address: the IP address of the device which can be set by the user (the default IP address depends on the device).
- Network: the network subnet mask is entered here.
- Gateway: the gateway is configured only when communicating with devices in a separate subnet.
- MAC-Address: The unique MAC address of the device, which is not configurable by the user.

SERIAL COM

This section defines the basic settings of the RS-485 port in the back panel of the unit.

- Bitrate: displays the bitrate of the RS-485 serial communication interface (9600 bps as standard, although it can be changed to 19,200 bps or to 38,400 bps if an external device supports the faster speed).
- Databits, Parity and Stopbits: these can be set according to the connected external devices.
- Protocol: by default the device does not have any serial protocol activated, although IEC 103, Modbus I/O and Modbus/RTU can be used for communication.

NOTICE!
When communicating with a device via the front Ethernet port connection, the IP address is always 192.168.66.9.

SERIAL COM1 & COM2

SERIAL COM1 and SERIAL COM2 are reserved for serial communication option cards. They have the same settings as the RS-485 port.

© Arcteq Relays Ltd
IM00014

Protocols

Figure. 4.7 - 41. View of the Protocols submenu.

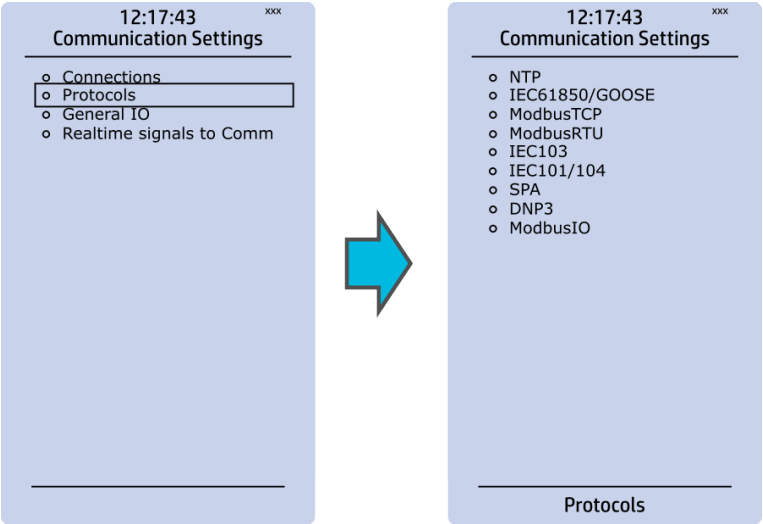

The *Protocols* submenu offers access to the various communication protocol configuration menus. Some of the communication protocols use serial communication and some use Ethernet communication. Serial communication protocols can be used either with the RS-485 port that is in AQ 200 series units by default, or with a serial communication option card. Ethernet communication protocols can be used either with the RJ-45 port in the back of the unit or with an Ethernet communication option card.

The communication protocols are:

- NTP: this protocol is used for time synchronization over Ethernet, and can be used simultaneously with Ethernet-based communication protocols.
- IEC 61850: an Ethernet-based communication protocol.
- Modbus/TCP: an Ethernet-based communication protocol.
- Modbus/RTU: a serial communication protocol.
- IEC-103: a serial communication protocol.
- IEC-101/104: since the standards IEC 60870-5-101 and IEC 60870-5-104 are closely related, the IEC-101 protocol uses serial communication on the physical layer, whereas the IEC-104 protocol uses Ethernet communication.
- SPA: a serial communication protocol.
- DNP3: supports both serial and Ethernet communication.
- ModbusIO: used for connecting external devices like ADAM RTD measurement units.

NOTICE!
Please refer to the "Communication" chapter for a more detailed text on the various communication options.

4.8 Measurement menu

Figure. 4.8 - 42. Measurement section.

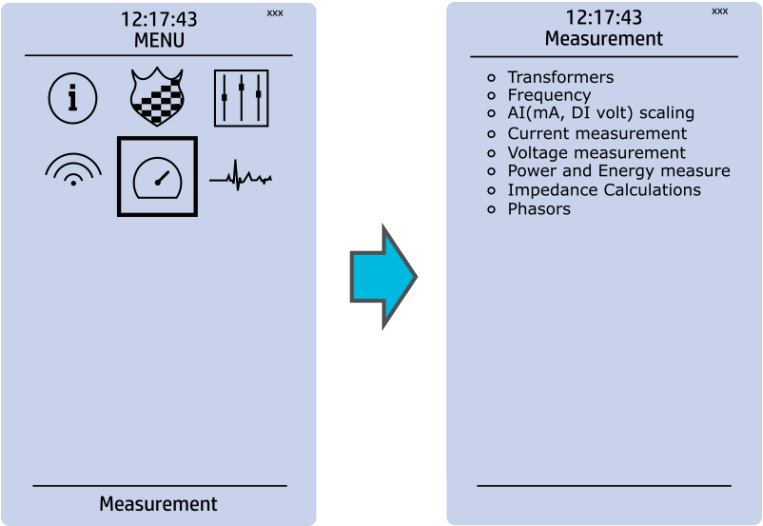

The *Measurement* menu includes the following submenus: *Transformers*, *Frequency*, *Current measurement*, *Voltage measurement*, *Power and energy measurement*, *Impedance calculations*, and *Phasors*. The available measurement submenus depends on the type of device in use. The ratio used by the current and voltage transformers is defined in the *Transformers* submenu, while the system nominal frequency is specified in the *Frequency* submenu. Other submenus are mainly for monitoring purposes.

Transformers

Figure. 4.8 - 43. Transformers section.

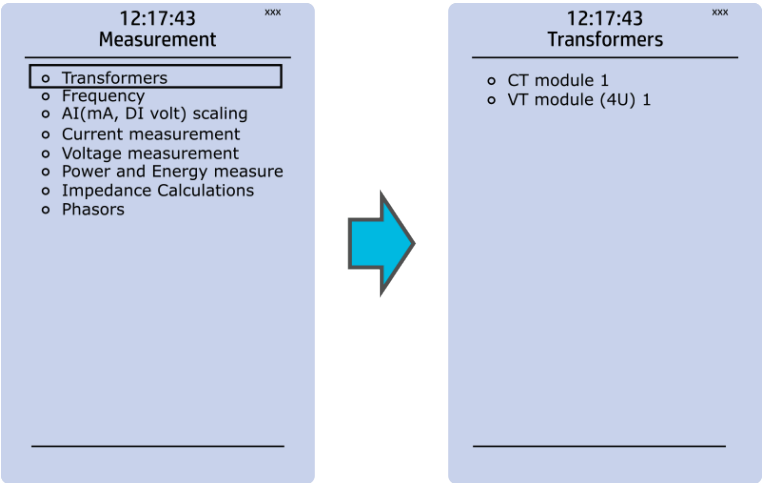

Transformers menu is used for setting up the measurement settings of available current transformer modules or voltage transformer modules. Some unit types have more than one CT or VT module. Some unit types like AQ-S214 do not have current or voltage transformers at all.

© Arcteq Relays Ltd
IM00014

CT module

Figure. 4.8 - 44. CT module section.

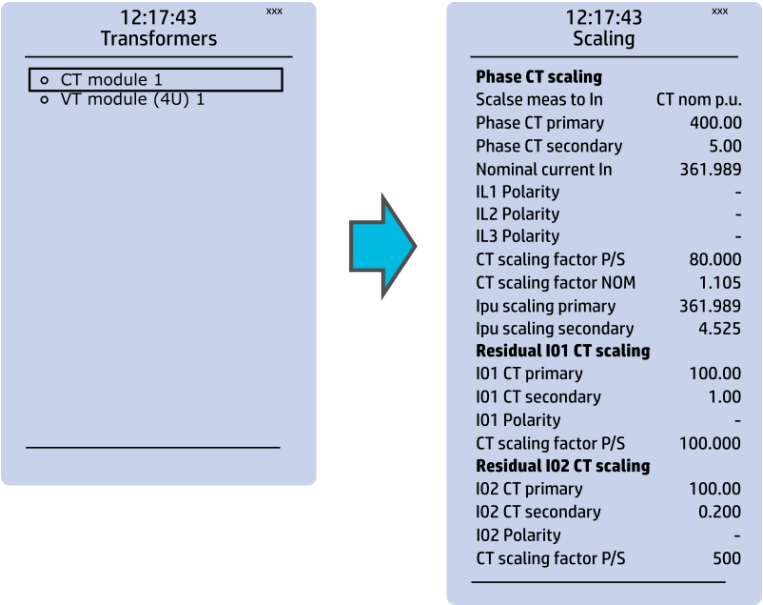

The three main sections ("Phase CT scaling", "Residual I01 CT scaling" and "Residual I02 CT scaling") determine the ratio of the used transformers. Additionally, the nominal values are also determined in the *CT module* submenu. Sometimes a mistake in the wiring can cause the polarity to be changed; in such cases, you can invert the polarity of each phase current individually. The *CT module* submenu also displays additional information such as CT scaling factors and per-unit scaling factors.

VT module

Figure. 4.8 - 45. VT module section.

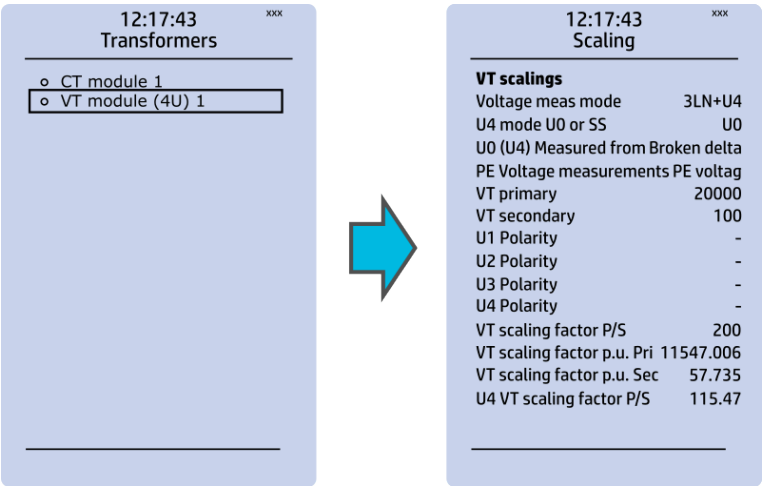

Voltage transformer settings include voltage measurement mode selection, voltage transformer nominal settings and voltage channel polarity switching. Voltage transformer setting defines what kind of voltages are connected to the VT module card. The voltages are: three line-to-line voltages, three line-to-neutral voltages, two line-to-line voltages leaving the third one free as additional voltage channel for neutral voltage or synchrochecking. U4 channel can be set to work as residual voltage mode or "SS" (system set) mode, which can be used for synchrochecking, synchronizing and other uses.

VT primary and secondary voltages must match with the connected voltage transformer in addition to the voltage measurement mode. These settings are then used for scaling the voltage channel input voltages to primary and per unit values as well as power and energy measurement values if current measurements are also available.

Frequency

Figure. 4.8 - 46. Frequency submenu.

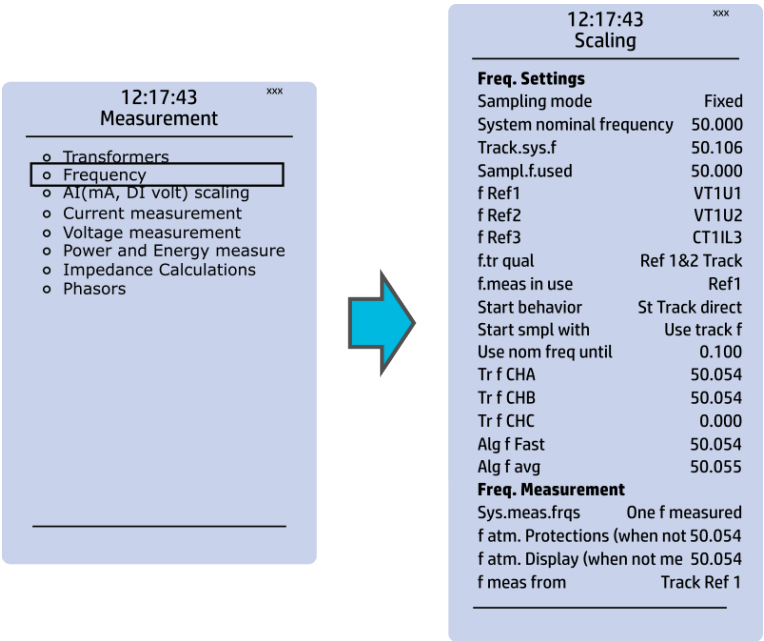

Frequency measurements use the fixed sampling mode as the default, and "System nominal frequency" should be set to the desired level. When "Sampling mode" is set to "Tracking", the device uses the measured frequency value as the system nominal frequency. There are three frequency reference channels: f Ref1, fRef2 and fRef3. With these parameters it is possible to set up three voltage or current channels to be used for frequency sampling. Parameter "f.meas in use" indicates which of the three channels are used for sampling if any.

© Arcteq Relays Ltd
IM00014

Current measurement

Figure. 4.8 - 47. Current measurement submenu.

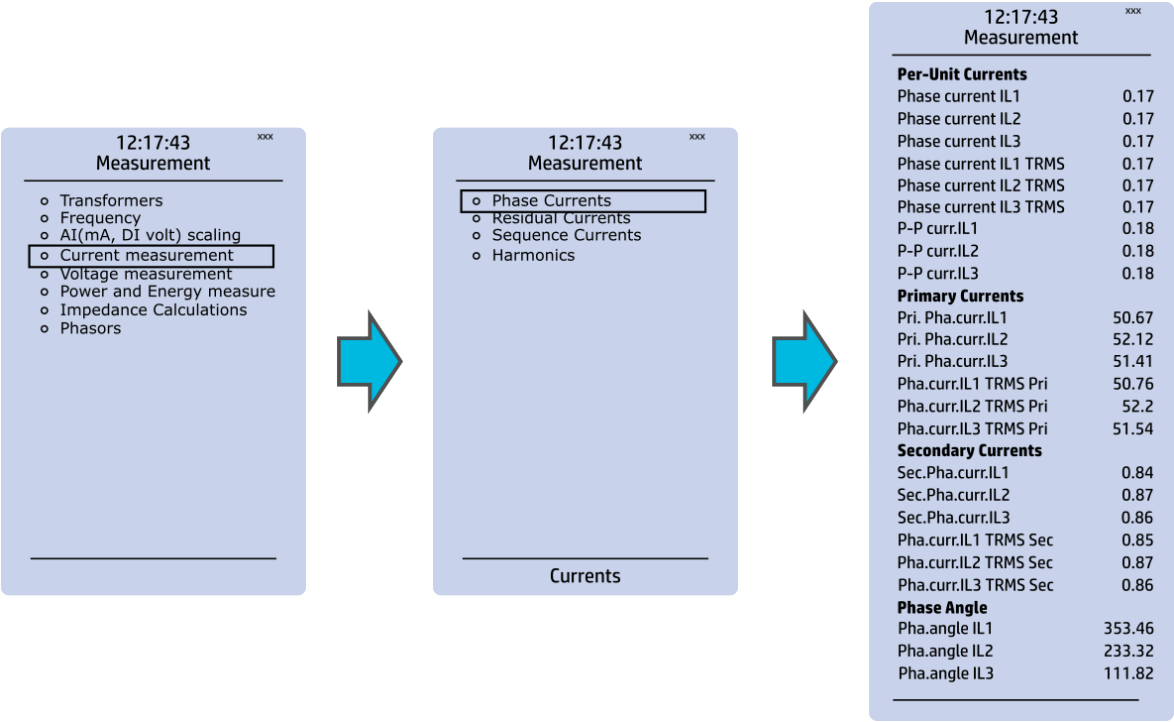

Current measurement submenu includes various individual measurements for each phase or phase-to-phase measurement.

The *Current measurement* submenu has been divided into four sections: "Phase currents", "Residual currents", "Sequence currents", and "Harmonics".

- "Phase currents" and "Residual currents" have been further divided into four subsections ("Per-unit currents", "Primary currents", "Secondary currents" and "Phase angle"), and they display the RMS, TRMS and peak-to-peak values, amplitude and power THD values as well as the angle of each measured component.
- "Sequence currents" has also been further divided into the four above-mentioned sections, and it calculates the positive, negative and zero sequence currents.
- "Harmonics" displays current harmonics up to the 31st harmonic for the three phase current (IL1, IL2, IL3) as well as the two residual currents (I01, I02); each component can be displayed as absolute or percentage values, and as primary or secondary amperages or in per-unit values.

Voltage measurement

Figure. 4.8 - 48. Voltage measurement submenu and System Voltages menu.

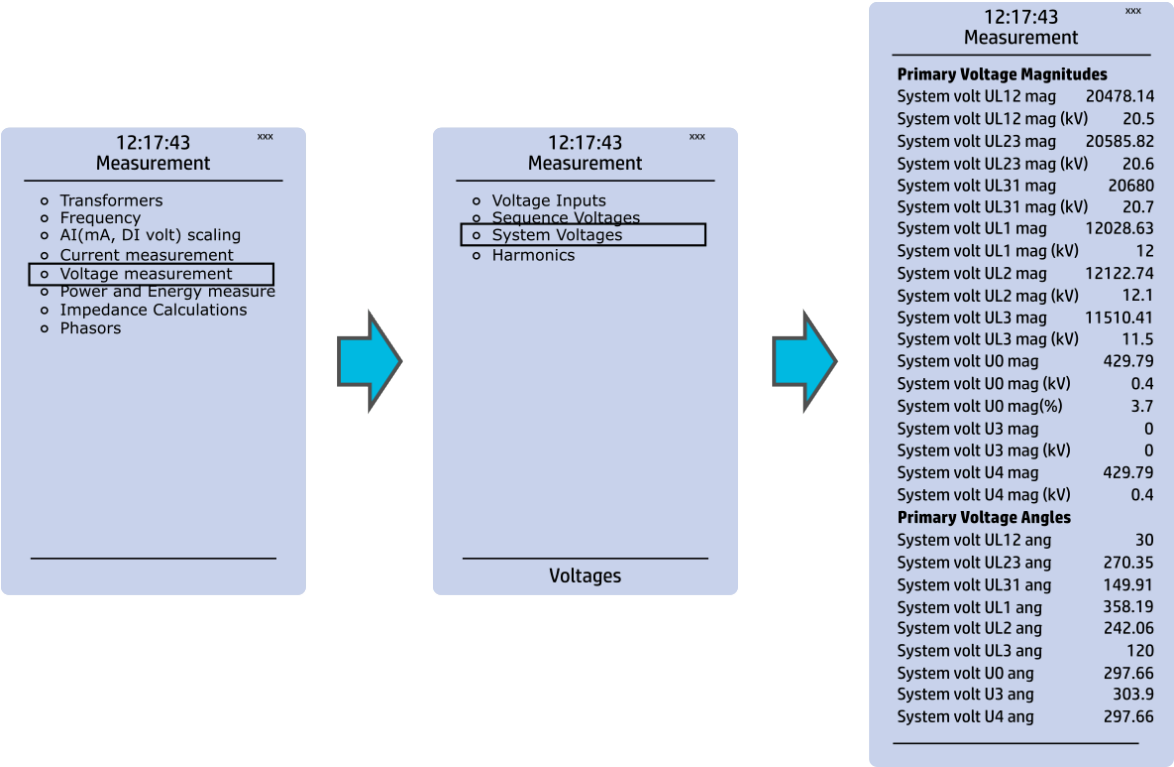

Voltage measurement submenu includes various individual measurements for each phase or phase-to-phase measurement.

The *Voltage measurement* submenu has been also divided into four sections: "Voltage inputs", "Sequence voltages", "System voltages", and "Harmonics".

- "Voltage inputs" displays the values of per-unit and secondary voltages as well as phase angles.
- "Sequence voltages" displays the per-unit, primary and secondary voltages as well as phase angles, and it calculates the positive, negative and zero sequence voltages.
- "System voltages" displays primary voltage magnitudes and primary voltage angles.
- "Harmonics" displays harmonics up to the 31st harmonic for all four voltages (U1, U2, U3, U4); each component can be displayed as absolute or percentage values, and as primary or secondary voltages or in per-unit values.

© Arcteq Relays Ltd
IM00014

Power and energy measurement

Figure. 4.8 - 49. Power and Energy measurement submenu.

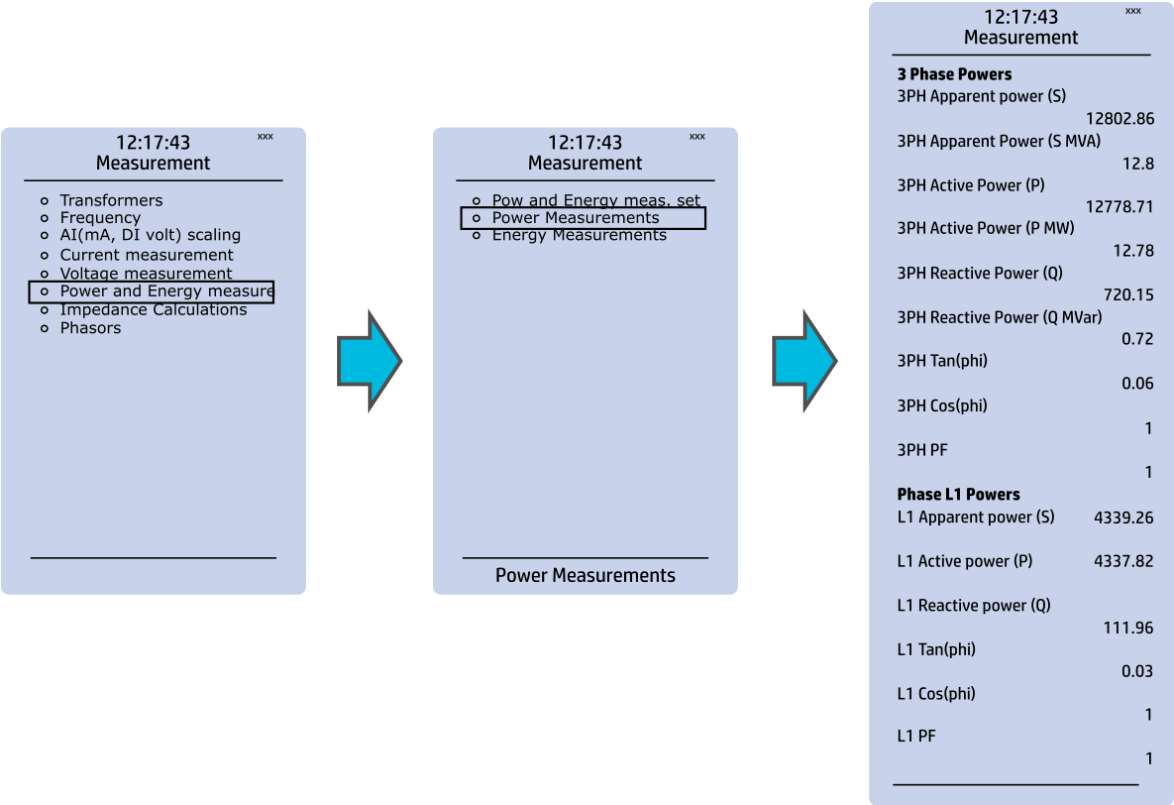

The Power and energy measurement submenu includes three sections: "Power and energy measurement settings", "Power measurements" and "Energy measurements". As the name suggests, the first section determines the settings by which the power and energy calculations are made. In the settings you can also activate (and then set the parameters) for the Energy dose counter mode. "Power measurements" displays all three-phase powers as well as the powers of individual phases. "Energy measurements" displays the three-phase energy as well as the energies of the individual phases.

Impedance calculations

Figure. 4.8 - 50. Impedance calculations submenu.

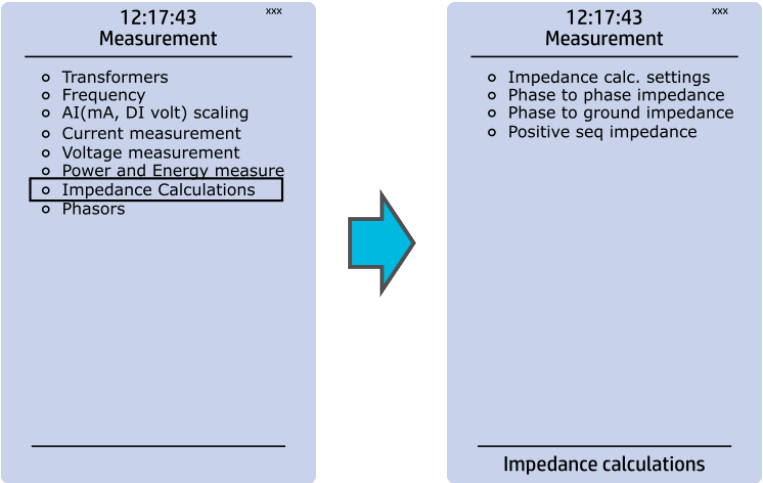

The *Impedance calculations* submenu is divided into four sections: "Impedance calculation settings", "Phase-to-phase impedances", "Phase-to-earth impedances" and "Positive sequence impedance". You can activate impedance calculations in the first section. "Phase-to-phase impedances" display the resistances and reactances of the three phase-to-phase connections, both primary and secondary, as well as the primary and secondary impedances and impedance angles. "Phase-to-earth impedances" displays the resistances and reactances of the three phases as well the primary and secondary impedances and impedance angles. "Positive sequence impedance" displays the resistances and reactances (both primary and secondary) of the positive sequence as well as its primary and secondary impedances and the impedance angle.

Phasors

Figure. 4.8 - 51. Phasors submenu.

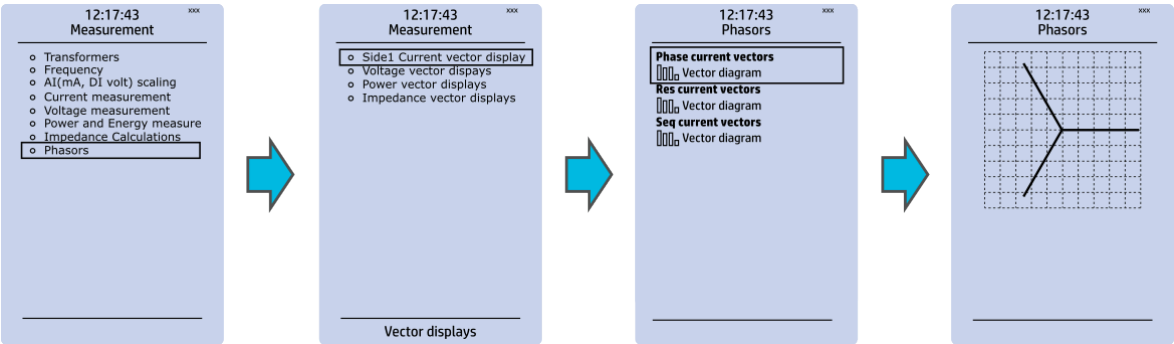

The *Phasors* submenu holds the vector displays for voltages and currents, as well as the various calculated components the device may have (e.g. power, impedance). Phasors are helpful when solving incorrect wiring issues.

4.9 Monitoring menu

The *Monitoring* main menu includes submenus (see the image below) for enabling the various monitoring functions (*Monitors enabled*), setting the various monitoring functions (*Monitor functions*), controlling the disturbance recorder (*Disturbance REC*) and accessing the device diagnostics (*Device diagnostics*). The available monitoring functions depend on the type of the device in use.

Figure. 4.9 - 52. Monitoring menu view.

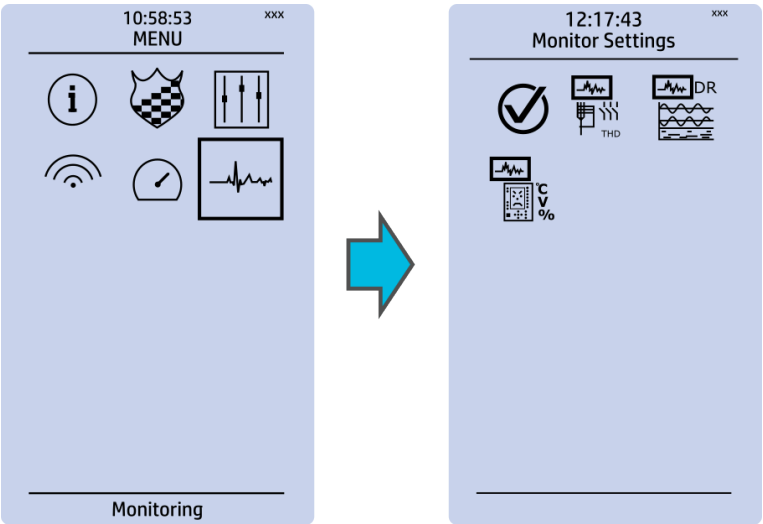

© Arcteq Relays Ltd
IM00014

Monitors enabled

Figure. 4.9 - 53. Monitors enabled submenu.

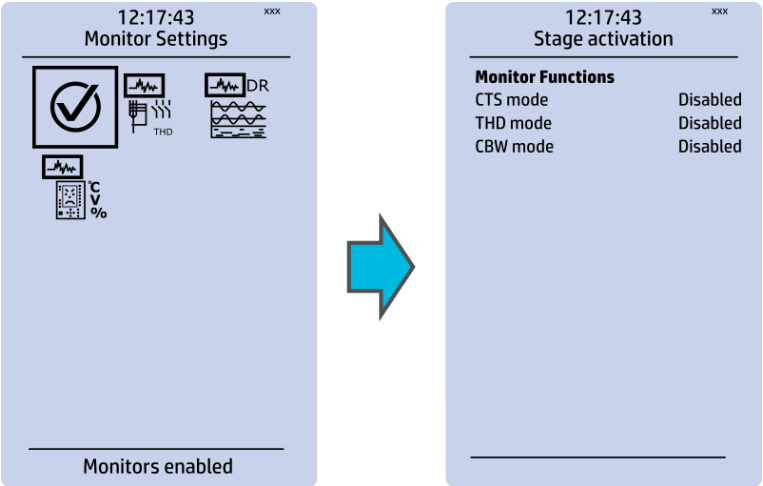

You can activate the selected monitor functions in the *Monitors enabled* submenu. By default all the control functions are disabled. All activated functions can be viewed in the *Monitor functions* submenu (see the section "Monitor functions" below for more information).

Monitor functions

Figure. 4.9 - 54. Monitor function view.

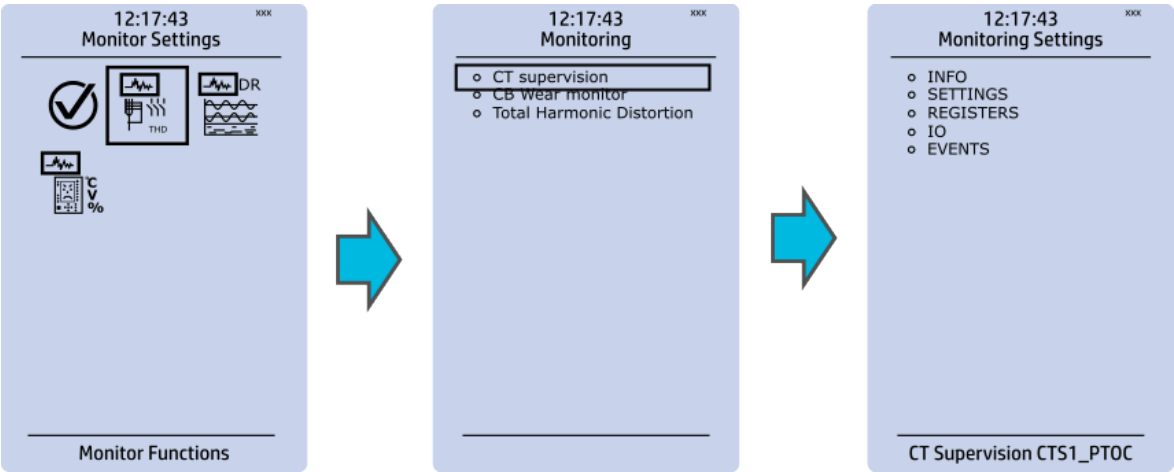

Configuring monitor functions is very similar to configuring protection and control stages. They, too, have the five sections that display information ("Info"), set the parameters ("Settings"), show the inputs and outputs ("I/O") and present the events and registers ("Events" and "Registers").

Disturbance recorder

Figure. 4.9 - 55. Disturbance recorder settings.

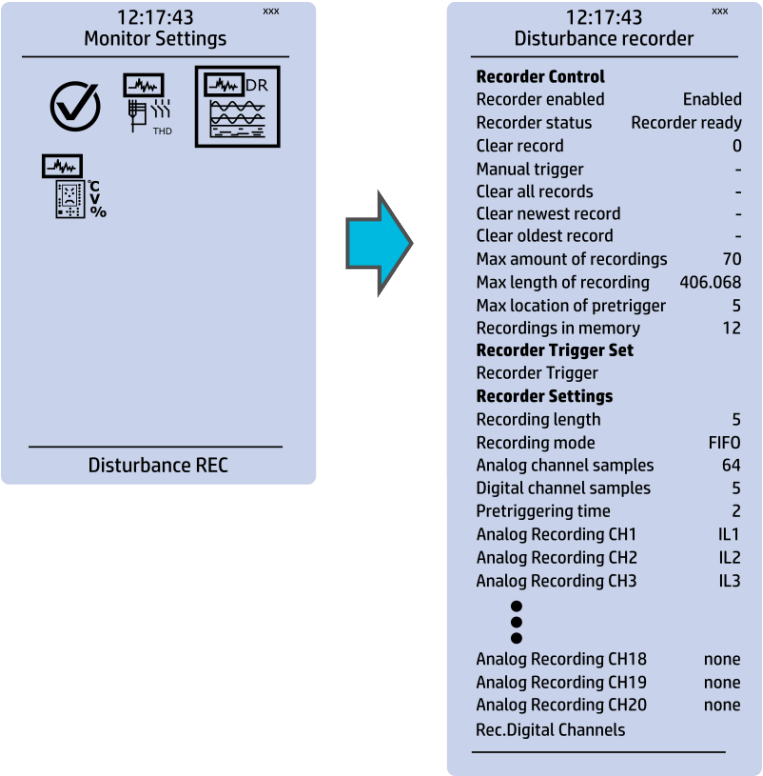

The *Disturbance recorder* submenu has the following settings:

- "Recorder enabled" enables or disables the recorder.
- "Recorder status" indicates the status of the recorder.
- "Clear record" records the chosen record in the memory.
- "Manual trigger" triggers the recorder when set to "Clear". Goes back to "-" when afterwards.
- "Clear all records", "Clear newest record" and "Clear oldest record" allows the clearing of all, the latest, or the oldest recording.
- "Max. amount of recordings" displays the maximum number of recordings; depends on the number of channels, the sample rate and the legnth of the file.
- "Max. length of recording" displays the maximum length of a single recording; depends on the number of chosen channels and the sample rate.
- "Recordings in memory" displays the number of recordings currently in the disturbance recorder's memory.
- "Recorder trigger" shows which signals or other states has been selected to trigger the recording (digital input, logical input or output, signals of a stage, object position, etc.); by default nothing triggers the recorder.
- "Recording length" displays the length of a single recording and can be set between 0.1…1,800.0 seconds.
- "Recording mode" can be selected to replace the oldest recording ("FIFO") or to keep the old recordings ("FILO").
- "Analog channel samples" determines the sample rate of analog channels, and it can be selected to be 8/16/32/62 samples per cycle.
- "Digital channel samples" displays the sample rate in a digital channel; this is a fixed 5 ms.
- "Pretriggering time" can be selected between 0.1…15.0 s.
- The device can record up to 20 (20) analog channels that can be selected from the twenty (20) available channels. Every measured current or voltage signal can be selected to be recorded.

© Arcteq Relays Ltd
IM00014

- Enabling "Auto. get recordings" allows the device to automatically upload recordings to the designated FTP folder (which, in turn, allows any FTP client to read the recordings from the device's memory).
- "Rec. digital channels" is a long list of the possible digital channels that can be recorded (including primary and secondary amplitudes and currents, calculated signals, TRMS values, sequence components, inputs and outputs, etc.).

Device diagnostics

Figure. 4.9 - 56. Device diagnostics submenu.

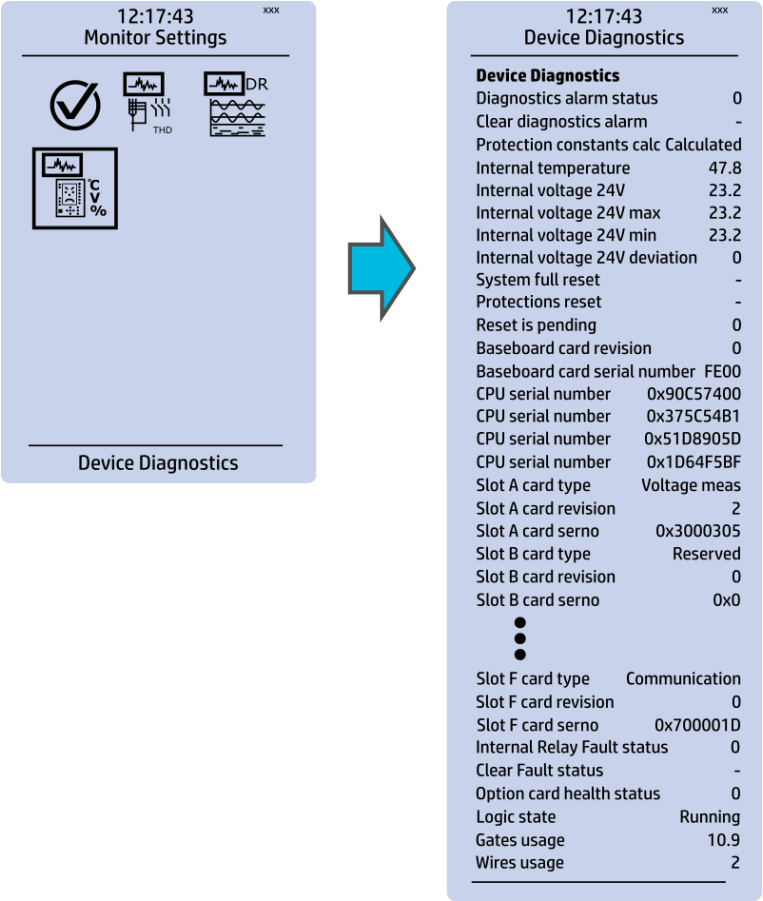

The *Device Diagnostics* submenu gives a detailed feedback of the device's current condition. It also shows whether option cards have been installed correctly without problems. If you see something out of the ordinary in the *Device diagnostics* submenu and cannot reset it, please contact the closest representative of the manufacturer or the manufacturer of the device itself.

4.10 Configuring user levels and their passwords

As a factory default, no user level is locked with a password in a device. In order to activate the different user levels, click the **Lock** button in the device's HMI and set the desired passwords for the different user levels.

> NOTICE!
> Passwords can only be set locally in an HMI.

A number of stars are displayed in the upper right corner of the HMI; these indicate the current user level. The different user levels and their star indicators are as follows (also, see the image below for the HMI view):

- Super user (***)
- Configurator (**)
- Operator (*)
- User (-)

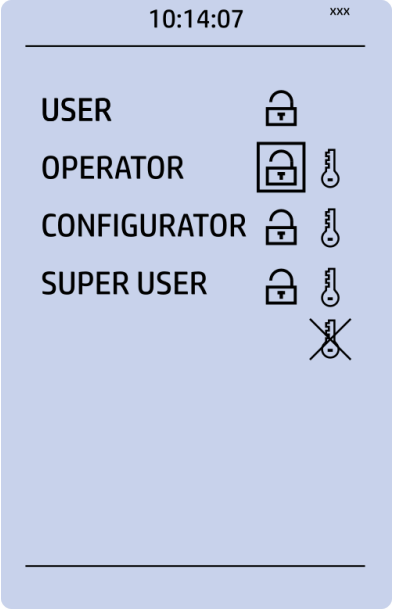

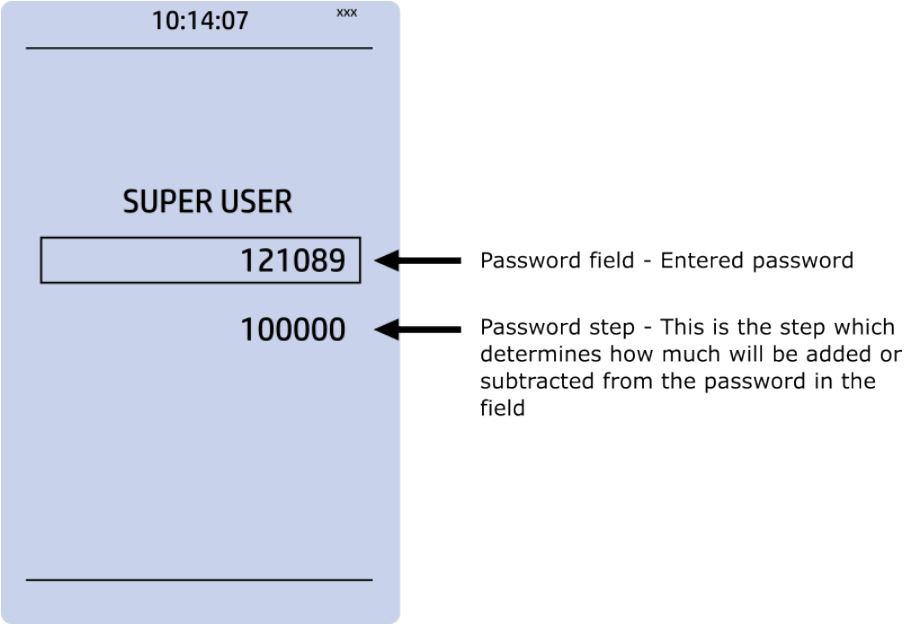

You can set a new password for a user level by selecting the key icon next to the user level's name. After this you can lock the user level by pressing the Return key while the lock is selected. If you need to change the password, you can select the key icon again and give a new password. To remove the password, set the password to "0" (zero). Please note that in order to do this the user level whose password is being changed must be unlocked.

As mentioned above, the access level of the different user levels is indicated by the number of stars. The required access level to change a parameter is indicated with a star (*) symbol if such is required. As a general rule the access levels are divided as follows:

© Arcteq Relays Ltd
IM00014

- *User:* Can view any menus and settings but cannot change any settings, nor operate breakers or other equipment.
- *Operator:* Can view any menus and settings but cannot change any settings BUT can operate breakers and other equipment.
- *Configurator:* Can change most settings such as basic protection pick-up levels or time delays, breaker control functions, signal descriptions etc. and can operate breakers and other equipment.
- *Super user:* Can change any setting and can operate breakers and other equipment.

NOTICE!
Any user level with a password automatically locks itself after half an hour (30 minutes) of inactivity.

5 Functions

5.1 Functions included

5.1.1 Functions included in AQ-F215

The AQ-F215 feeder protection device includes the following functions as well as the number of stages for those functions.

Table. 5.1.1 - 4. Protection functions of AQ-F215.

Name (number of stages)	IEC	ANSI	Description
NOC (4)	I> I>> I>>> I>>>>	50/51	Non-directional overcurrent protection
DOC (4)	Idir> Idir>> Idir>>> Idir>>>>	67	Directional overcurrent protection
VOC (1)	Iv>	51V	Voltage-restrained overcurrent protection
NEF (4)	I0> I0>> I0>>> I0>>>>	50N/51N	Non-directional earth fault protection
DEF (4)	I0dir> I0dir>> I0dir>>> I0dir>>>>	67N/32N	Directional earth fault protection
IEF (1)	I0int>	67NT	Intermittent earth fault protection
OV (4)	U> U>> U>>> U>>>>	59	Overvoltage protection
UV (4)	U< U<< U<<< U<<<<	27	Undervoltage protection
NOV (4)	U0> U0>> U0>>> U0>>>>	59N	Neutral overvoltage protection

© Arcteq Relays Ltd
IM00014

Name (number of stages)	IEC	ANSI	Description
FRQV (8)	f> f>> f>>> f>>>> f< f<< f<<< f<<<<	81O/81U	Overfrequency and underfrequency protection
ROCOF (8)	df/dt>/< (1…8)	81R	Rate-of-change of frequency
CUB (4)	I2> I2>> I2>>> I2>>>>	46/46R/46L	Negative sequence overcurrent/ phase current reversal/ current unbalance protection
VUB (4)	U1/U2>/< U1/U2>>/<< U1/U2>>>/<<< U1/ U2>>>>/<<<<<	47/27P/59PN	Sequence voltage protection
HOC (4)	Ih> Ih>> Ih>>> Ih>>>>	50H/51H/68H	Harmonic overcurrent protection
CBFP (1)	CBFP	50BF/52BF	Circuit breaker failure protection
REF (1)	I0d>	87N	Low-impedance or high-impedance restricted earth fault/cable end differential protection
TOLF (1)	TF>	49F	Line thermal overload protection
PGS (1…10)	PGx>/<	99	Programmable stage
OPW (1)	P>	32O	Overpower protection
UPW (1)	P<	32U	Underpower protection
RPW (1)	Pr	32R	Reverse power protection
RTD (1...16)	-	-	RTD alarms (Resistance temperature detector)
ARC (1)	IArc>/I0Arc>	50Arc/50NArc	Arc fault protection (optional)

Table. 5.1.1 - 5. Control functions of AQ-F215.

Name	IEC	ANSI	Description
SGS	-	-	Setting group selection (8 setting groups available)
OBJ	-	-	Object control and monitoring (5 objects available)
CIN	-	-	Indicator object monitoring (5 indicators available)

Name	IEC	ANSI	Description
CLPU	CLPU	-	Cold load pick-up
NJK	-	79N	Zero sequence recloser
AR	0 → 1	79	Auto-recloser
SOTF	SOTF	-	Switch-on-to-fault
VJP	Δφ	78	Vector jump
SYN	ΔV/Δa/Δf	25	Synchrocheck
PCS	-	-	Programmable control switch

Table. 5.1.1 - 6. Monitoring functions of AQ-F215.

Name	IEC	ANSI	Description
CTS	-	-	Current transformer supervision
VTS	-	60	Voltage transformer supervision
DR	-	-	Disturbance recorder
CBW	-	-	Circuit breaker wear monitor
THD	-	-	Current total harmonic distortion
FLX	-	21FL	Fault locator
MREC	-	-	Measurement recorder
VREC	-	-	Fault register

5.2 Measurements

5.2.1 Current measurement and scaling

The current measurement module (CT module, or CTM) is used for measuring the currents from current transformers. The current measurements are updated every 5 milliseconds. The measured values are processed into the measurement database and they are used by measurement and protection functions. It is essential to understand the concept of current measurements to be able to get correct measurements.

© Arcteq Relays Ltd

Figure. 5.2.1 - 57. Current measurement terminology.

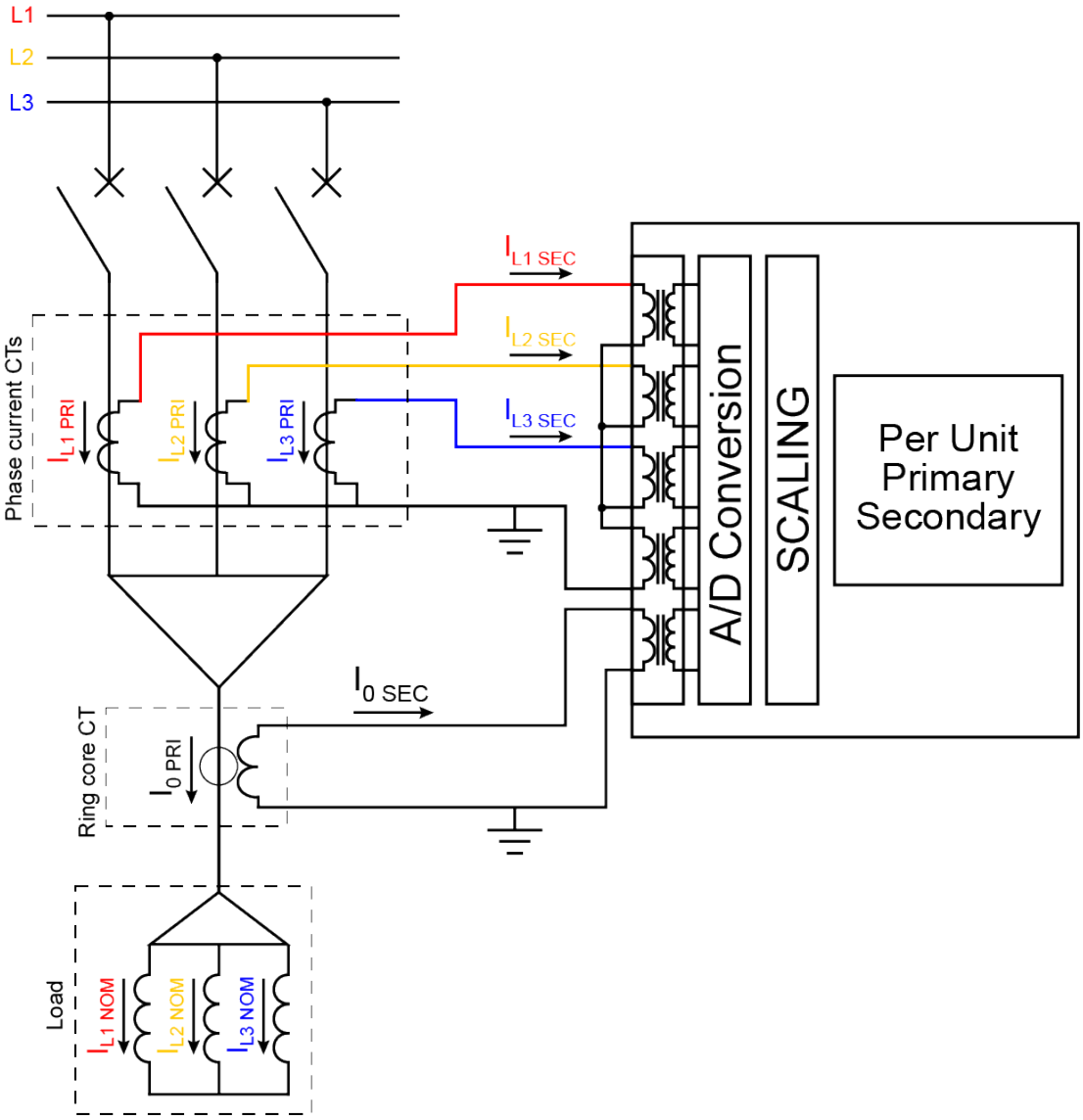

PRI: The primary current, i.e. the current which flows in the primary circuit and through the primary side of the current transformer.

SEC: The secondary current, i.e. the current which the current transformer transforms according to its ratios. This current is measured by the device.

NOM: The nominal primary current of the protected object.

For the measurements to be correct the user needs to ensure that the measurement signals are connected to the correct inputs, that the current direction is connected to the correct polarity, and that the scaling is set according to the nominal values of the current transformer.

The device calculates the scaling factors based on the set values of the CT primary, the CT secondary and the nominal current settings. The device measures the secondary current, the current output from the current transformer installed into application's primary circuit. The rated primary and secondary currents of the CT need to be set for the device to "know" the primary and per-unit values. With motors and other specific electrical apparatus protections, the motor's nominal current should be set for the values to be in per unit with regards to the apparatus nominal instead of the CT nominal. This is not always mandatory as some devices still require manual calculations for the correct settings; however, setting the motors nominal current makes motor protection much easier and more straightforward. In modern protection devices this scaling calculation is done internally after the current transformer's primary current, secondary current and motor nominal current are set.

Normally, the primary current ratings for phase current transformers are 10 A, 12.5 A, 15 A, 20 A, 25 A, 30 A, 40 A, 50 A, 60 A and 75 A as well as their decimal multiples, while the secondary current ratings are 1 A and 5 A. Other, non-standard ratings can be directly connected as the scaling settings are flexible and have large ranges. For example, the ring core current transformer ratings may vary. Ring core current transformers are commonly used for sensitive earth fault protection and their rated secondary current may be as low as 0.2 A in some cases.

The following chapter is an example on how to set the scaling of the current measurements for the selected current transformer and system load.

Example of CT scaling

The following figure presents how CTs are connected to the device's measurement inputs. It also shows example CT ratings and nominal current of the load.

Figure. 5.2.1 - 58. Connections.

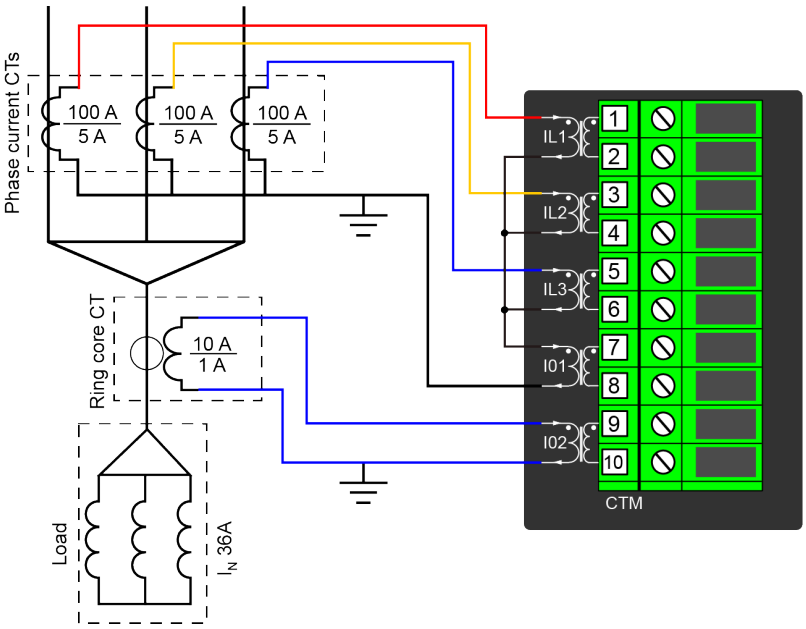

The following table presents the initial data of the connection.

Table. 5.2.1 - 7. Initial data.

Phase current CT: • CT primary: 100 A • CT secondary: 5 A	Ring core CT in Input I02: • I0CT primary: 10 A • I0CT secondary: 1 A	Load (nominal): 36 A

© Arcteq Relays Ltd
IM00014

- The phase currents are connected to the I01 residual via a Holmgren connection.
- The starpoint of the phase current CT's secondary current is towards the line.

Phase CT scaling

Next, to scale the current to per-unit values, we have to select whether the basis of the phase CT scaling is the protected object's nominal current or the CT primary value.

If the CT values are chosen to be the basis for the per-unit scaling, the option "CT nom. p.u." is selected for the "Scale meas to In" setting (see the image below).

Figure. 5.2.1 - 59. Setting the phase current transformer scalings to CT nominal.

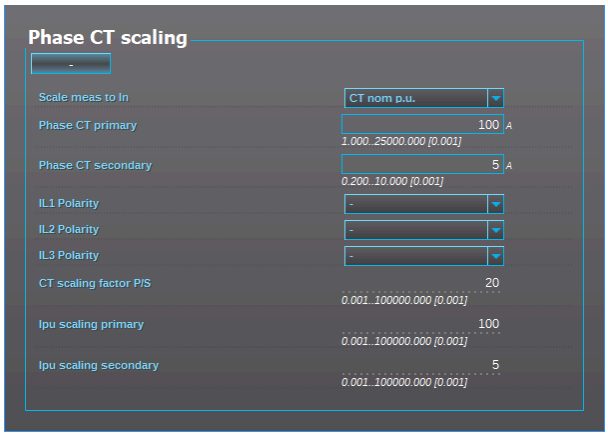

Once the setting have been sent to the device, device calculates the scaling factors and displays them for the user. The "CT scaling factor P/S" describes the ratio between the primary current and the secondary current. The per-unit scaling factors ("Ipu scaling") for both primary and secondary values are also displayed (in this case they are the set primary and secondary currents of the CT).

If the protected object's nominal current is chosen to be the basis for the per-unit scaling, the option "Object in p.u." is selected for the "Scale meas to In" setting (see the image below).

Figure. 5.2.1 - 60. Setting the phase current transformer scalings to the protected object's nominal current.

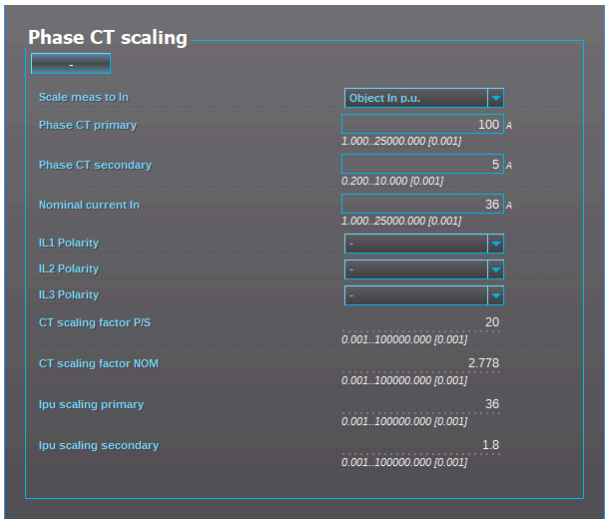

Once the measurement scaling is tied to the protected object's nominal current, the user must set the appropriate input for the "Nominal current In" setting. One can now see the differences between the two scaling options (CT nominal vs. object nominal). The "CT scaling factor P/S" is the direct ratio between the set CT current values, and the "CT scaling factor NOM" is now the ratio between the set CT primary and the nominal current. The "Ipu scaling primary" is now equal to the set nominal current, and the "Ipu scaling secondary" is the ratio between the nominal current and the "CT scaling factor P/S".

Residual I0 CT scaling

Next, we set the residual IO CT scalings according to how the phase current CTs and the ring core CT are connected to the module (see the Connections image at the beginning of this chapter).

The phase current CTs are connected to the module via a Holmgren (summing) connection, which requires the use of coarse residual current measurement settings: the "I01 CT" settings are set according to the phase current CTs' ratings (100/5 A).

Figure. 5.2.1 - 61. Residual I01 CT scaling (coarse).

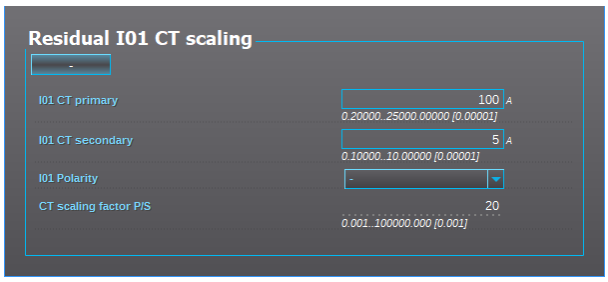

The ring core CT is connected to the CTM directly, which requires the use of sensitive residual current measurement settings: the "I02 CT" settings are set according to the ring core CT's ratings (10/1 A).

Figure. 5.2.1 - 62. Residual I02 CT scaling (sensitive).

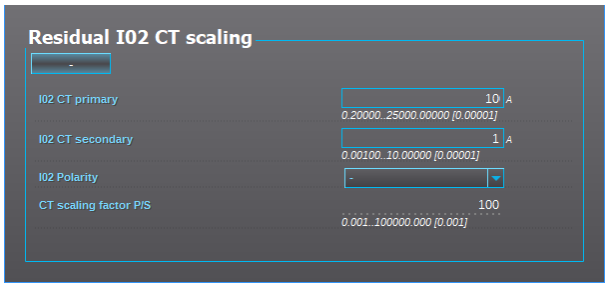

Displaying the scaling

Depending on whether the scaling was done based on the CT primary values or the protected object's nominal current, the measurements are displayed slightly differently. The first of the two images shows how the measurements are displayed when the CT primary values are the basis for the scaling; the second shows them when the protected object's nominal current is the basis for the scaling.

© Arcteq Relays Ltd
IM00014

Figure. 5.2.1 - 63. Scalings display (based on the CT nominal).

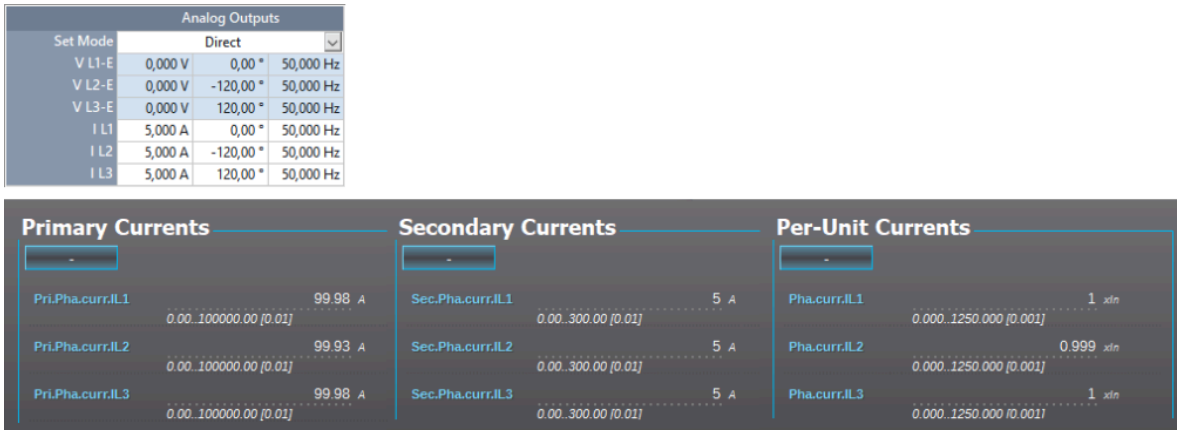

Figure. 5.2.1 - 64. Scalings display (based on the protected object's nominal current).

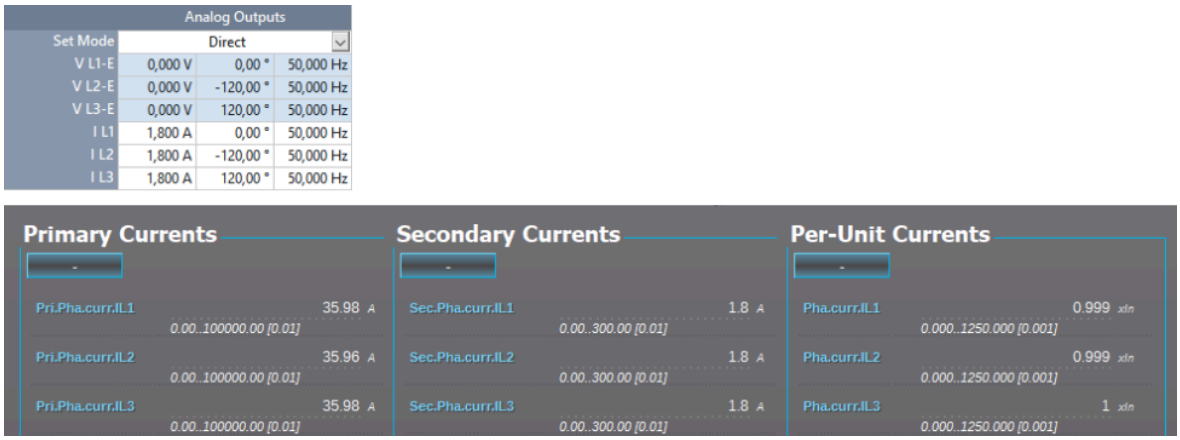

As the images above show, the scaling selection does not affect how primary and secondary currents are displayed (as actual values). The only effect is that the per-unit system in the device is scaled either to the CT nominal or to the object nominal, making the settings input straightforward.

Example of zero sequence CT scaling

Zero sequence CT scaling (ZCT scaling) is done when a zero sequence CT instead of a ring core CT is part of the measurement connection. In such a case the zero sequence CT should be connected to the I02 channel which has lower CT scaling ranges (see the image below).

Figure. 5.2.1 - 65. Connections of ZCT scaling.

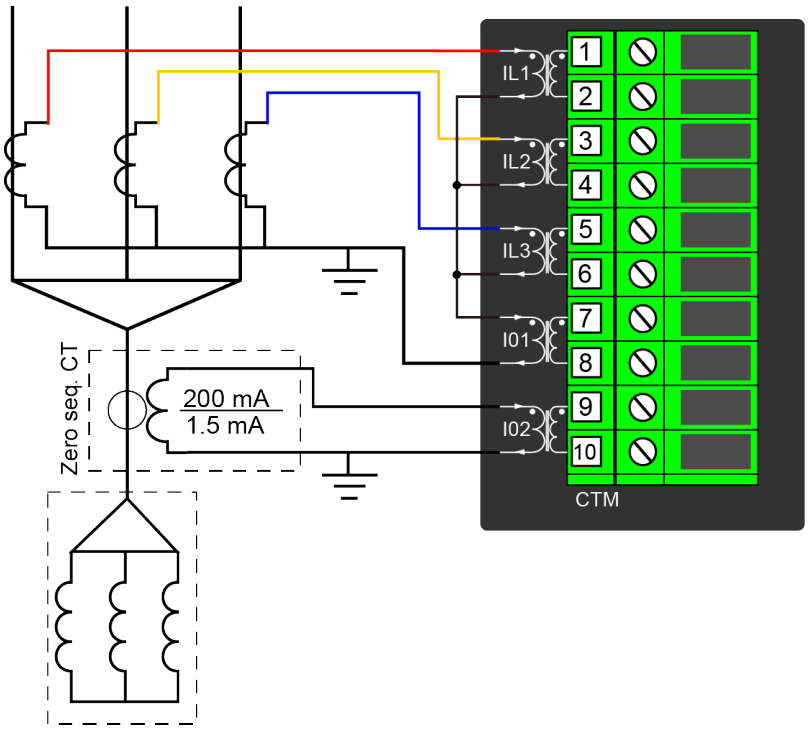

Troubleshooting

When the measured current values differ from the expected current values, the following table offers possible solutions for the problems.

WARNING!
If you work with energized CTs, extreme caution needs to be taken when checking the connections! An opened CT secondary circuit may generate dangerously high voltages. A "buzzing" sound from the connector can indicate an open circuit.

Problem	Solution
The measured current amplitude in all phases does not match the injected current.	The scaling settings may be wrong, check that the settings match with the connected current transformer (*Measurement → Transformers → Phase CT scaling*). Also check that the "Scale meas. to In" is set accordingly. If possible, check the actual CTs and their ratings as there may have been a need to change the original plan.
The measured current amplitude does not match one of the measured phases./ The calculated I0 is measured even though it should not.	Check the wiring connections between the injection device or the CTs and the device.

© Arcteq Relays Ltd
IM00014

Problem	Solution
The measured current amplitudes are OK but the angles are strange./ The phase unbalance protection trips immediately after activation./ The earth fault protection trips immediately after activation.	The phase currents are connected to the measurement module but the order or polarity of one or all phases is incorrect. In device settings, go to *Measurement → Phasors* and check the "Phase current vectors" diagram. When all connections are correct, the diagram (symmetric feeding) should look like this: 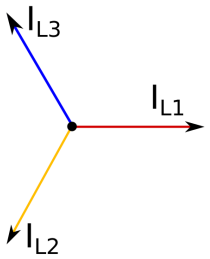 See the following tables for the most common problems with phase polarity and network rotation (mixed phases).

The following image presents the most common problems with phase polarity. Problems with phase polarity are easy to find because the vector diagram points towards the opposite polarity when a phase has been incorrectly connected.

Figure. 5.2.1 - 66. Common phase polarity problems.

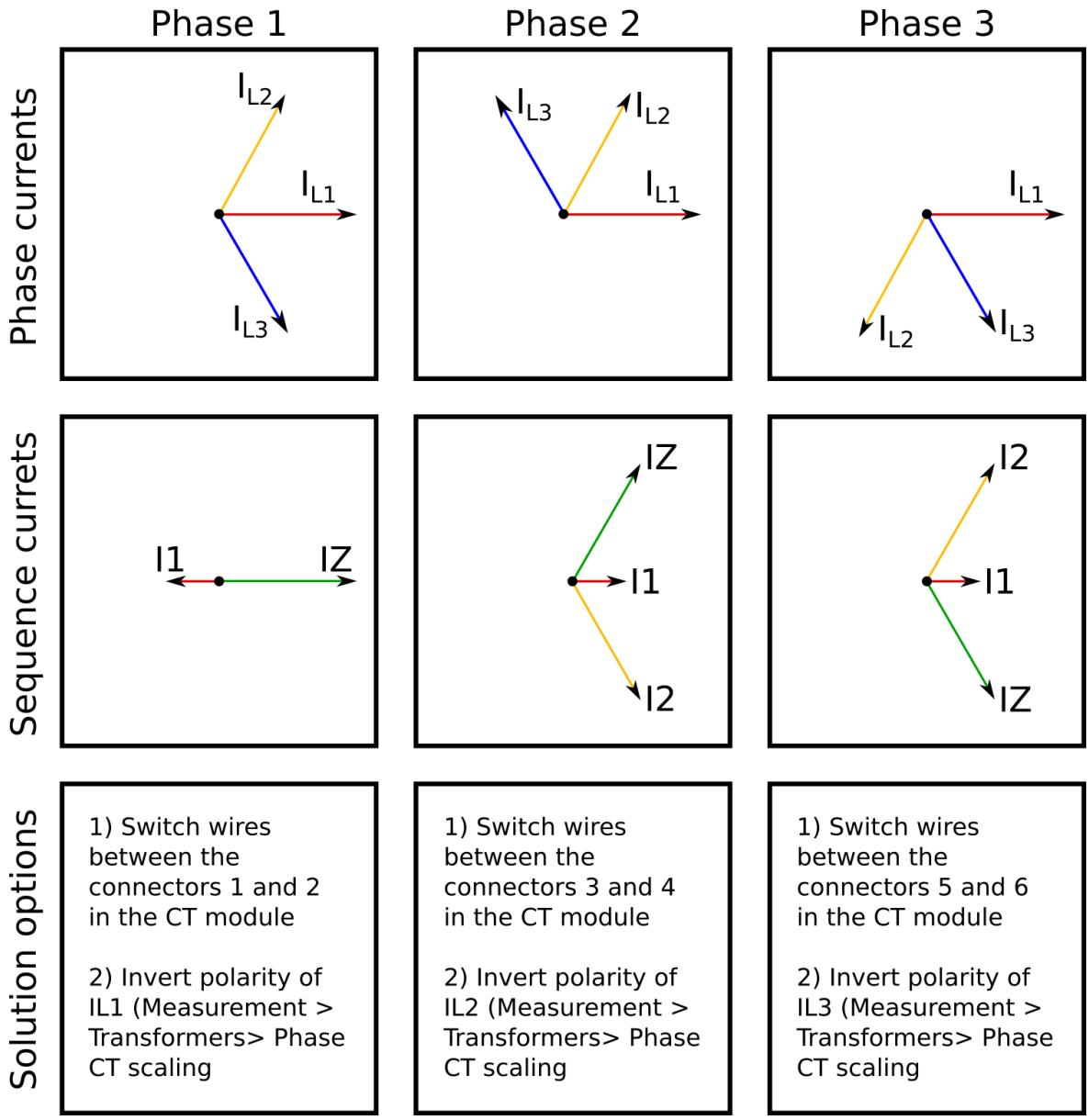

The following image presents the most common problems with network rotation (mix phases). These problems can be difficult to find because the measurement result is always the same in the device. If two phases are mixed together, the network rotation always follows the pattern IL1-IL3-IL2 and the measured negative sequence current is therefore always 1.00 (in. p.u.).

© Arcteq Relays Ltd
IM00014

Figure. 5.2.1 - 67. Common network rotation (mixed phases) problems.

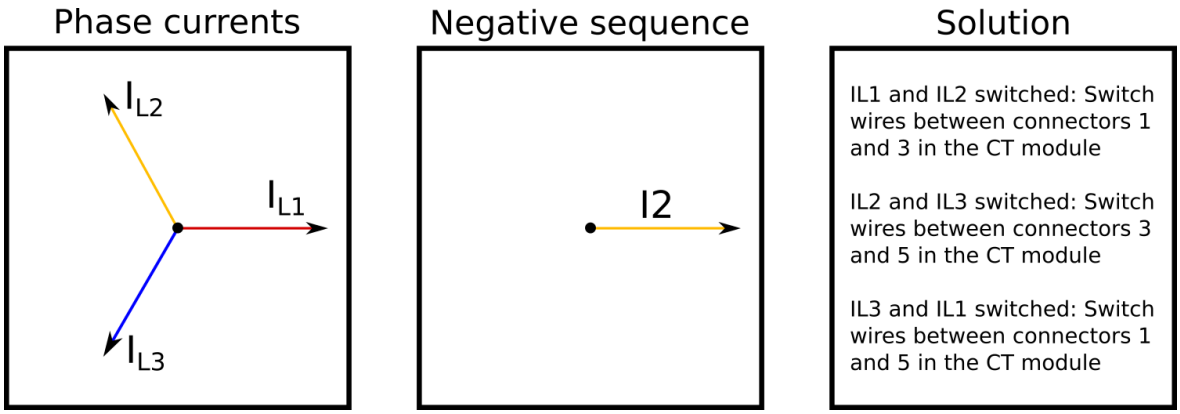

Settings

Table. 5.2.1 - 8. Settings of the Phase CT scaling.

Name	Range	Step	Default	Description
Scale measurement to In	• CT nom p.u. • Object In p.u.	-	• CT nom p.u.	The selection of the reference used in the device's per-unit system scaling. Either the set phase current CT primary or the protected object's nominal current.
Phase CT primary	1.000…25 000.000A	0.001	100.000	The rated primary current of the current transformer.
Phase CT secondary	0.200…10.000A	0.001	5.000	The rated secondary current of the current transformer.
Nominal current In	1.000…25 000.000A	0.001	100.000	The nominal current of the protected object. This setting is only visible if the option "Object In p.u." has been selected in the "Scale measurement to In" setting.
IL1 Polarity	• - • Invert	-	-	The selection of the first current measurement channel's (IL1) polarity (direction). The default setting is for the positive current to flow from connector 1 to connector 2, with the secondary currents' starpoint pointing towards the line.
IL2 Polarity	• - • Invert	-	-	The selection of the second current measurement channel's (IL2) polarity (direction). The default setting is for the positive current to flow from connector 3 to connector 4, with the secondary currents' starpoint pointing towards the line.
IL3 Polarity	• - • Invert	-	-	The selection of the third current measurement channel's (IL3) polarity (direction). The default setting is for the positive current to flow from connector 5 to connector 6, with the secondary currents' starpoint pointing towards the line.
CT scaling factor P/S	-	-	-	A feedback value; the calculated scaling factor that is the ratio between the primary current and the secondary current.

Name	Range	Step	Default	Description
CT scaling factor NOM	-	-	-	A feedback value; the calculated scaling factor that is the ratio between the set primary current and the set nominal current. This parameter is only visible if the option "Object In p.u." has been selected in the "Scale measurement to In" setting.
Ipu scaling primary	-	-	-	A feedback value; the scaling factor for the primary current's per-unit value.
Ipu scaling secondary	-	-	-	A feedback value; the scaling factor for the secondary current's per-unit value.

Table. 5.2.1 - 9. Settings of the Residual I01 CT scaling.

Name	Unit	Range	Step	Default	Description
I01 CT primary	A	0.200 00…25 000.000 00	0.000 01	100.000 00	The rated primary current of the current transformer.
I01 CT secondary	A	0.100 00…10.000 00	0.000 01	1.000 00	The rated secondary current of the current transformer.
I01 Polarity	-	• - • Invert	-	-	The selection of the coarse residual measurement channel's (I01) polarity (direction). The default setting is for the positive current to flow from connector 7 to connector 8.
CT scaling factor P/S	-	-	-	-	A feedback value; the calculated scaling factor that is the ratio between the primary current and the secondary current.

Table. 5.2.1 - 10. Settings of the Residual I02 CT scaling.

Name	Unit	Range	Step	Default	Description
I02 CT primary	A	0.200 00…25 000.000 00	0.000 01	100.000 00	The rated primary current of the current transformer.
I02 CT secondary	A	0.001 00…10.000 00	0.000 01	0.200 00	The rated secondary current of the current transformer.
I02 Polarity	-	• - • Invert	-	-	The selection of the sensitive residual measurement channel's (I02) polarity (direction). The default setting is for the positive current to flow from connector 9 to connector 10.
CT scaling factor P/S	-	-	-	-	A feedback value; the calculated scaling factor that is the ratio between the primary current and the secondary current.

Measurements

The following measurements are available in the measured current channels.

© Arcteq Relays Ltd
IM00014

Table. 5.2.1 - 11. Per-unit phase current measurements.

Name	Unit	Range	Step	Description
Pha.curr.ILx	× In	0.000…1 250.000	0.001	The current fundamental frequency component (in p.u.) from each of the phase current channels.
Pha.curr.ILx TRMS	× In	0.00…1 250.00	0.01	The TRMS current (inc. harmonics up to 31st) measurement (in p.u.) from each of the phase current channels.
P-P curr.ILx	× In	0.00…500.00	0.01	The peak-to-peak current measurement (in p.u.) from each of the phase current channels.

Table. 5.2.1 - 12. Primary phase current measurements.

Name	Unit	Range	Step	Description
Pri.Pha.curr.ILx	A	0.00…1 000 000.00	0.01	The primary current measurement fundamental frequency component from each of the phase current channels.
Pha.curr.ILx TRMS Pri	A	0.00…1 000 000.00	0.01	The primary TRMS current (inc. harmonics up to 31st) measurement from each of the phase current channels.

Table. 5.2.1 - 13. Secondary phase current measurements.

Name	Unit	Range	Step	Description
Sec.Pha.curr.ILx	A	0.00…300.00	0.01	The primary current measurement fundamental frequency component from each of the phase current channels.
Pha.curr.ILx TRMS Sec	A	0.00…300.00	0.01	The primary TRMS current (inc. harmonics up to 31st) measurement from each of the phase current channels.

Table. 5.2.1 - 14. Phase angle measurements.

Name	Unit	Range	Step	Description
Pha.angle ILx	deg	0.00…360.00	0.01	The phase angle measurement from each of the three phase current inputs.

Table. 5.2.1 - 15. Per-unit residual current measurements.

Name	Unit	Range	Step	Description
Res.curr.I0x	× In	0.00…1 250.00	0.01	The current measurement fundamental frequency component (in p.u.) from the residual current channel I01 or I02.
Calculated I0	× In	0.00…1 250.00	0.01	The current measurement fundamental frequency component (in p.u.) from the calculated I0 current channel.
Res.curr.I0x TRMS	× In	0.00…1 250.00	0.01	The TRMS current (inc. harmonics up to 31st) measurement (in p.u.) from the residual current channel I01 or I02.
P-P curr.I0x	× In	0.00…500.00	0.01	The peak-to-peak current measurement (in p.u.) from the residual current channel I01 or I02.

Table. 5.2.1 - 16. Primary residual current measurements.

Name	Unit	Range	Step	Description
Pri.Res.curr.I0x	A	0.00…1 000 000.00	0.01	The primary current measurement fundamental frequency component from the residual current channel I01 or I02.
Pri.calc.I0	A	0.00…1 000 000.00	0.01	The primary current measurement fundamental frequency component from the calculated current channel I0.
Res.curr.I0x TRMS Pri	A	0.00…1 000 000.00	0.01	The TRMS current (inc. harmonics up to 31st) measurement from the primary residual current channel I01 or I02.

Table. 5.2.1 - 17. Secondary residual current measurements.

Name	Unit	Range	Step	Description
Sec.Res.curr.I0x	A	0.00…300.00	0.01	The secondary current measurement fundamental frequency component from the residual current channel I01 or I02.
Sec.calc.I0	A	0.00…300.00	0.01	The secondary current measurement fundamental frequency component from the calculated current channel I0.
Res.curr.I0x TRMS Sec	A	0.00…300.00	0.01	The secondary TRMS current (inc. harmonics up to 31st) measurement from the secondary residual current channel I01 or I02.

Table. 5.2.1 - 18. Residual phase angle measurements.

Name	Unit	Range	Step	Description
Res.curr.angle I0x	deg	0.00…360.00	0.01	The residual current angle measurement from the I01 or I02 current input.
calc.I0 Pha.angle	deg	0.00…360.00	0.01	The calculated residual current angle measurement.

Table. 5.2.1 - 19. Per-unit sequence current measurements.

Name	Unit	Range	Step	Description
Positive sequence current	× In	0.00…1 250.00	0.01	The measurement (in p.u.) from the calculated positive sequence current.
Negative sequence current	× In	0.00…1 250.00	0.01	The measurement (in p.u.) from the calculated negative sequence current.
Zero sequence current	× In	0.00…1 250.00	0.01	The measurement (in p.u.) from the calculated zero sequence current.

© Arcteq Relays Ltd
IM00014

Table. 5.2.1 - 20. Primary sequence current measurements.

Name	Unit	Range	Step	Description
Pri.Positive sequence curr.	A	0.00…1 000 000.00	0.01	The primary measurement from the calculated positive sequence current.
Pri.Negative sequence curr.	A	0.00…1 000 000.00	0.01	The primary measurement from the calculated negative sequence current.
Pri.Zero sequence curr.	A	0.00…1 000 000.00	0.01	The primary measurement from the calculated zero sequence current.

Table. 5.2.1 - 21. Secondary sequence current measurements.

Name	Unit	Range	Step	Description
Sec.Positive sequence curr.	A	0.00…300.00	0.01	The secondary measurement from the calculated positive sequence current.
Sec.Negative sequence curr	A	0.00…300.00	0.01	The secondary measurement from the calculated negative sequence current.
Sec.Zero sequence curr.	A	0.00…300.00	0.01	The secondary measurement from the calculated zero sequence current.

Table. 5.2.1 - 22. Sequence phase angle measurements.

Name	Unit	Range	Step	Description
Positive sequence curr.angle	deg	0.00…360.00	0.01	The calculated positive sequence current angle.
Negative sequence curr.angle	deg	0.00…360.00	0.01	The calculated negative sequence current angle.
Zero sequence curr.angle	deg	0.00…360.00	0.01	The calculated zero sequence current angle.

Table. 5.2.1 - 23. Harmonic current measurements.

Name		Range	Step	Description
Harm Abs.or Perc.	-	• Percent • Absolute	-	Defines whether the harmonics are calculated as percentage or absolute values.
Harmonics display	-	• Per unit • Primary A • Secondary A	-	Defines how the harmonics are displayed: in p.u values, as primary current values, or as secondary current values.
Ixx maximum harmonic	A	0.00...100 000.00	0.01	Displays the maximum harmonics value of the selected current input ILx or I0x.
Ixx fundamental	A	0.00...100 000.00	0.01	Displays the current value of the fundamental frequency component (RMS) from the selected current input ILx or I0x.
Ixx harmonics (2nd...31st harmonic)	A	0.00…100 000.00	0.01	Displays the selected harmonic from the current input ILx or I0x.

Name		Range	Step	Description
Ixx Amplitude THD	%	0.000...100.000	0.001	Amplitude ratio THD voltage. Recognized by IEC.
Ixx Power THD	%	0.000...100.000	0.001	Power ratio THD voltage. Recognized by the IEEE.

Current component measurements

The current component measurements indicate the resistive (wattmetric cos[φ]) and reactive (varmetric sin[φ]) current values. These are calculated with the following formulas:

$$\text{Wattmetric resistive component} = I_X * \cos\varphi$$

$$\text{Varmetric reactive component} = I_X * \sin\varphi$$

Where:

- I_X = the magnitude of a phase current or a residual current
- φ = the angle difference between the phase or residual voltage and the phase or residual current.

The following measurements are available from the measured current channels.

Table. 5.2.1 - 24. Per-unit phase current component measurements.

Name	Unit	Range	Step	Description
ILx Resistive Current p.u.	× In	–1 250.00…1 250.00	0.01	The resistive current component measurement (in p.u.) from each of the phase current channels.
ILx Reactive Current p.u.	× In	–1 250.00…1 250.00	0.01	The reactive current component measurement (in p.u.) from each of the phase current channels.
Pos.Seq Resistive Current p.u.	× In	–1 250.00…1 250.00	0.01	The resistive current component measurement (in p.u.) from the positive sequence current channel.
Pos.Seq Reactive Current p.u.	× In	–1 250.00…1 250.00	0.01	The reactive current component measurement (in p.u.) from the positive sequence current channel.
I0x Residual Resistive Current p.u.	× In	–1 250.00…1 250.00	0.01	The resistive current component measurement (in p.u.) from the residual current channel I0x.
I0x Residual Reactive Current p.u.	× In	–1 250.00…1 250.00	0.01	The reactive current component measurement (in p.u.) from the residual current channel I0x.

Table. 5.2.1 - 25. Primary phase current component measurements.

Name	Unit	Range	Step	Description
ILx Resistive Current Pri.	A	–100 000.00 …100 000.00	0.01	The primary resistive current component measurement from each of the phase current channels.

© Arcteq Relays Ltd
IM00014

Name	Unit	Range	Step	Description
ILx Reactive Current Pri.	A	–100 000.00 …100 000.00	0.01	The primary reactive current component measurement from each of the phase current channels.
Pos.Seq. Resistive Current Pri.	A	–100 000.00 …100 000.00	0.01	The primary resistive current component measurement from the positive sequence current channel.
Pos.Seq. Reactive Current Pri.	A	–100 000.00 …100 000.00	0.01	The primary reactive current component measurement from the positive sequence current channel.
I0x Residual Resistive Current Pri.	A	–100 000.00 …100 000.00	0.01	The primary resistive current component measurement from both of the residual current channels.
I0x Residual Reactive Current Pri.	A	–100 000.00 …100 000.00	0.01	The primary reactive current component measurement from both of the residual current channels.

Table. 5.2.1 - 26. Secondary phase current component measurements.

Name	Unit	Range	Step	Description
ILx Resistive Current Sec.	A	–300.00…300.00	0.01	The secondary resistive current component measurement from each of the phase current channels.
ILx Reactive Current Sec.	A	–300.00…300.00	0.01	The secondary reactive current component measurement from each of the phase current channels.
Pos.Seq Resistive Current Sec.	A	–300.00…300.00	0.01	The secondary resistive current component measurement from the positive sequence current channel.
Pos.Seq Reactive Current Sec.	A	–300.00…300.00	0.01	The secondary reactive current component measurement from the positive sequence current channel.
I0x Resistive Current Sec.	A	–300.00…300.00	0.01	The secondary resistive current component measurement from both of the residual current channels.
I0x Reactive Current Sec.	A	–300.00…300.00	0.01	The secondary reactive current component measurement from both of the residual current channels.

5.2.2 Power and energy calculation

Power is divided into three magnitudes: apparent power (S), active power (P) and reactive power (Q). Energy measurement calculates magnitudes for active and reactive energy. Energy can flow to the forward direction (exported) or to the reverse direction (imported).

If a unit has more than one CT measurement module, the user can choose which module's current measurement is used by the power calculation. The power and energy measurements are updated every 5 milliseconds.

Line-to-neutral voltages available

Power is calculated from line-to-neutral voltages and phase currents. If line-to-line voltages are connected, the device can calculate line-to-neutral voltages based on the measured zero sequence voltage. The following equations apply for power calculations with the line-to-neutral mode and the line-to-line voltage mode (with U0 connected and measured):

Figure. 5.2.2 - 68. Three-phase power (S) calculation.

$$S_{L1} = U_{L1} \times I_{L1}$$
$$S_{L2} = U_{L2} \times I_{L2}$$
$$S_{L3} = U_{L3} \times I_{L3}$$
$$S = S_{L1} + S_{L2} + S_{L3}$$

Figure. 5.2.2 - 69. Three-phase active power (P) calculation.

$$P_{L1} = U_{L1} \times I_{L1} \cos\varphi$$
$$P_{L2} = U_{L2} \times I_{L2} \cos\varphi$$
$$P_{L3} = U_{L3} \times I_{L3} \cos\varphi$$
$$P = P_{L1} + P_{L2} + P_{L3}$$

In these equations, phi (φ) is the angle difference between voltage and current.

Figure. 5.2.2 - 70. Three-phase reactive power (Q) calculation.

$$Q_{L1} = U_{L1} \times I_{L1} \sin\varphi$$
$$Q_{L2} = U_{L2} \times I_{L2} \sin\varphi$$
$$Q_{L3} = U_{L3} \times I_{L3} \sin\varphi$$
$$Q = Q_{L1} + Q_{L2} + Q_{L3}$$

Active power can be to the forward or the reverse direction. The direction of active power can be indicated with the power factor (Cos (φ), or Cosine phi), which is calculated according the following formula:

$$3PH\ Cos(phi) = {}^{P}/_{S}$$
$$L1\ Cos(phi) = {}^{P_{L1}}/_{S_{L1}}$$
$$L2\ Cos(phi) = {}^{P_{L2}}/_{S_{L2}}$$
$$L3\ Cos(phi) = {}^{P_{L3}}/_{S_{L3}}$$

The direction of reactive power is divided into four quadrants. Reactive power may be inductive or capacitive on both forward and reverse directions. Reactive power quadrant can be indicated with Tan (φ) (tangent phi), which is calculated according the following formula:

© Arcteq Relays Ltd

$$3PH\ Tan(phi) = {}^{Q}/_{P}$$

$$L1\ Tan(phi) = {}^{Q_{L1}}/_{P_{L1}}$$

$$L2\ Tan(phi) = {}^{Q_{L2}}/_{P_{L2}}$$

$$L3\ Tan(phi) = {}^{Q_{L3}}/_{P_{L3}}$$

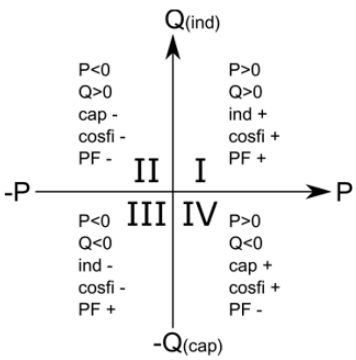

Power factor calculation is done similarly to the Cosine phi calculation but the polarity is defined by the reactive power direction. Therefore, the power factor is calculated with the following formula:

$$3PH\ PF = {}^{P}/_{S} * {}^{Q}/_{|Q|}$$

$$L1\ PF = {}^{P_{L1}}/_{S_{L1}} * {}^{Q_{L1}}/_{|Q_{L1}|}$$

$$L2\ PF = {}^{P_{L2}}/_{S_{L2}} * {}^{Q_{L2}}/_{|Q_{L2}|}$$

$$L3\ PF = {}^{P_{L3}}/_{S_{L3}} * {}^{Q_{L3}}/_{|Q_{L3}|}$$

Only line-to-line voltages available

If the line-to-line voltages are measured but the zero sequence voltage is not measured or is not otherwise known, the three-phase power calculation is based on Aron's theorem:

$$S = U_{23} \times I_{L1} \cos(30) + U_{31} \times I_{L2} \cos(30)$$

$$P = U_{23} \times I_{L1} \cos(30 - \varphi) + U_{31} \times I_{L2} \cos(30 + \varphi)$$

$$Q = U_{23} \times I_{L1} + \sin(30 - \varphi) + U_{31} \times I_{L2} \sin(30 + \varphi)$$

Both cos(φ) and tan(φ) are calculated in the same way as in the line-to-neutral mode.

Troubleshooting

Check the "Troubleshooting" section in chapters "Current measurement and scaling" and "Voltage measurement and scaling" for more information. Most power and energy measurement problems are usually related to the same issues (i.e. wiring errors, wrong measurement modes, faulty frequency settings, etc.).

Settings

Table. 5.2.2 - 27. Power and energy measurement settings

Name	Range	Step	Default	Description
3ph active energy measurement	• Disabled • Enabled	-	Disabled	Enables/disables the active energy measurement.
3ph reactive energy measurement	• Disabled • Enabled	-	Disabled	Enables/disables the reactive and apparent energy measurement.

Name	Range	Step	Default	Description
3ph energy megas or kilos	• Mega • Kilo	-	Mega	Defines whether energy is measured with the prefix 'kilo' (10^3) or 'mega' (10^6).
Edit energy values	• Disabled • Enabled	-	Disabled	When this parameter is enabled it is possible to manually edit exported and imported active energy values. NOTICE! "E 3ph M or k" parameter has to be set to "kilo" for this feature to function.
Invert imp/ exp energy directions	• Not inverted • Inverted	-	Not inverted	Inverts the direction of imported and exported energy without affecting the direction of power calculation.
Nominal power kVA	0.10...500000.00kVA	0.01kVA	100kVA	Defines the nominal power of the protected object.
PQ Quadrant	• Undefined • Q1 Fwd Ind • Q2 Rev Cap • Q3 Rev Ind • Q4 Fwd Cap	-	Undefined	Indicates what the power PQ quadrant is at that moment.
VA Quadrant	• Undefined • Q1 Fwd Cap AV • Q2 Rev Ind AV • Q3 Rev Cap VA • Q4 Fwd Ind VA	-	Undefined	Indicates what the power VA quadrant is at that moment.
Reset energy calculators ("Reset 3ph Energies")	• - • Reset	-	-	Resets the memory of the three-phase energy calculators. Goes automatically back to the "-" state after the reset is finished.
Phase active energy measurement	• Disabled • Enabled	-	Disabled	Enables/disables the active energy per phase measurement.
Phase reactive energy measurement	• Disabled • Enabled	-	Disabled	Enables/disables the reactive energy per phase measurement.
Phase energies megas or kilos	• Mega • Kilo	-	Mega	Defines whether energy (per phase) is measured with the prefix 'kilo' (10^3) or 'mega' (10^6).
Reset energy calculators (per phase) ("Reset E per phase")	• - • Reset	-	-	Resets the memory of the indivisual phase energy calculator. Goes automatically back to the "-" state after the reset is finished.

© Arcteq Relays Ltd

Table. 5.2.2 - 28. Energy Dose Counter 1 settings

Name	Range	Step	Default	Description
Energy dose counter mode	• Disabled • Activated	-	Disabled	Enables/disables energy dose counters generally.
Clear pulse counter	• - • Clear	-	-	Resets the "DC 1…4 Pulses sent" counters back to zero.
DC 1…4 enable	• Disabled • Enabled	-	Disabled	Enables/disables the energy dose counter 1…4 individually.
DC 1…4 Input signal select	• 3PH.Fwd.Act.EP • 3PH.Rev.Avt.EP • 3PH.Fwd.React.EQ.CAP • 3PH.Fwd.React.EQ.IND • 3PH.Rev.React.EQ.CAP • 3PH.Rev.React.EQ.IND	-	3PH.Fwd.Act.EP	Selects whether the energy is active or reactive, whether the direction of the energy is forward of reverse, and whether reactive energy is inductive or capacitive.
DC 1…4 Input signal	$-1 \times 10^6 \ldots 1 \times 10^6$	0.01	-	The total amount of energy consumed.
DC 1…4 Pulse magnitude	0…1800kW/var	0.005kW/var	1kW/Var	The set pulse size. An energy pulse is given every time the set magnitude is exceeded.
DC 1…4 Pulse length	0…1800s	0.005s	1s	The total length of a control pulse.
DC1…4 Pulses sent	0…4 294 967 295	1	-	Indicates the total number of pulses sent.

Table. 5.2.2 - 29. DC 1…4 Pulse out settings

Name	Range	Step	Default	Description
DC 1…4 Pulse out	OUT1…OUTx	-	None selected	The selection of the controlled physical outputs.

Power measurements

The following power calculations are available when the voltage and the current cards are available.

Table. 5.2.2 - 30. Three-phase power calculations.

Name	Range	Step	Description
3PH Apparent power (S)	$-1x10^6 \ldots 1x10^6$kVA	0.001kVA	The total three-phase apparent power in kilo-volt-ampere
3PH Active power (P)	$-1x10^6 \ldots 1x10^6$kW	0.001kW	The total three-phase active power in kilowatts
3PH Reactive power (Q)	$-1x10^6 \ldots 1x10^6$kVar	0.001kVar	The total three-phase reactive power in kilovars

Name	Range	Step	Description
3PH Apparent power (S MVA)	$-1x10^5...1x10^5$MVA	0.001MVA	The total three-phase apparent power in megawatts
3PH Active power (P MW)	$-1x10^5...1x10^5$MW	0.001MW	The total three-phase active power in mewatts
3PH Reactive power (QMVar)	$-1x10^5...1x10^5$MVar	0.001MVar	The total three-phase active power in megavars
3PH Tan(phi)	$-1x10^6...1x10^6$	0.001	The direction of three-phase active power
3PH Cos(phi)	$-1x10^6...1x10^6$	0.001	The direction of three-phase reactive power
3PH Power factor	$-1x10^6...1x10^6$	0.0001	The three-phase power factor

Table. 5.2.2 - 31. Single-phase power calculations (L1...L3).

Name	Unit	Range	Step	Description
Lx Apparent power (S)	kVA	$-1x10^6...1x10^6$	0.001	The apparent power of Phase Lx in kilo-volt-amperes
Lx Active power (P)	kW	$-1x10^6...1x10^6$	0.001	The active power of Phase Lx in kilowatts
Lx Reactive power (Q)	kVar	$-1x10^6...1x10^6$	0.001	The reactive power of Phase Lx kilovars
Lx Tan(phi)	-	$-1x10^6...1x10^6$	0.001	The direction of Phase Lx's active power
Lx Cos(phi)	-	$-1x10^6...1x10^6$	0.001	The direction of Phase Lx's reactive power
Lx Power factor	-	$-1x10^6...1x10^6$	0.0001	The power factor of Phase Lx

Energy measurements

The following energy calculations are available when the voltage and the current cards are available. Please note that the unit prefix is determined by the user's selection between 'kilo' and 'mega' in "Three-phase energy prefix ("E 3ph M or k")" under the general "Power and energy measurement settings".

Table. 5.2.2 - 32. Three-phase energy calculations.

Name	Range	Step	Description
Exported Active Energy (P) (kWh or MWh)	$-1x10^9...1x10^9$	1	The total amount of exported active energy.
Imported Active Energy (P) (kWh or MWh)	$-1x10^9...1x10^9$	1	The total amount of imported active energy.
Active Energy (P) Export/Import balance (kWh or MWh)	$-1x10^9...1x10^9$	1	The sum of imported and exported active energy.
Exported (Q) while Export (P) (kVarh or MVarh)	$-1x10^9...1x10^9$	1	The total amount of exported reactive energy while active power is exported.
Imported (Q) while Export (P). (kVarh or MVarh)	$-1x10^9...1x10^9$	1	Total amount of imported reactive energy while active energy is exported.

© Arcteq Relays Ltd
IM00014

Name	Range	Step	Description
Reactive energy (Q) balance while export (P) (kVarh or MVarh)	$-1x10^9 \ldots 1x10^9$	1	The sum of imported and exported reactive capacitive energy while active power is exported.
Exported (Q) while Import (P) (kVarh or MVarh)	$-1x10^9 \ldots 1x10^9$	1	The total amount of exported reactive energy while active energy is imported.
Imported (Q) while Import (P) (kVarh or MVarh)	$-1x10^9 \ldots 1x10^9$	1	The total amount of imported reactive energy while active energy is imported.
Reactive energy (Q) balance while Import (P) (kVarh or MVarh)	$-1x10^9 \ldots 1x10^9$	1	The sum of imported and exported reactive energy while active energy is imported.
Apparent Energy (S) while Export (P) (kVAh or MVAh)	$-1x10^9 \ldots 1x10^9$	1	The total amount of exported apparent energy while active energy is exported.
Apparent Energy (S) while Import (P) (kVAh or MVAh)	$-1x10^9 \ldots 1x10^9$	1	The total amount of exported apparent energy while active energy is imported.
Apparent Energy (S) Net	$-1x10^9 \ldots 1x10^9$	1	Total amount of apparent energy.
Real Energy (P) Net	$-1x10^9 \ldots 1x10^9$	1	The sum of active energy supply and demand.
Reactive Energy (Q) Net	$-1x10^9 \ldots 1x10^9$	1	The sum of reactive energy supply and demand.
Real Energy (P) Supply	$-1x10^9 \ldots 1x10^9$	1	Total amount of active energy supplied. Default supply direction towards busbar.
Reactive Energy (Q) Supply	$-1x10^9 \ldots 1x10^9$	1	Total reactive energy supplied. Default supply direction towards busbar.
Real Energy (P) Demand	$-1x10^9 \ldots 1x10^9$	1	Total amount of active energy demand. Default demand direction from busbar.
Reactive Energy (Q) Demand	$-1x10^9 \ldots 1x10^9$	1	Total amount of reactive energy demand. Default demand direction from busbar.

Table. 5.2.2 - 33. Single-phase energy calculations (L1...L3).

Name	Range	Step	Description
Export Active Energy Lx (kWh or MWh)	$-1x10^9 \ldots 1x10^9$	1	The exported active energy of the phase.
Import Active Energy (kWh or MWh)	$-1x10^9 \ldots 1x10^9$	1	The imported active energy of the phase.
Active Energy (P) Export/Import balance (kWh or MWh)	$-1x10^9 \ldots 1x10^9$	1	The sum of the phase's imported and exported active energy.
Exported (Q) while Export (P) Lx (kVarh or MVarh)	$-1x10^9 \ldots 1x10^9$	1	The exported reactive energy of the phase while active energy is exported.
Imported (Q) while Export (P) Lx (kVarh or MVarh)	$-1x10^9 \ldots 1x10^9$	1	The imported reactive energy of the phase while active energy is exported.
Reactive Energy (Q) balance while Export (P) Lx (kVarh or MVarh)	$-1x10^9 \ldots 1x10^9$	1	The sum of the phase's imported and exported reactive energy while active energy is exported.

Name	Range	Step	Description
Exported (Q) while Import (P) Lx (kVarh or MVarh)	$-1x10^9 \ldots 1x10^9$	1	The exported reactive energy of the phase while active energy is imported.
Imported (Q) while Import (P) Lx (kVarh or MVarh)	$-1x10^9 \ldots 1x10^9$	1	The imported reactive energy of the phase while active energy is imported.
Reactive energy (Q) balance while Import (P) Lx (kVarh or MVarh)	$-1x10^9 \ldots 1x10^9$	1	The sum of the phase's imported and exported reactive energy while active energy is imported.
Apparent Energy (S) while Export (P) Lx	$-1x10^9 \ldots 1x10^9$	1	The apparent energy of the phase while active energy is exported.
Apparent Energy (S) while Import (P) Lx	$-1x10^9 \ldots 1x10^9$	1	The apparent energy of the phase while active energy is imported.

Calculation examples

Here is an example of power calculation. Both wiring methods (line-to-line and line-to-neutral) are checked with the same signal injection. The voltage scaling is set to 20 000 : 100 V and the current scaling is set to 1000 : 5 A.

Voltages (line-to-neutral):	Currents:
U_{L1} = 40.825 V, 45.00°	I_{L1} = 2.5 A, 0.00°
U_{L2} = 61.481 V, -159.90°	I_{L2} = 2.5 A, -120.00°
U_{L3} = 97.742 V, 126.21°	I_{L3} = 2.5 A, 120.00°

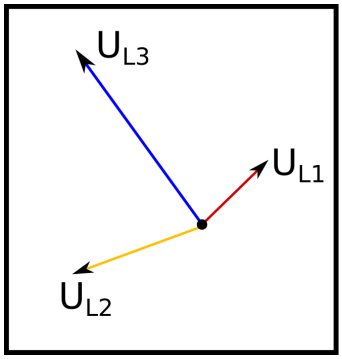

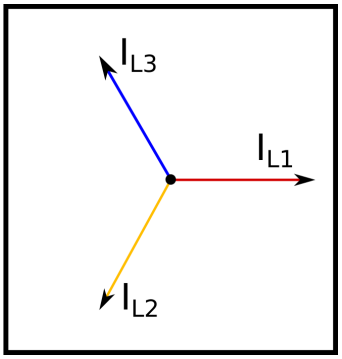

$$S_{L1} = U_{L1} \times I_{L1} = 40.825\ \text{V} \times 2.5\ \text{A} = 102\ \text{VA (secondary)}\ 4.08\ \text{MVA (primary)}$$

$$P_{L1} = U_{L1} \times I_{L1} \cos\varphi = 40.825\ \text{V} \times 2.5\ \text{A} \cos(45° - 0°) = 72.2\ \text{W (secondary)}\ 2.89\ \text{MW (primary)}$$

$$Q_{L1} = U_{L1} \times I_{L1} \sin\varphi = 40.825\ \text{V} \times 2.5\ \text{A} \sin(45° - 0°) = 72.2\ \text{var (secondary)}\ 2.89\ \text{MVar (primary)}$$

$$L1\ Tan(phi) = {}^{Q_{L1}}/_{P_{L1}} = {}^{2.89}/_{2.89} = 1.00 \qquad L1\ Cos(phi) = {}^{P_{L1}}/_{S_{L1}} = {}^{2.89}/_{4.08} = 0.71$$

Name	Value	Name	Value	Name	Value	Name	Value
L1 (S)	4.08 MVA	L2 (S)	6.15 MVA	L3 (S)	9.77 MVA	3PH (S)	20.00 MVA
L1 (P)	2.89 MW	L2 (P)	4.72 MW	L3 (P)	9.71 MW	3PH (P)	17.32 MW

© Arcteq Relays Ltd
IM00014

Name	Value	Name	Value	Name	Value	Name	Value
L1 (Q)	2.89 Mvar	L2 (Q)	-3.94 Mvar	L3 (Q)	1.06 Mvar	3PH (Q)	0.01 Mvar
L1 Tan	1.00	L2 Tan	-0.83	L3 Tan	0.11	3PH Tan	0.00
L1 Cos	0.71	L2 Cos	0.77	L3 Cos	0.99	3PH Cos	0.87

Voltages (line-to-line):	Currents:
U_{L12} = 100.00 V, 30.00°	I_{L1} = 2.5 A, 0.00°
U_{L23} = 100.00 V, -90.00°	I_{L2} = 2.5 A, -120.00°
	I_{L3}= 2.5 A, 120.00°

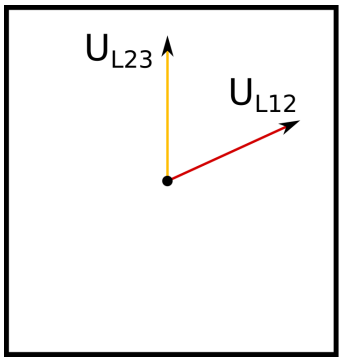

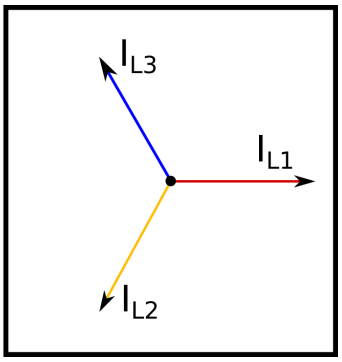

$$S = U_{12} \times I_{L1} + U_{23} \times I_{L2}$$

$$S = 100\ \text{V} \times 2.5\ \text{A} + 100\ \text{V} \times 2.5\ \text{A} = 500\ \text{VA (sec)}\ 20.00\ \text{MVA (pri)}$$

$$P = U_{12} \times I_{L1} \cos(-\varphi) + U_{23} \times I_{L2} \cos(\varphi)$$

$$P = 100\ \text{V} \times 2.5\ \text{A} \cos -(30° - 0°) + 100\ \text{V} \times 2.5\ \text{A} \cos(270° - 240°) = 433\ \text{W}\ (sec)\ 17.32\ \text{MW}\ (pri)$$

$$Q = U_{12} \times I_{L1} + \sin(-\varphi) + U_{23} \times I_{L2} \sin(\varphi)$$

$$Q = 100\ \text{V} \times 2.5\ \text{A} \sin -(30° - 0°) + 100\ \text{V} \times 2.5\ \text{A} \sin(270° - 240°) = 0\ \text{var (sec)}\ 0\ \text{Mvar}\ (pri)$$

$$3PH\ Tan(phi) = {}^{Q}/_{P} = {}^{0.01}/_{17.32} = 0.00 \qquad 3PH\ Cos(phi) = {}^{P}/_{S} = {}^{17.32}/_{20.00} = 0.87$$

Name	Values
3PH (S)	20.00 MVA
3PH (P)	17.32 MW
3PH (Q)	0.00 Mvar
3PH Tan	0.00
3PH Cos	0.87

5.2.3 Frequency tracking and scaling

Measurement sampling can be set to the frequency tracking mode or to the fixed user-defined frequency sampling mode. The benefit of frequency tracking is that the measurements are within a pre-defined accuracy range even when the fundamental frequency of the power system changes.

Table. 5.2.3 - 34. Frequency tracking effect (FF changes from 6 Hz to 75 Hz).

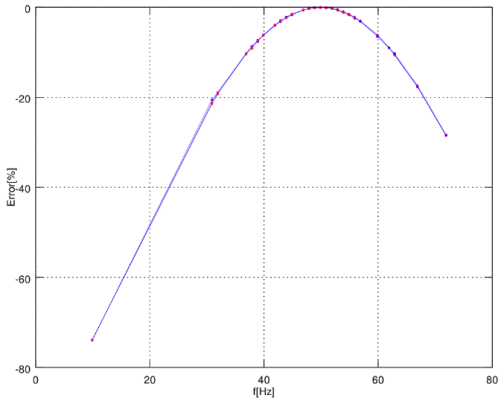	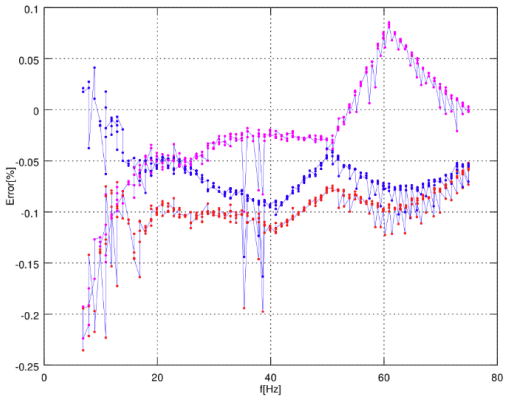
The measurement error with a fixed 50 Hz sampling frequency when the frequency changes. The constant current is 5 A, the frequency sweep is from 6 Hz to 75 Hz.	The measurement error with frequency tracking when the frequency changes. The constant current is 5 A, the frequency sweep is from 6 Hz to 75 Hz.

As the figures above show, the sampling frequency has a major effect on the device's measurement accuracy. If the sampling is not tracked to the system frequency, for example a 10 Hz difference between the measured and the set system frequency can give a measurement error of over 5 %. The figures also show that when the frequency is tracked and the sampling is adjusted according to the detected system frequency, the measurement accuracy has an approximate error of 0.1...- 0.2 % error in the whole frequency range.

AQ -200 series devices have a measurement accuracy that is independent of the system frequency. This has been achieved by adjusting the sample rate of the measurement channels according to the measured system frequency; this way the FFT calculation always has a whole power cycle in the buffer. The measurement accuracy is further improved by Arcteq's patented calibration algorithms that calibrate the analog channels against eight (8) system frequency points for both magnitude and angle. This frequency-dependent correction compensates the frequency dependencies in the used, non-linear measurement hardware and improves the measurement accuracy significantly. Combined, these two methods give an accurate measurement result that is independent of the system frequency.

Troubleshooting

When the measured current, voltage or frequency values differ from the expected values, the following table offers possible solutions for the problems.

Problem	Check / Resolution
The measured current or voltage amplitude is lower than it should be./ The values are "jumping" and are not stable.	The set system frequency may be wrong. Please check that the frequency settings match the local system frequency, or change the measurement mode to "Tracking" (*Measurement* → *Frequency* → "Sampling mode") so the device adjusts the frequency itself.

© Arcteq Relays Ltd
IM00014

Problem	Check / Resolution
The frequency readings are wrong.	In Tracking mode the device may interpret the frequency incorrectly if no current is injected into the CT (or voltage into the VT). Please check the frequency measurement settings (*Measurement → Frequency*).

Settings

Table. 5.2.3 - 35. Settings of the frequency tracking.

Name	Range	Step	Default	Description
Sampling mode	• Fixed • Tracking	-	Fixed	Defines which measurement sampling mode is in use: the fixed user-defined frequency, or the tracked system frequency.
Max. tracking frequency allowed (+Nom freq.)	0.001…75.000 Hz	0.001 Hz	0.001 Hz	Defines the upper limit for the deviation from the system nominal frequency to be tracked. If the frequency increases more than allowed from the nominal value, the tracking is discarded and the value of the nominal frequency will be used.
System nominal frequency	7.000…75.000Hz	0.001Hz	50Hz	The user-defined system nominal frequency that is used when the "Sampling mode" setting has been set to "Fixed".
Min. tracking frequency allowed (–Nom freq.)	0.001…75.000 Hz	0.001 Hz	0.001 Hz	Defines the lower limit for the deviation from the system nomnal frequency to be tracked. If the frequency decreases more than allowed from the nominal value, the tracking is discarded and the value of the nominal frequency will be used.
Tracked system frequency	0.000…75.000Hz	0.001Hz	-	Displays the rough measured system frequency.
Sampling frequency in use	0.000…75.000Hz	0.001Hz	-	Displays the tracking frequency that is in use at that moment.
Frequency reference 1	• None • CT1IL1 • CT2IL1 • VT1U1 • VT2U1	-	CT1IL1	The first reference source for frequency tracking.
Frequency reference 2	• None • CT1IL2 • CT2IL2 • VT1U2 • VT2U2	-	CT1IL2	The second reference source for frequency tracking.
Frequency reference 3	• None • CT1IL3 • CT2IL3 • VT1U3 • VT2U3	-	CT1IL3	The third reference source for frequency tracking.

Name	Range	Step	Default	Description
Frequency tracking quality	• No trackable channels • Reference 1 trackable • Reference 2 trackable • References 1 & 2 trackable • Reference 3 trackable • Reference 1 & 3 trackable • References 2 & 3 trackable • All references trackable	-	-	Defines the frequency tracker quality. If the measured current (or voltage) amplitude is below the threshold, the channel tracking quality is 0 and cannot be used for frequency tracking. If all channels' magnitudes are below the threshold, there are no trackable channels.
Frequency measurement in use	• No track ch • Ref1 • Ref2 • Ref3	-	-	Indicates which reference is used at the moment for frequency tracking.
Start behavior	• Start tracking immediately • First nominal or tracked	-	Start tracking immediately	Defines the how the tracking starts. Tracking can start immediately, or there can be a set delay time between the receiving of the first trackable channel and the start of the tracking.
Start sampling with	• Use track frequency • Use nom frequency	-	Use track frequency	Defines the start of the sampling. Sampling can begin with a previously tracked frequency, or with a user-set nominal frequency.
Use nominal frequency until	0…1800.000s	0.005s	0.100s	Defines how long the nominal frequency is used after the tracking has started. This setting is only valid when the "Sampling mode" setting is set to "Tracking" and when the "Start behavior" is set to "First nominal or tracked".
Tracked f channel A	0.000…75.000Hz	0.001Hz	-	Displays the rough value of the tracked frequency in Channel A.
Tracked f channel B	0.000…75.000Hz	0.001Hz	-	Displays the rough value of the tracked frequency in Channel B.
Tracked f channel C	0.000…75.000Hz	0.001Hz	-	Displays the rough value of the tracked frequency in Channel C.
System measured frequency	• One f measured • Two f measured • Three f measured	-	-	Displays the amount of frequencies that are measured.
f.atm. Protections	0.000…75.000Hz	0.001Hz	-	Frequency measurement value used by protection functions. When frequency is not measurable this value returns to value set to "System nominal frequency" parameter.

© Arcteq Relays Ltd

Name	Range	Step	Default	Description
f.atm. Display	0.000…75.000Hz	0.001Hz	-	Frequency measurement value used in display. When frequency is not measurable this value is "0 Hz".
f measurement from	• Not measurable • Avg Ref 1 • Avg Ref 2 • Avg Ref 3 • Track Ref 1 • Track Ref 2 • Track Ref 3 • Fast Ref 1 • Fast Ref 2 • Fast Ref 3	-	-	Displays which reference is used for frequency measurement.
SS1.meas.frqs	0.000…75.000Hz	0.001Hz	-	Displays frequency used by "system set" channel 1 and 2.
SS2.meas.frqs				
SS1f meas.from	• Not measurable • Fast Ref U3 • Fast Ref U4	-	-	Displays which voltage channel frequency reference is used by "system set" voltage channel.
SS2f meas.from	• Not measurable • Fast Ref U4	-	-	Displays if U4 channel frequency reference is measurable or not when the channel has been set to "system set" mode.

5.3 General menu

The *General* menu consists of basic settings and indications of the device. Additionally, the all activated functions and their status are displayed in the *Protection*, *Control* and *Monitor* profiles.

Table. 5.3 - 36. The *General* menu read-only parameters

Name	Description
Serial number	The unique serial number identification of the unit.
Firmware version	The firmware software version of the unit.
Hardware configuration	The order code identification of the unit.
System phase rotating order at the moment	The selected system phase rotating order. Can be changed with parameter "System phase rotating order".
UTC time	The UTC time value which the device's clock uses.

Table. 5.3 - 37. Parameters and indications in the *General* menu.

Name	Range	Default	Description
Device name	-	Unitname	The file name uses these fields when loading the .aqs configuration file from the AQ-200 unit.

Name	Range	Default	Description
Device location	-	Unitlocation	
Time synchronization source	• Internal • External NTP • External Serial • IRIG-B	Internal	If an external clock time synchronization source is available, the type is defined with this parameter. In the internal mode there is no external Timesync source. IRIG-B requires a serial fiber communication option card.
Enable stage forcing	• Disabled • Enabled	Disabled	When this parameter is enabled it is possible for the user to force the protection, control and monitoring functions to different statuses like START and TRIP. This is done in the function's *Info* page with the *Force status to* parameter.
System phase rotating order	• A-B-C • A-C-B	A-B-C	Allows the user to switch the expected order in which the phase measurements are wired to the unit.
Language	• User defined • English • Finnish • Chinese • Spanish • French • German • Russian • Ukrainian • Kazakh	English	Changes the language of the parameter descriptions in the HMI. If the language has been set to "Other" in the settings of the AQtivate setting tool, AQtivate follows the value set into this parameter.
AQtivate ethernet port	• All • COM A • Double Ethernet card	All	If the device has a double Ethernet option card it is possible to choose which ports are available for connecting with AQtivate software.
Clear events	• - • Clear	-	Clears the event history recorded in the AQ-200 device.
LCD Contrast	0…255	120	Changes the contrast of the LCD display.
Return to default view	0…3600s	0s	If the user navigates to a menu and gives no input after a period of time defined with this parameter, the unit automatically returns to the default view. If set to 0 s, this feature is not in use.
LED test	• - • Activated	-	When activated, all LEDs are lit up. LEDs with multiple possible colors blink each color.
Reset latches	• - • Reset	-	Resets the latched signals in the logic and the matrix. When a reset command is given, the parameter automatically returns back to "-".
Measurement recorder	• Disabled • Enabled	Disabled	Enables the measurement recorder tool, further configured in *Tools → Misc → Measurement recorder.*

© Arcteq Relays Ltd
IM00014

Name	Range	Default	Description
I/0 default object selection	• OBJ1 • OBJ2 • OBJ3 • OBJ4 • OBJ5 • OBJ6 • OBJ7 • OBJ8 • OBJ9 • OBJ10	OBJ1	"I" and "0" push buttons on the front panel of the device have an indication LED. This parameter defines which objects' status push buttons follow when lighting up the LEDs.
Reconfigure mimic	• - • Reconfigure	-	Reloads the mimic to the unit.

Table. 5.3 - 38. General menu logical inputs.

Name	Description
Reset last fault registers	Signal set to this point can be used for resetting latest recorded fault register.

5.4 Protection functions

5.4.1 General properties of a protection function

The following flowchart describes the basic structure of any protection function. The basic structure is composed of analog measurement values being compared to the pick-up values and operating time delay characteristics.

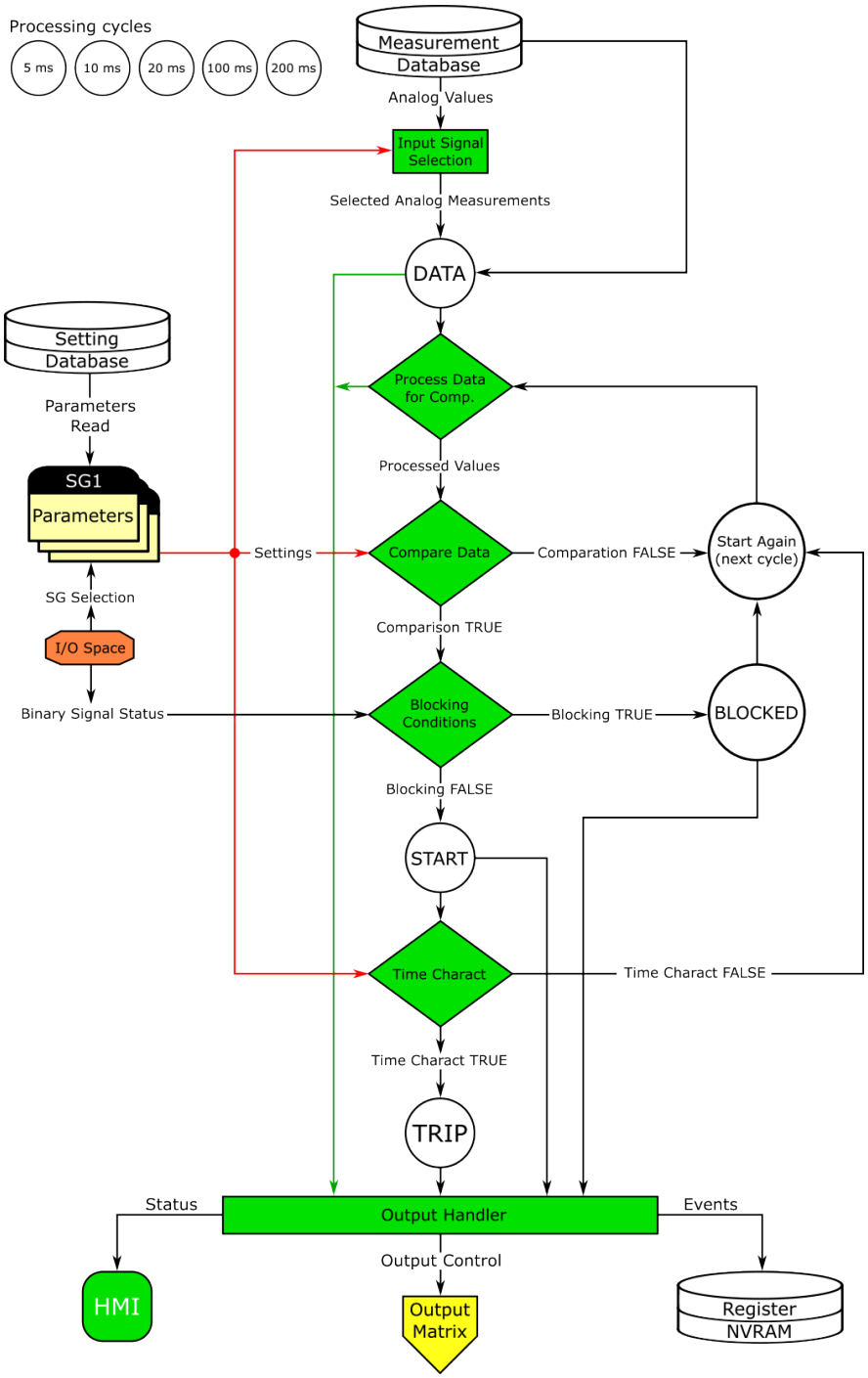

The protection function is run in a completely digital environment with a protection CPU microprocessor which also processes the analog signals transformed into the digital form.

In the following chapters the common functionalities of protection functions are described. If a protection function deviates from this basic structure, the difference is described in the corresponding chapter of the manual.

© Arcteq Relays Ltd
IM00014

Pick-up

The X_{set} parameter defines the pick-up level of the function, and this in turn defines the maximum or minimum allowed measured magnitude (in per unit, absolute or percentage value) before the function takes action. The function constantly calculates the ratio between the pick-up parameter set by the user and the measured magnitude (X_m). The reset ratio of 97 % is built into the function and is always relative to the X_{set} value. If a function's pick-up characteristics vary from this description, they are defined in the function section in the manual.

Figure. 5.4.1 - 71. Pick up and reset.

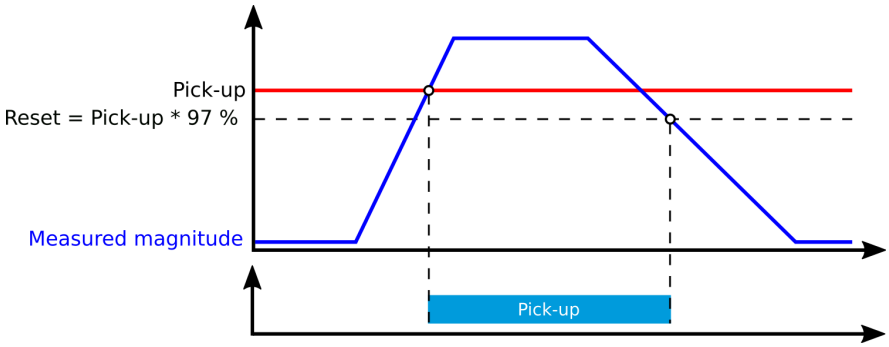

Figure. 5.4.1 - 72. Measurement range in relation to the nominal current.

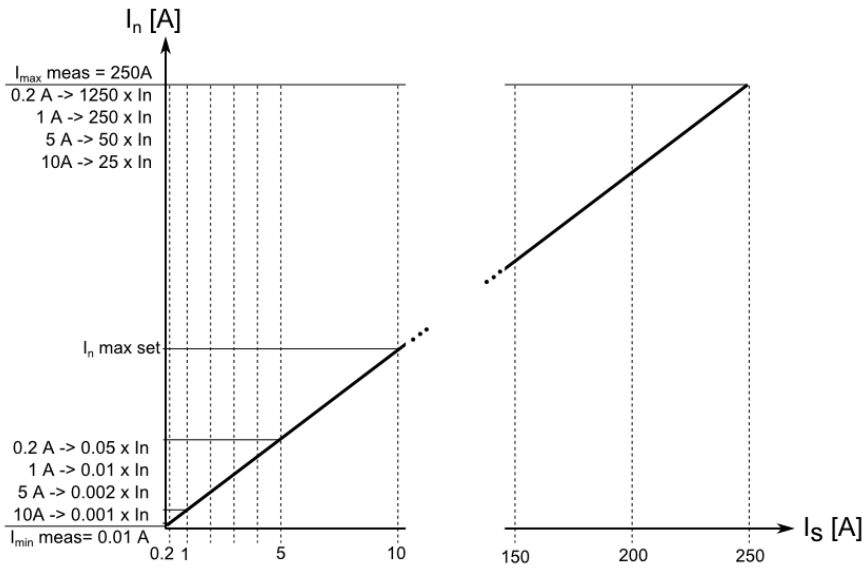

The I_n magnitude refers to the user set nominal current which can range from 0.2…10 A, typically 0.2 A, 1A or 5 A. With its own current measurement card, the device will measure secondary currents from 0.001 A up to 250 A. To this relation the pick-up setting in secondary amperes will vary.

Function blocking

The blocking signal is evaluated at the start of each program cycle. The blocking signals are connected to the function's dedicated input, which can be configured in the *IO → Blocking Input Control* tab of the function.

- When the pick-up element activates and the blocking signal is not active, a START signal is generated, and the function starts or continues with the trip time countdown.
- When the pick-up element activates and the blocking signal is active, a BLOCKED signal is generated, and the function does not process the event further.

- When a START signal is already active and the blocking input signal becomes active, the START signal is reset and BLOCKED signal is generated. The release time characteristics are then processed in the same way as when the pick-up signal is reset.

The blocking signal needs to reach the device minimum of 5 ms before the set operating delay has passed in order for the blocking to activate in time. Blocking of the function causes a time stamped blocking event with information of the startup current values and its fault type to be issued.

Some functions also offer an optional internal inrush harmonic blocking feature. If the inrush harmonic pick-up is active at the same time as the protection function pick-up element, the trip delay timer continues counting down as normal. Once the countdown reaches zero, if the pick-up element remains active and the second harmonic value has dropped, the function issues a trip.

Table. 5.4.1 - 39. Internal inrush harmonic blocking settings.

Name	Range	Step	Default	Description
Inrush harmonic blocking (internal-only trip)	• No • Yes	-	• No	Enables and disables the 2nd harmonic blocking.
2nd harmonic blocking limit (Iharm/Ifund)	0.10…50.00%I_{fund}	0.01%I_{fund}	0.01%I_{fund}	Defines the limit of the 2nd harmonic blocking.

Operating time characteristics

Three basic modes are available for delaying function operation:

- Instant operation: activates the trip signal simultaneously with the start signal with no additional time delay.
- Definite time operation (DT): activates the trip signal after a user-defined time delay regardless of themagnitude of the measured value(s) as long as the pick-up element is active.
- Inverse definite minimum time (IDMT): activates the trip signal after a time which is in relation to the set pick-up value and the measured value.

Both IEC and IEEE/ANSI standard characteristics as well as user settable parameters are available for the IDMT operation. Please note that in the IDMT mode *Definite (minimum)operating time delay* also determines the minimum time for protection tripping (see the figure below). If this function is not desired the parameter should be set to 0 seconds.

© Arcteq Relays Ltd
IM00014

Figure. 5.4.1 - 73. Operating time delay: *Definite (minimum) operating time delay* and the minimum for tripping.

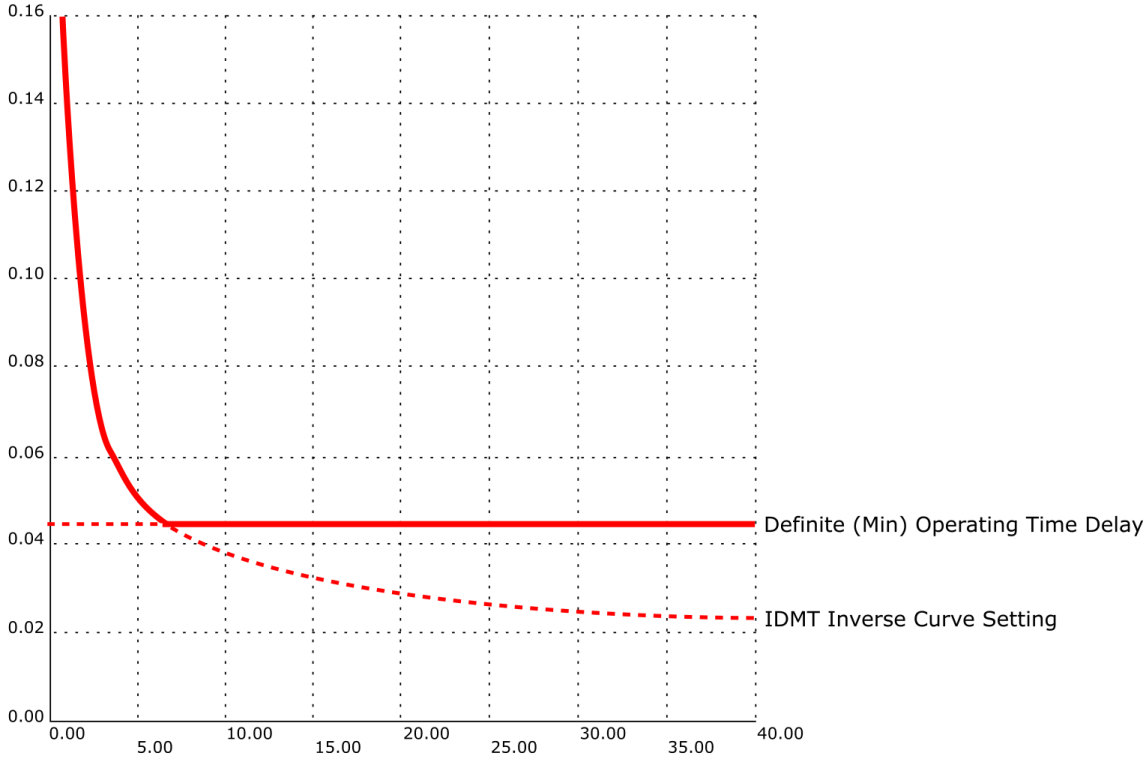

Table. 5.4.1 - 40. Operating time characteristics setting parameters (general).

Name	Range	Step	Default	Description
Delay type	• DT • IDMT	-	DT	Selects the delay type for the time counter. The selection is made between "Inverse definite minimum time" (IDMT) and "Definite time operation" (DT) characteristics.
Definite (minimum) operating time delay	0.000…1800.000s	0.005s	0.040s	When the "Delay type" parameter is set to "DT", this parameter acts as the expected operating time for the protection function. When set to 0 s, the stage operates instantaneously without any additional delay. When the parameter is set to 0.005...1800 s, the stage operates as independent delayed. When the "Delay type" parameter has been set to "IDMT", this parameter can be used to determine the minimum operating time for the protection function. Example of this is presented in the figure above.
Delay curve series	• IEC • IEEE	-	IEC	Selects whether the delay curve series for an IDMT operation follows either IEC or IEEE/ANSI standard defined characteristics. This setting is active and visible when the "Delay type" parameter is set to "IDMT".

Name	Range	Step	Default	Description
Delay characteristics IEC	• NI • EI • VI • LTI • Param	-	NI	Selects the IEC standard delay characteristics. The options include the following: Normally Inverse ("NI"), Extremely Inverse ("EI"), Very Inverse ("VI") and Long Time Inverse ("LTI") characteristics. Additionally, the "Param" option allows the tuning of the constants A and B which then allows the setting of characteristics following the same formula as the IEC curves mentioned here. This setting is active and visible when the "Delay type" parameter is set to "IDMT" and the "Delay curve series" parameter is set to "IEC".
Delay characteristics IEEE	• ANSI NI • ANSI VI • ANSI EI • ANSI LTI • IEEE MI • IEEE VI • IEEE EI • Param	-	ANSI NI	Selects the IEEE and ANSI standard delay characteristics. The options for ANSI include the following: Normal Inverse ("ANSI NI"), Very Inverse ("ANSI VI"), Extremely inverse ("ANSI EI"), Long time inverse ("ANSI LTI") characteristics. IEEE: Moderately Inverse ("IEEE MI"), Very Inverse ("IEEE VI"), Extremely Inverse ("IEEE EI") characteristics. Additionally, the "Param" option allows the tuning of the constants A, B and C which then allows the setting of characteristics following the same formula as the IEEE curves mentioned here. This setting is active and visible when the "Delay type" parameter is set to "IDMT" and the "Delay curve series" parameter is set to "IEEE".
Time dial setting k	0.01…25.00s	0.01s	0.05s	Defines the time dial/multiplier setting for IDMT characteristics. This setting is active and visible when the "Delay type" parameter is set to "IDMT".
A	0.0000…250.0000	0.0001	0.0860	Defines the Constant A for IEC/IEEE characteristics. This setting is active and visible when the "Delay type" parameter is set to "IDMT" and the "Delay characteristic" parameter is set to "Param".
B	0.0000…250.0000	0.0001	0.1850	Defines the Constant B for IEC/IEEE characteristics. This setting is active and visible when the "Delay type" parameter is set to "IDMT" and the "Delay characteristic" parameter is set to "Param".
C	0.0000…250.0000	0.0001	0.0200	Defines the Constant C for IEEE characteristics. This setting is active and visible when the "Delay type" parameter is set to "IDMT" and the "Delay characteristic" parameter is set to "Param".

© Arcteq Relays Ltd
IM00014

Figure. 5.4.1 - 74. Inverse definite minimum time formulas for IEC and IEEE standards.

<table>
<tr><th>IEC</th><th>IEEE/ANSI</th></tr>
<tr><td>$$t = \frac{kA}{\left(\frac{I_m}{I_{set}}\right)^B - 1}$$</td><td>$$t = k\left(\frac{A}{\left(\frac{I_m}{I_{set}}\right)^C - 1} + B\right)$$</td></tr>
<tr><td>t = Operating delay (s)
k = Time dial setting
I_m = Measured maximum current
I_{set} = Pick-up setting
A = Operating characteristics constant
B = Operating characteristics constant</td><td>t = Operating delay (s)
k = Time dial setting
I_m = Measured maximum current
I_{set} = Pick-up setting
A = Operating characteristics constant
B = Operating characteristics constant
C = Operating characteristics constant</td></tr>
<tr><td>Standard delays IEC constants
<table>
<tr><th>Type</th><th>A</th><th>B</th></tr>
<tr><td>Normally Inverse (NI)</td><td>0,14</td><td>0,02</td></tr>
<tr><td>Extremely Inverse (EI)</td><td>80</td><td>2</td></tr>
<tr><td>Very Inverse (VI)</td><td>13,5</td><td>1</td></tr>
<tr><td>Long Time Inverse (LTI)</td><td>120</td><td>1</td></tr>
</table></td><td>Standard delays ANSI constants
<table>
<tr><th>Type</th><th>A</th><th>B</th><th>C</th></tr>
<tr><td>Normally Inverse (NI)</td><td>8,934</td><td>0,1797</td><td>2,094</td></tr>
<tr><td>Very Inverse (VI)</td><td>3,922</td><td>0,0982</td><td>2</td></tr>
<tr><td>Extremely Inverse (EI)</td><td>5,64</td><td>0,02434</td><td>2</td></tr>
<tr><td>Long Time Inverse (LTI)</td><td>5,614</td><td>2,186</td><td>1</td></tr>
</table>
Standard delays IEEE constants
<table>
<tr><th>Type</th><th>A</th><th>B</th><th>C</th></tr>
<tr><td>Moderately Inverse (MI)</td><td>0,0515</td><td>0,114</td><td>0,02</td></tr>
<tr><td>Very Inverse (VI)</td><td>19,61</td><td>0,491</td><td>2</td></tr>
<tr><td>Extremely Inverse (EI)</td><td>28,2</td><td>0,1217</td><td>2</td></tr>
</table></td></tr>
</table>

Non-standard delay characteristics

In addition to the previously mentioned delay characteristics, some functions also have delay characteristics that deviate from the IEC or IEEE standards. These functions are the following:

- non-directional overcurrent stages
- non-directional earth fault stages
- directional overcurrent stages
- directional earth fault stages.

The setting parameters and their ranges are documented in the chapters of the respective function blocks.

Table. 5.4.1 - 41. Inverse definite minimum time formulas for nonstandard characteristics.

RI-type	RD-type
Used for getting the time grading with mechanical relays.	Mostly used in earth fault protection which grants selective tripping even in non-directional protection.
$$t = \frac{k}{0.339 - 0.236 * \frac{I_{set}}{I_m}}$$	$$t = 5.8 - 1.35 * \ln\left(\frac{I_m}{k * I_{set}}\right)$$
t = Operation delay (s) k = Time dial setting I_m = Measured maximum current I_{set} = Pick-up setting	t = Operation delay (s) k = Time dial setting I_m = Measured maximum current I_{set} = Pick-up setting

NOTICE!
When using RD-type and "k" has been set lower than 0.3 calculated operation time can be lower than 0 seconds with some measurement values. In these cases operation time will be instant.

When using the release delay option where the operating time counter is calculating the operating time during the release time, the function will not trip if the input signal is not activated again during the release time counting.

The behavior of the stages with different release time configurations are presented in the figures below.

Table. 5.4.1 - 42. Setting parameters for reset time characteristics.

Name	Range	Step	Default	Description
Delayed pick-up release	• No • Yes	-	Yes	Resetting characteristics selection (either time-delayed or instant) after the pick-up element is released. If set to "Yes", the START signal is reset after a set release time delay.
Release time delay	0.000…150.000s	0.005s	0.06s	Resetting time. The time allowed between pick-ups if the pick-up has not led into a trip operation. If the "Delayed pick-up release" setting is set to "Yes", the START signal is held on for the duration of the timer.
Op.Time calculation reset after release time	• No • Yes	-	Yes	Operating timer resetting characteristics selection. When set to "Yes", the operating time counter is reset after a set release time if the pick-up element is not activated during this time. When set to "No", the operating time counter is reset directly after the pick-up element is reset.
Continue time calculation during release time	• No • Yes	-	No	Time calculation characteristics selection. If set to "Yes", the operating time counter continues until a set release time even if the pick-up element is reset.

© Arcteq Relays Ltd

Figure. 5.4.1 - 75. No delayed pick-up release.

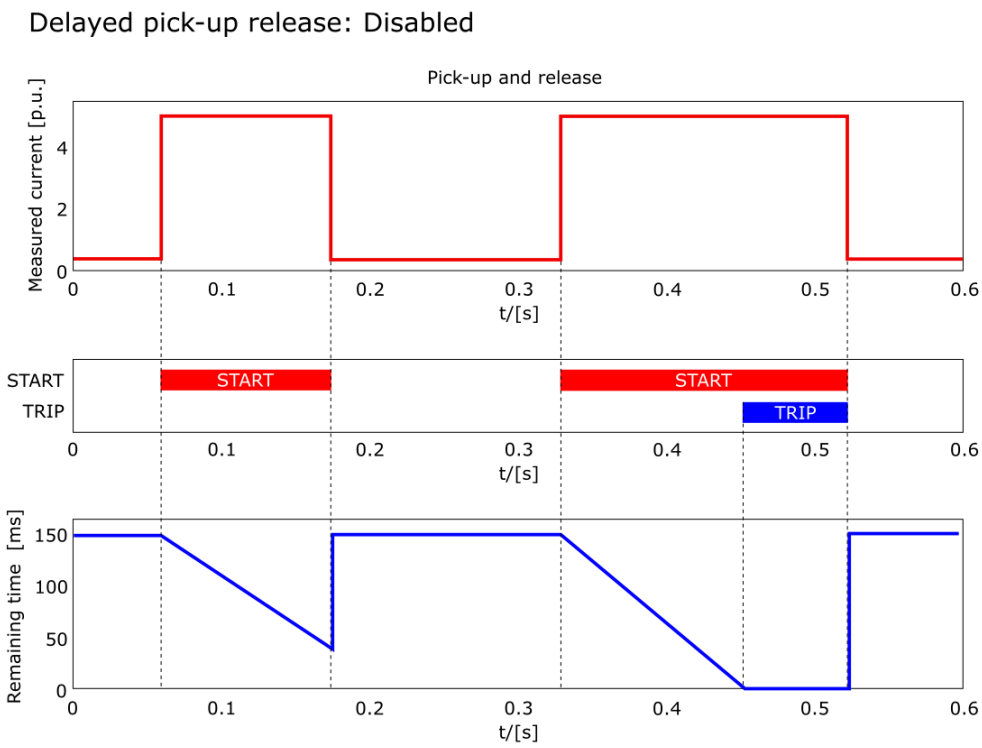

Figure. 5.4.1 - 76. Delayed pick-up release, delay counter is reset at signal drop-off.

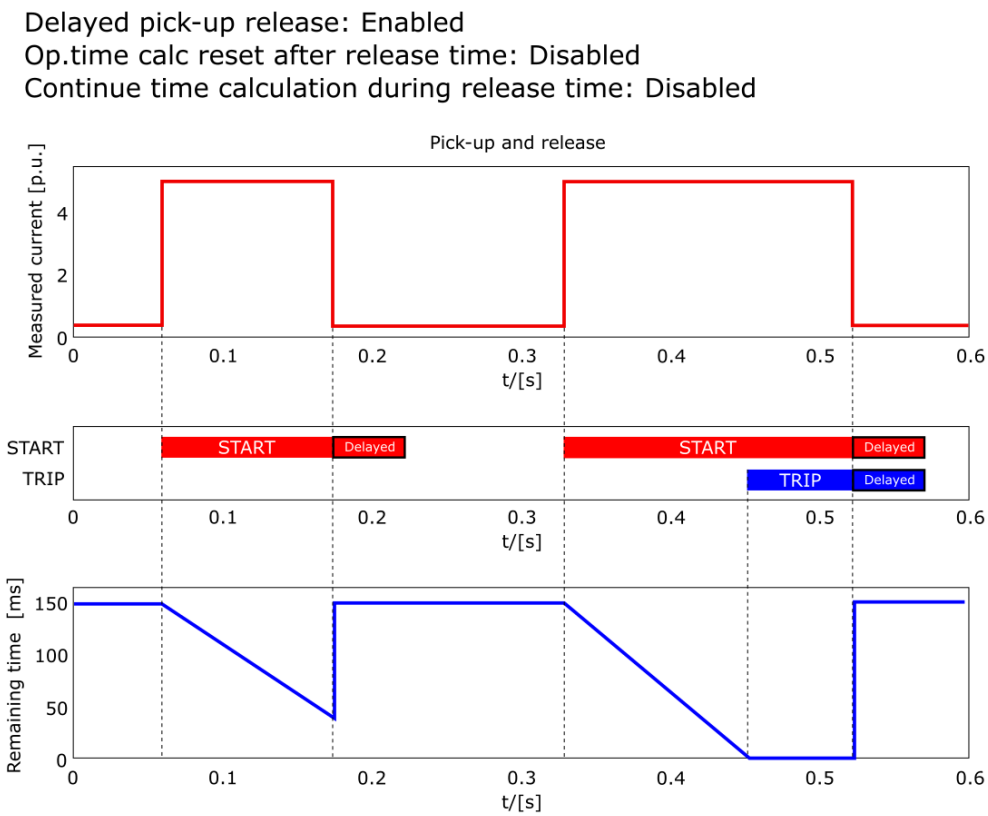

Figure. 5.4.1 - 77. Delayed pick-up release, delay counter value is held during the release time.

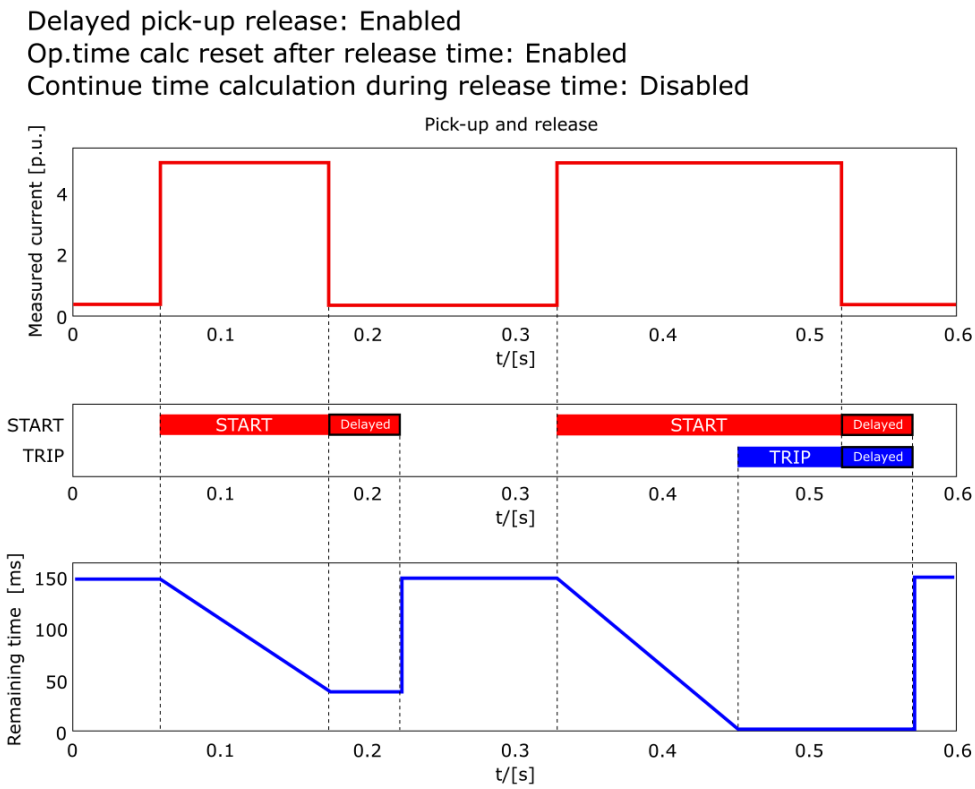

Figure. 5.4.1 - 78. Delayed pick-up release, delay counter value is decreasing during the release time.

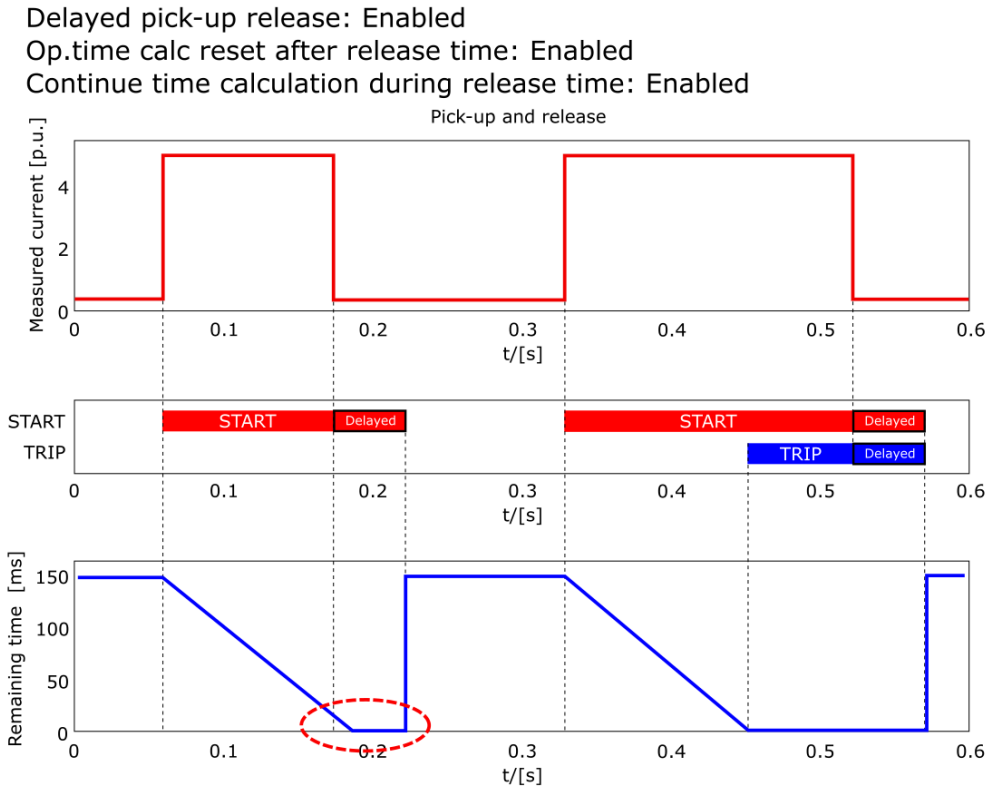

© Arcteq Relays Ltd
IM00014

Stage forcing

It is possible to test the logic, event processing and the operation of the device's logic by controlling the state of the protection functions manually without injecting any current into the device with stage forcing. To enable *Stage forcing* set the *Enable stage forcing* to ENABLED in the *General* menu. After this it is possible to control the status of a protection function (Normal, Start, Trip, Blocked etc.) in the *Info* page of the function.

> NOTICE!
> When *Stage forcing* is enabled protection functions will also change state through user input. Injected currents/voltages also affect the behavior of the device. Regardless, it is recommended to disable *Stage Forcing* after testing has ended.

5.4.2 Non-directional overcurrent protection (I>; 50/51)

The non-directional overcurrent function is used for instant and time-delayed overcurrent and short-circuit protection. The function is used for one-phase, two-phase or three-phase overcurrent and short circuit protection. The function offers four (4) independent stages. The operating decisions are based on phase current magnitude, constantly measured by the function.

Figure. 5.4.2 - 79. Simplified function block diagram of the I> function.

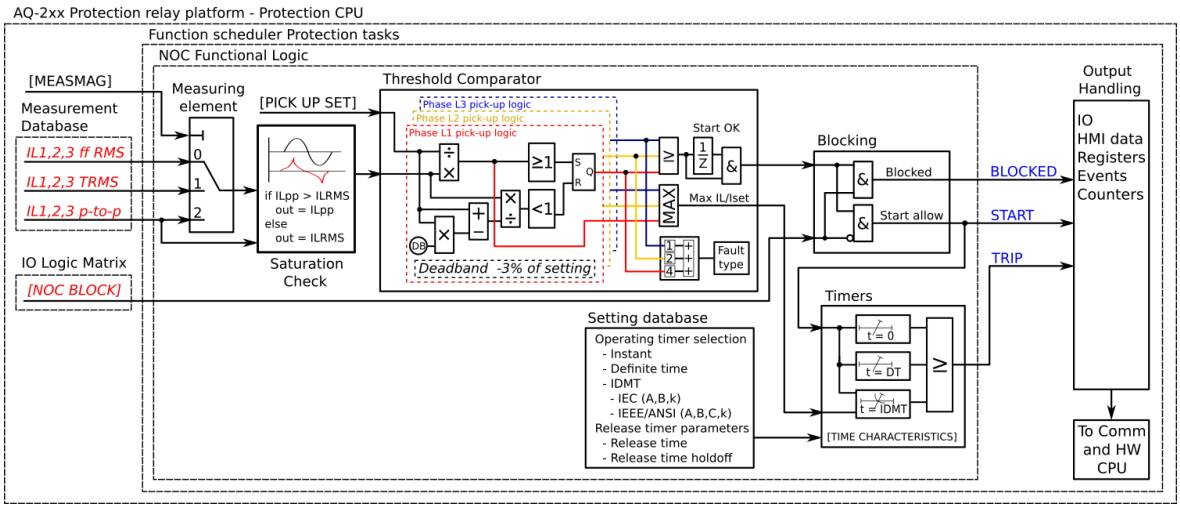

Measured input

The function block uses phase current measurement values. The user can select the monitored magnitude to be equal either to RMS values (fundamental frequency component), to TRMS values from the whole harmonic specter of 32 components, or to peak-to-peak values.

Table. 5.4.2 - 43. Measurement inputs of the I> function.

Signal	Description
I_{L1}RMS	Fundamental frequency component of phase L1 (A) current measurement
I_{L2}RMS	Fundamental frequency component of phase L2 (B) current measurement
I_{L3}RMS	Fundamental frequency component of phase L3 (C) current measurement
I_{L1}TRMS	TRMS measurement of phase L1 (A) current

Signal	Description
I_{L2}TRMS	TRMS measurement of phase L2 (B) current
I_{L3}TRMS	TRMS measurement of phase L3 (C) current
I_{L1}PP	Peak-to-peak measurement of phase L1 (A) current
I_{L2}PP	Peak-to-peak measurement of phase L2 (B) current
I_{L3}PP	Peak-to-peak measurement of phase L3 (C) current

General settings

The following general settings define the general behavior of the function. These settings are static i.e. it is not possible to change them by editing the setting group.

Table. 5.4.2 - 44. General settings of the function.

Name	Range	Default	Description
Setting control from comm bus	• Disabled • Allowed	• Disabled	Activating this parameter allows changing the pick-up level of the protection stage via SCADA.
I> force status to	• Normal • Start • Trip • Blocked • Start A • Start B • Start C • Trip A • Trip B • Trip C • Start AB • Start BC • Start CA • Start ABC • Trip AB • Trip BC • Trip CA • Trip ABC	• Normal	Force the status of the function. Visible only when *Enable stage forcing* parameter is enabled in *General* menu.
Measured magnitude	• RMS • TRMS • Peak-to-peak	• RMS	Defines which available measured magnitude is used by the function.

Pick-up settings

The I_{set} setting parameter controls the pick-up of the I> function. This defines the maximum allowed measured current before action from the function. The function constantly calculates the ratio between the I_{set} and the measured magnitude (I_m) for each of the three phases. The reset ratio of 97 % is built into the function and is always relative to the I_{set} value. The setting value is common for all measured phases, and when the I_m exceeds the I_{set} value (in single, dual or all phases) it triggers the pick-up operation of the function.

© Arcteq Relays Ltd
IM00014

Setting group selection controls the operating characteristics of the function, i.e. the user or user-defined logic can change function parameters while the function is running.

Table. 5.4.2 - 45. Pick-up settings.

Name	Range	Step	Default	Description
I_{set}	0.10…50.00×I_n	0.01×I_n	1.20×I_n	Pick-up setting

Read-only parameters

The function's *Info* page displays useful, real-time information on the state of the protection function. It is accessed either through the device's HMI display, or through the setting tool software when it is connected to the device and its Live Edit mode is active.

Table. 5.4.2 - 46. Information displayed by the function.

Name	Range	Step	Description
I> condition	• Normal • Start • Trip • Blocked	-	Displays status of the protection function.
I> phases condition	• Normal • Start A • Start B • Start C • Trip A • Trip B • Trip C • Start AB • Start BC • Start CA • Start ABC • Trip AB • Trip BC • Trip CA • Trip ABC	-	Displays the status of phases individually.
Expected operating time	0.000...1800.000s	0.005s	Displays the expected operating time when a fault occurs. When IDMT mode is used, the expected operating time depends on the measured highest phase current value. If the measured current changes during a fault, the expected operating time changes accordingly.
Time remaining to trip	-1800.000...1800.000s	0.005s	When the function has detected a fault and counts down time towards a trip, this displays how much time is left before tripping occurs.
I_{meas}/I_{set} at the moment	0.00...1250.00	0.01	The ratio between the highest measured phase current and the pick-up value.

Function blocking

The blocking signal is evaluated at the start of each program cycle. The blocking signals are connected to the function's dedicated input, which can be configured in the *IO → Blocking Input Control* tab of the function.

- When the pick-up element activates and the blocking signal is not active, a START signal is generated, and the function starts or continues with the trip time countdown.
- When the pick-up element activates and the blocking signal is active, a BLOCKED signal is generated, and the function does not process the event further.
- When a START signal is already active and the blocking input signal becomes active, the START signal is reset and BLOCKED signal is generated. The release time characteristics are then processed in the same way as when the pick-up signal is reset.

The blocking signal needs to reach the device minimum of 5 ms before the set operating delay has passed in order for the blocking to activate in time.

The function also offers an optional internal inrush harmonic blocking feature. If the inrush harmonic pick-up is active at the same time as the protection function pick-up element, the trip delay timer continues counting down as normal. Once the countdown reaches zero, if the pick-up element remains active and the second harmonic value has dropped, the function issues a trip.

Table. 5.4.2 - 47. Internal inrush harmonic blocking settings.

Name	Range	Step	Default	Description
Inrush harmonic blocking (internal-only trip)	• No • Yes	-	• No	Enables and disables the 2nd harmonic blocking.
2nd harmonic blocking limit (Iharm/Ifund)	0.10…50.00%I_{fund}	0.01%I_{fund}	0.01%I_{fund}	Defines the limit of the 2nd harmonic blocking.

Operating time characteristics for trip and reset

This function supports definite time delay (DT) and inverse definite minimum time delay (IDMT). For detailed information on these delay types please refer to the chapter "General properties of a protection function" and its section "Operating time characteristics".

Events and registers

The non-directional overcurrent function (abbreviated "NOC" in event block names) generates events and registers from the status changes in the events listed below. The user can select which event messages are stored in the main event buffer: ON, OFF, or both. The events triggered by the function are recorded with a time stamp.

The function's output can be used for direct I/O controlling and user logic programming. The function also provides a resettable cumulative counter for the START, TRIP and BLOCKED events.

Table. 5.4.2 - 48. Event messages.

Event block name	Event names
NOC1...NOC4	Start ON/OFF
NOC1...NOC4	Trip ON/OFF
NOC1...NOC4	Block ON/OFF
NOC1...NOC4	Phase A Start ON/OFF
NOC1...NOC4	Phase B Start ON/OFF
NOC1...NOC4	Phase C Start ON/OFF

© Arcteq Relays Ltd
IM00014

Event block name	Event names
NOC1...NOC4	Phase A Trip ON/OFF
NOC1...NOC4	Phase B Trip ON/OFF
NOC1...NOC4	Phase C Trip ON/OFF

The function registers its operation into the last twelve (12) time-stamped registers; this information is available for all provided instances separately. The register of the function records the ON event process data for START, TRIP or BLOCKED. The table below presents the structure of the function's register content.

Table. 5.4.2 - 49. Register content.

Name	Description
Date and time	dd.mm.yyyy hh:mm:ss.mss
Event	Event name
Fault type	L1-E…L1-L2-L3
Pre-trigger current	Start/Trip -20ms current
Fault current	Start/Trip current
Pre-fault current	Start -200ms current
Trip time remaining	0 ms...1800s
Setting group in use	Setting group 1...8 active.

5.4.3 Non-directional earth fault protection (I0>; 50N/51N)

The non-directional earth fault function is used for instant and time-delayed earth fault protection. The number of stages in the function depend on the device model. The operating characteristics are based on the selected neutral current magnitude which the function measures constantly.

Figure. 5.4.3 - 80. Simplified function block diagram of the I0> fucntion.

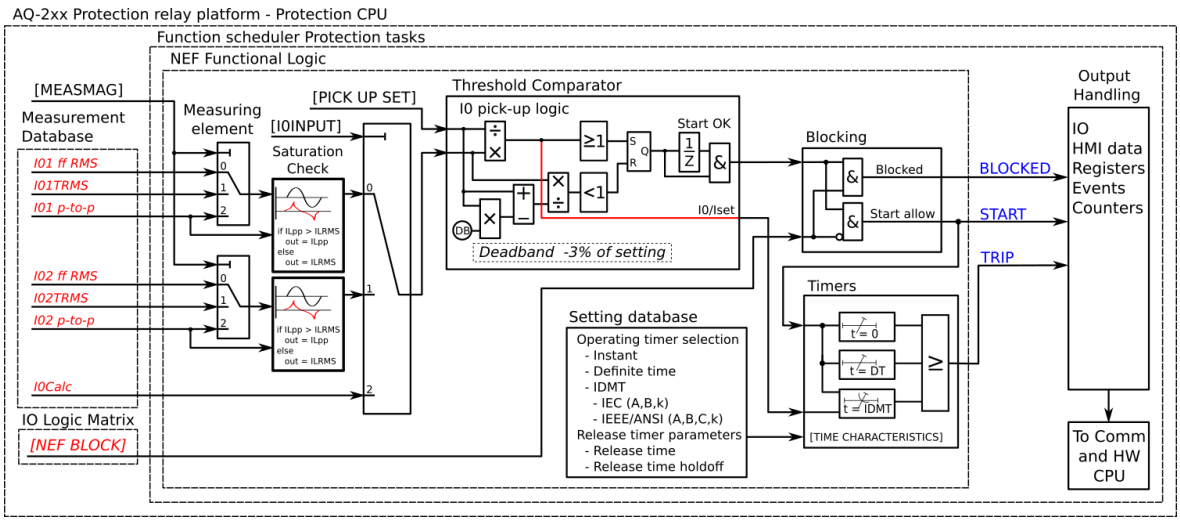

Measured input

The function block uses residual current measurement values. The available analog measurement channels are I_{01} and I_{02} (residual current measurement) and I_{0Calc} (residual current calculated from phase current). The user can select the monitored magnitude to be equal either to RMS values (fundamental frequency component), to TRMS values from the whole harmonic specter of 32 components, or to peak-to-peak values.

Table. 5.4.3 - 50. Measurement inputs of the I0> function.

Signal	Description
I_{01}RMS	Fundamental frequency component of coarse residual current measurement input I01
I_{01}TRMS	TRMS measurement of coarse residual current measurement input I01
I_{01}PP	Peak-to-peak measurement of coarse residual current measurement input I01
I_{02}RMS	Fundamental frequency component of sensitive residual current measurement input I02
I_{02}TRMS	TRMS measurement of coarse sensitive current measurement input I02
I_{02}PP	Peak-to-peak measurement of sensitive residual current measurement input I02
I_{0Calc}	Fundamental frequency component of the calculated zero sequence current calculated from the three phase currents

General settings

The following general settings define the general behavior of the function. These settings are static i.e. it is not possible to change them by editing the setting group.

Table. 5.4.3 - 51. General settings of the function.

Name	Range	Default	Description
Setting control from comm bus	• Disabled • Allowed	Disabled	Activating this parameter permits changing the pick-up level of the protection stage via SCADA.
I0> force status to	• Normal • Start • Trip • Blocked	Normal	Force the status of the function. Visible only when *Enable stage forcing* parameter is enabled in *General* menu.
Measured magnitude	• RMS • TRMS • Peak-to-peak	RMS	Defines which available measured magnitude is used by the function. This parameter is available when "Input selection" has been set to "I01" or "I02".
Input selection	• I01 • I02 • I0Calc	I01	Defines which measured residual current is used by the function.

© Arcteq Relays Ltd
IM00014

Pick-up settings

The $I0_{set}$ setting parameter controls the the pick-up of the I0> function. This defines the maximum allowed measured current before action from the function. The function constantly calculates the ratio between the $I0_{set}$ and the measured magnitude (I_m) for each of the three phases. The reset ratio of 97 % is built into the function and is always relative to the $I0_{set}$ value. The setting value is common for all measured phases. When the I_m exceeds the $I0_{set}$ value (in single, dual or all phases) it triggers the pick-up operation of the function.

Setting group selection controls the operating characteristics of the function, i.e. the user or user-defined logic can change function parameters while the function is running.

Table. 5.4.3 - 52. Pick-up settings.

Name	Range	Step	Default	Description
$I0_{set}$	0.0001…40.00 × I_n	0.0001 × I_n	1.20 × I_n	Pick-up setting

Read-only parameters

The function's *Info* page displays useful, real-time information on the state of the protection function. It is accessed either through the device's HMI display, or through the setting tool software when it is connected to the device and its Live Edit mode is active.

Table. 5.4.3 - 53. Information displayed by the function.

Name	Range	Step	Description
I0> condition	• Normal • Start • Trip • Blocked	-	Displays status of the protection function.
Detected I0 angle	-360.00...360.00 deg	0.01 deg	Angle of I0 against reference. If phase voltages are available, positive sequence voltage angle is used as reference. If voltages are not available, positive sequence current angle is used as reference.
Detected fault type	• - • A-G-R • B-G-F • C-G-R • A-G-F • B-G-R • C-G-F	-	Displays the detected fault type and direction of previous fault. "A/B/C" stand for one of the three phases. "G" stands for "ground". "F" stands for "forward" direction and "R" stands for "reverse" direction.
Expected operating time	-1800.000...1800.000 s	0.005 s	Displays the expected operating time when a fault occurs. When IDMT mode is used, the expected operating time depends on the measured current value. If the measured current changes during a fault, the expected operating time changes accordingly.
Time remaining to trip	0.000...1800.000 s	0.005 s	When the function has detected a fault and counts down time towards a trip, this displays how much time is left before tripping occurs.
I_{meas}/I_{set} at the moment	0.00...1250.00	0.01	The ratio between the measured current and the pick-up value.

Function blocking

The blocking signal is evaluated at the start of each program cycle. The blocking signals are connected to the function's dedicated input, which can be configured in the *IO → Blocking Input Control* tab of the function.

- When the pick-up element activates and the blocking signal is not active, a START signal is generated, and the function starts or continues with the trip time countdown.
- When the pick-up element activates and the blocking signal is active, a BLOCKED signal is generated, and the function does not process the event further.
- When a START signal is already active and the blocking input signal becomes active, the START signal is reset and BLOCKED signal is generated. The release time characteristics are then processed in the same way as when the pick-up signal is reset.

The blocking signal needs to reach the device minimum of 5 ms before the set operating delay has passed in order for the blocking to activate in time.

The function also offers an optional internal inrush harmonic blocking feature. If the inrush harmonic pick-up is active at the same time as the protection function pick-up element, the trip delay timer continues counting down as normal. Once the countdown reaches zero, if the pick-up element remains active and the second harmonic value has dropped, the function issues a trip.

Table. 5.4.3 - 54. Internal inrush harmonic blocking settings.

Name	Range	Step	Default	Description
Inrush harmonic blocking (internal-only trip)	• No • Yes	-	• No	Enables and disables the 2nd harmonic blocking.
2nd harmonic blocking limit (Iharm/Ifund)	0.10…50.00%Ifund	0.01%Ifund	0.01%Ifund	Defines the limit of the 2nd harmonic blocking.

Operating time characteristics for trip and reset

This function supports definite time delay (DT) and inverse definite minimum time delay (IDMT). For detailed information on these delay types please refer to the chapter "General properties of a protection function" and its section "Operating time characteristics".

Events and registers

The non-directional earth fault function (abbreviated "NEF" in event block names) generates events and registers from the status changes in the events listed below. The user can select which event messages are stored in the main event buffer: ON, OFF, or both. The events triggered by the function are recorded with a time stamp.

The function's outputs can be used for direct I/O controlling and user logic programming. The function also provides a resettable cumulative counter for the START, TRIP and BLOCKED events.

The function offers four (4) independent stages; the events are segregated for each stage operation.

Table. 5.4.3 - 55. Event messages.

Event block name	Event names
NEF1...NEF4	Start ON/OFF

© Arcteq Relays Ltd
IM00014

Event block name	Event names
NEF1...NEF4	Trip ON/OFF
NEF1...NEF4	Block ON/OFF

The function registers its operation into the last twelve (12) time-stamped registers. The register of the function records the ON event process data for START, TRIP or BLOCKED. The table below presents the structure of the function's register content.

Table. 5.4.3 - 56. Register content.

Name	Description
Date and time	dd.mm.yyyy hh:mm:ss.mss
Event	Event name
Fault type	A-G-R…C-G-F
Pre-trigger current	Start/Trip -20ms current
Fault current	Start/Trip current
Pre-fault current	Start -200ms current
Trip time remaining	0 ms...1800s
Setting group in use	Setting group 1...8 active.

5.4.4 Directional overcurrent protection (Idir>; 67)

The directional overcurrent function is used for instant and time-delayed overcurrent and short-circuits. A device with both voltage and current protection modules can have four (4) available stages of the function (Idir>, Idir>>, Idir>>>, Idir>>>>). The operating decisions are based on phase current magnitudes which the function constantly measures.

Figure. 5.4.4 - 81. Simplified function block diagram of the Idir> function.

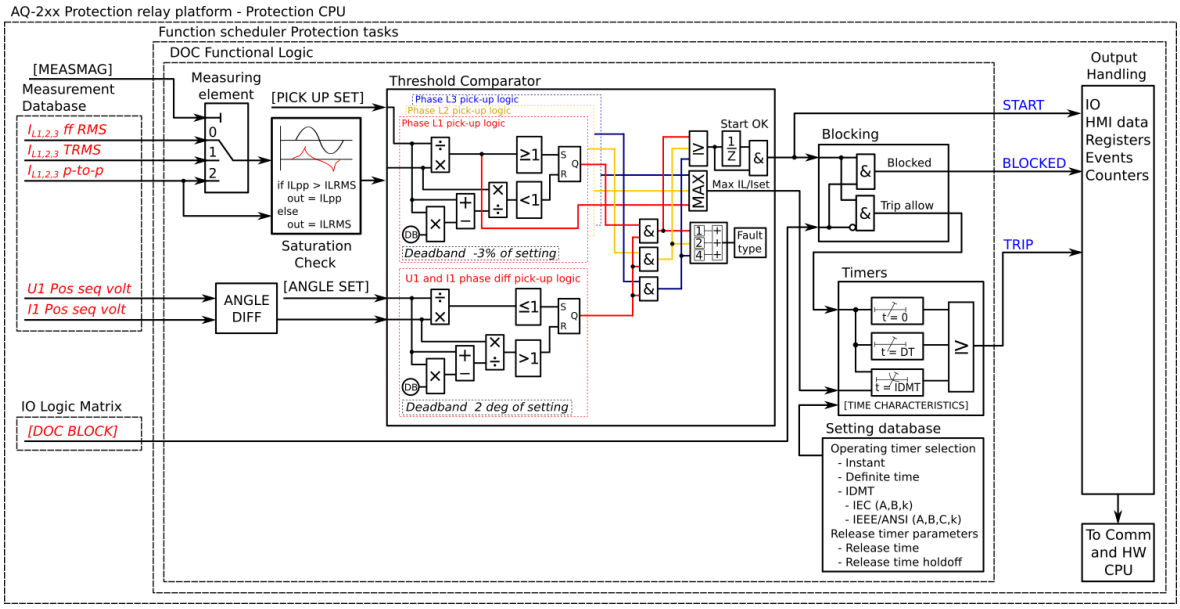

Measured input

The function block uses phase current and voltage measurement values. The user can select the monitored current magnitude to be equal either to RMS values (fundamental frequency component), to TRMS values from the whole harmonic specter of 32 components, or to peak-to-peak values.

The fault current angle is based on the comparison between the positive sequence voltage U_1 and the positive sequence current I_1. If the positive sequence voltage is not available (three line-to-line voltages but no U_0), the voltage angle is based on a faulty phase line-to-line voltage. If the voltage drops below 1 V in the secondary side during a fault, the voltage memory is used for 0.5 seconds. After that the reference angle of voltage is forced to 0°.

Table. 5.4.4 - 57. Measurement inputs of the Idir> function.

Signal	Description
I_{L1}RMS	Fundamental frequency component of phase L1 (A) current measurement
I_{L2}RMS	Fundamental frequency component of phase L2 (B) current measurement
I_{L3}RMS	Fundamental frequency component of phase L3 (C) current measurement
I_{L1}TRMS	TRMS measurement of phase L1 (A) current
I_{L2}TRMS	TRMS measurement of phase L2 (B) current
I_{L3}TRMS	TRMS measurement of phase L3 (C) current
I_{L1}PP	Peak-to-peak measurement of phase L1 (A) current
I_{L2}PP	Peak-to-peak measurement of phase L2 (B) current
I_{L3}PP	Peak-to-peak measurement of phase L3 (C) current
U_1RMS	Fundamental frequency component of U_1/V voltage measurement
U_2RMS	Fundamental frequency component of U_2/V voltage measurement

© Arcteq Relays Ltd
IM00014

Signal	Description
U_3RMS	Fundamental frequency component of U_3/V voltage measurement
U_4RMS	Fundamental frequency component of U_4/V voltage measurement

General settings

The following general settings define the general behavior of the function. These settings are static i.e. it is not possible to change them by editing the setting group.

Table. 5.4.4 - 58. General settings of the function.

Name	Range	Default	Description
Idir> force status to	• Normal • Start • Trip • Blocked	Normal	Force the status of the function. Visible only when *Enable stage forcing* parameter is enabled in *General* menu.
Measured magnitude	• RMS • TRMS • Peak-to-peak	RMS	Defines which available measured magnitude is used by the function.

Pick-up settings

The I_{set} setting parameter controls the pick-up of the I> function. This defines the maximum allowed measured current before action from the function. The function constantly calculates the ratio between the I_{set} and the measured magnitude (I_m) for each of the three phases. The reset ratio of 97 % is built into the function and is always relative to the I_{set} value. The setting value is common for all measured phases, and when the I_m exceeds the I_{set} value (in single, dual or all phases) it triggers the pick-up operation of the function.

The trip characteristic can be set to directional or non-directional. In the non-directional mode only the pick-up value of the positive sequence current magnitude must be fulfilled in order for the function to trip. In the directional mode the fault must also be in the monitored direction to fulfill the terms to trip. By default, the tripping area is ±88° (176°). The reference angle is based on the calculated positive sequence voltage U_1 angle. If the U_1voltage is not available and only line-to-line voltages are measured, the reference angle is based on a healthy line-to-line voltage. During a short-circuit the reference angle is based on impedance calculation.

If the voltage drops below 1 V in the secondary side, the angle memory is used for 0.5 seconds. The angle memory forces the reference angle to be equal to the value measured or calculated before the fault. The angle memory captures the measured voltage angle 100 ms before the fault starts. After 0.5 seconds the angle memory is no longer used, and the reference angle is forced to 0°. The inbuilt reset ratio for the tripping area angle is 2°.

Setting group selection controls the operating characteristics of the function, i.e. the user or user-defined logic can change function parameters while the function is running.

Table. 5.4.4 - 59. Pick-up settings.

Name	Range	Step	Default	Description
Characteristic direction	• Directional • Non-directional	-	Directional	Switches between directional and non-directional overcurrent mode.
Operating sector size (+ / -)	±1.0…170.0°	0.1°	±88°	Pick-up area size in degrees.
Operating sector center	-180.0…180.0°	0.1°	0°	Turns the operating sector
Pick-up setting I_{set}	0.10…40.00×I_n	0.01×I_n	1.20×I_n	Pick-up setting

Figure. 5.4.4 - 82. Angle tracking of the Idir> function (3LN/3LL + U_0 mode).

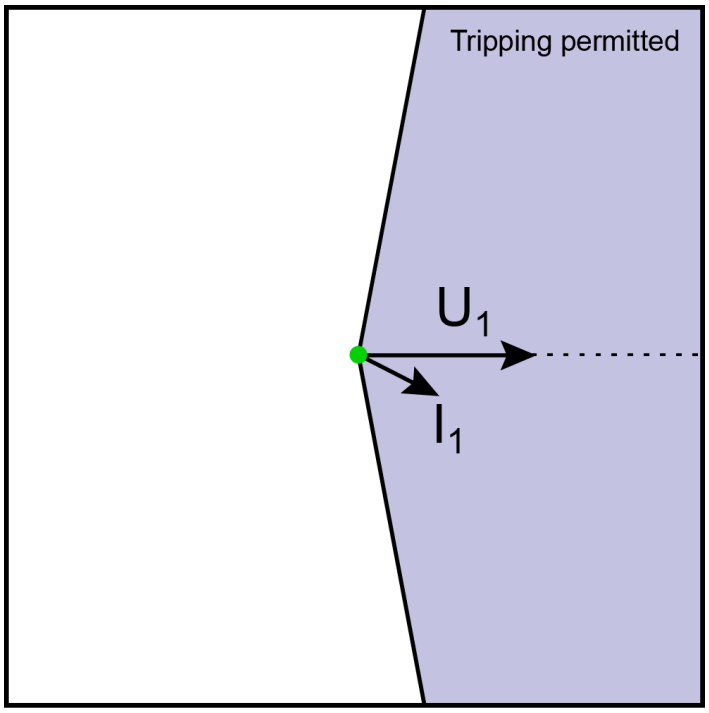

Please note in the picture above that the tripping area is linked to the angle of the positive sequence voltage U_1. The angle of the positive sequence current I_1 is compared to U_1 angle, and if the fault is in the correct direction, it is possible to perform a trip when the amplitude of I_{L1}, I_{L2} or I_{L3} increases above the pick-up limit.

If the 3LL mode is used without the U_0 measurement in a single-phase fault situation, the voltage reference comes from the healthy phase and the current reference from the faulty phase. In a short-circuit the angle comes from impedance calculation.

© Arcteq Relays Ltd
IM00014

Figure. 5.4.4 - 83. Operation sector area when the sector center has been set to -45 degrees.

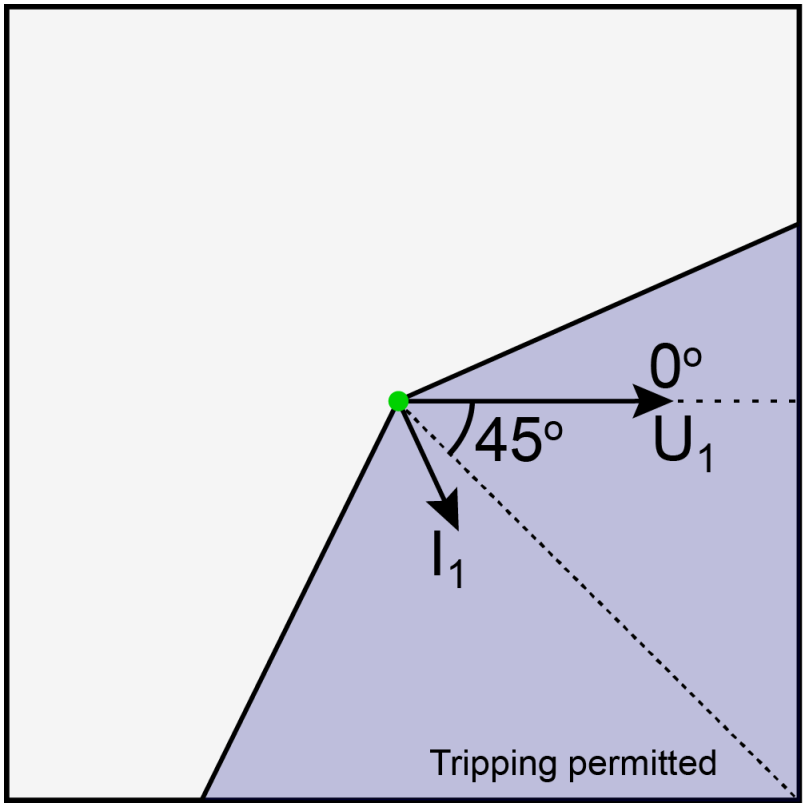

Figure. 5.4.4 - 84. When Idir> function has been set to "Non-directional" the function works basically just like a traditional non-directional overcurrent protection function.

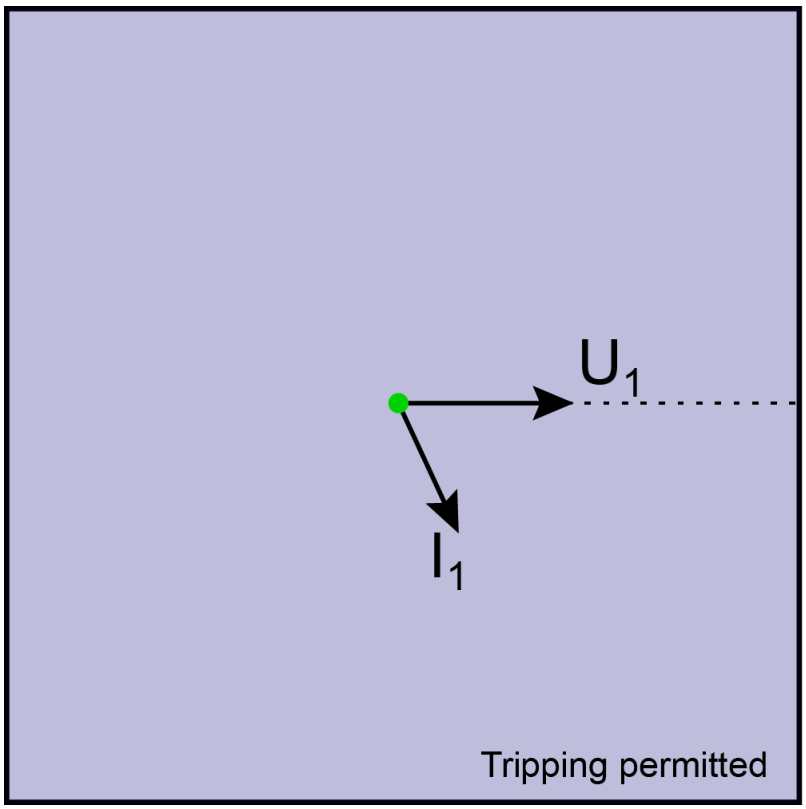

Read-only parameters

The function's *Info* page displays useful, real-time information on the state of the protection function. It is accessed either through the device's HMI display, or through the setting tool software when it is connected to the device and its Live Edit mode is active.

Table. 5.4.4 - 60. Information displayed by the function.

Name	Range	Step	Description
Operating angle now	-360.00...360.00deg	0.01deg	The positive sequence current angle in relation to the positive sequence voltage.
Expected operating time	0.000...1800.00s	0.005s	Displays the expected operating time when a fault occurs. When IDMT mode is used, the expected operating time depends on the highest measured phase current value. If the measured current changes during a fault, the expected operating time changes accordingly.
Time remaining to trip	-1800.000...1800.00s	0.005s	When the function has detected a fault and counts down time towards a trip, this displays how much time is left before tripping occurs.
I_{meas}/I_{set} at the moment	0.00...1250.00I_m/I_{set}	0.01I_m/I_{set}	The ratio between the highest measured phase current and the pick-up value.

Function blocking

The blocking signal is evaluated at the start of each program cycle. The blocking signals are connected to the function's dedicated input, which can be configured in the *IO → Blocking Input Control* tab of the function.

- When the pick-up element activates and the blocking signal is not active, a START signal is generated, and the function starts or continues with the trip time countdown.
- When the pick-up element activates and the blocking signal is active, a BLOCKED signal is generated, and the function does not process the event further.
- When a START signal is already active and the blocking input signal becomes active, the START signal is reset and BLOCKED signal is generated. The release time characteristics are then processed in the same way as when the pick-up signal is reset.

The blocking signal needs to reach the device minimum of 5 ms before the set operating delay has passed in order for the blocking to activate in time.

The function also offers an optional internal inrush harmonic blocking feature. If the inrush harmonic pick-up is active at the same time as the protection function pick-up element, the trip delay timer continues counting down as normal. Once the countdown reaches zero, if the pick-up element remains active and the second harmonic value has dropped, the function issues a trip.

Table. 5.4.4 - 61. Internal inrush harmonic blocking settings.

Name	Range	Step	Default	Description
Inrush harmonic blocking (internal-only trip)	• No • Yes	-	• No	Enables and disables the 2nd harmonic blocking.

© Arcteq Relays Ltd
IM00014

Name	Range	Step	Default	Description
2nd harmonic blocking limit (Iharm/Ifund)	0.10…50.00%I_{fund}	0.01%I_{fund}	0.01%I_{fund}	Defines the limit of the 2nd harmonic blocking.

Operating time characteristics for trip and reset

This function supports definite time delay (DT) and inverse definite minimum time delay (IDMT). For detailed information on these delay types please refer to the chapter "General properties of a protection function" and its section "Operating time characteristics".

Events and registers

The directional overcurrent function (abbreviated "DOC" in event block names) generates events and registers from the status changes in the events listed below. The user can select which event messages are stored in the main event buffer: ON, OFF, or both. The events triggered by the function are recorded with a time stamp.

The function's outputs can be used for direct I/O controlling and user logic programming. The function also provides a resettable cumulative counter for the START, TRIP and BLOCKED events.

The function offers four (4) independent stages; the events are segregated for each stage operation.

Table. 5.4.4 - 62. Event messages.

Event block name	Event names
DOC1...DOC4	Start ON/OFF
DOC1...DOC4	Trip ON/OFF
DOC1...DOC4	Block ON/OFF
DOC1...DOC4	No voltage, Blocking ON/OFF
DOC1...DOC4	Measuring live angle ON/OFF
DOC1...DOC4	Using voltmem ON/OFF

The function registers its operation into the last twelve (12) time-stamped registers; this information is available for all provided instances separately. The register of the function records the ON event process data for START, TRIP or BLOCKED. The table below presents the structure of the function's register content.

Table. 5.4.4 - 63. Register content.

Register name	Description
Date and time	dd.mm.yyyy hh:mm:ss.mss
Event	Event name
Fault type	L1-E...L1-L2-L3
Pre-trigger current	Start/Trip -20ms current
Fault current	Start/Trip current

Register name	Description
Pre-fault current	Start -200ms averages
Trip time remaining	0s...1800s
Setting group in use	Setting group 1...8 active
Operating angle	0...250°

5.4.5 Directional earth fault protection (I0dir>; 67N/32N)

The directional earth fault function is used for instant and time-delayed earth fault protection. A device with both voltage and current protection modules can have four (4) stages in the function (I0dir>, I0dir>>, I0dir>>>, I0dir>>>>). The operating decisions are based on selected neutral current and voltage magnitudes which the function constantly measures.

Figure. 5.4.5 - 85. Simplified function block diagram of the I0dir> function.

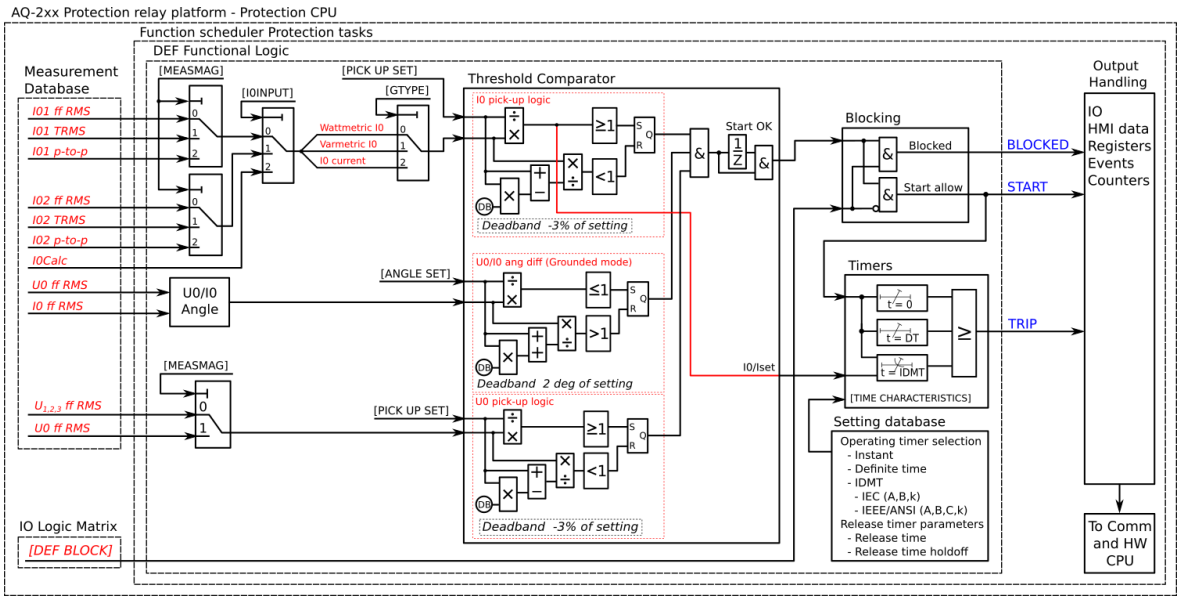

Measured input

The function block uses residual current measurement values and neutral voltage measurement values. The available residual current measurement channels are I_{01} and I_{02} (residual current measurement) and I0Calc (residual current calculated from phase current).The user can select the monitored current magnitude to be equal either to RMS values (fundamental frequency component), to TRMS values from the whole harmonic specter of 32 components, or to peak-to-peak values.

The fault current angle is based on comparing the neutral voltage U_0 angle to the residual current I_0 angle. Both I_0 and U_0 must be above the squelch limit to be able to detect the angle. The squelch limit for the I_0 current is 0.01 x I_n and for the U_0 voltage 0.01 x U_n.

Table. 5.4.5 - 64. Measurement inputs of the I0dir> function.

Signal	Description
I_{01}RMS	Fundamental frequency component of coarse residual current measurement input I01

© Arcteq Relays Ltd
IM00014

Signal	Description
I_{01}TRMS	TRMS measurement of coarse residual current measurement input I01
I_{01}PP	Peak-to-peak measurement of coarse residual current measurement input I01
I_{02}RMS	Fundamental frequency component of sensitive residual current measurement input I02
I_{02}TRMS	TRMS measurement of coarse sensitive current measurement input I02
I_{02}PP	Peak-to-peak measurement of sensitive residual current measurement input I02
I_{0Calc}	Fundamental frequency component of residual current calculated from the three phase currents
U_0RMS	Fundamental frequency component of zero sequence voltage measurement input U0
U_{0Calc}	Fundamental frequency component of of the zero sequence voltage calculated from the three phase voltages

General settings

The following general settings define the general behavior of the function. These settings are static i.e. it is not possible to change them by editing the setting group.

Table. 5.4.5 - 65. General settings of the function.

Name	Range	Default	Description
I0dir> force status to	• Normal • Start • Trip • Blocked • Unearthed Start • Unearthed Trip • Compensated Start • Compensated Trip	Normal	Force the status of the function. Visible only when *Enable stage forcing* parameter is enabled in *General* menu.
U0 directional reference	• U0 • -U0	U0	If the connected neutral voltage polarity is opposite to the connected residual current, this parameter can swap the angle reference.
U0> Meas input select	• Select • U0 Calculated • U3 Input • U4 Input	Select	Defines which available neutral voltage measurement is used. Available neutral voltages depend on measurement settings (*Measurements* → *Transformers* → *VT module*).
Measured magnitude	• RMS • TRMS • Peak-to-peak	RMS	Defines which available measured magnitude is used by the function. This parameter is available when "Input selection" has been set to "I01" or "I02".
Input selection	• I01 • I02 • I0Calc	I01	Defines which measured residual current is used by the function.

Pick-up settings

The the pick-up of the I0dir> function is controlled by the $I0_{set}$ setting parameter and the $U0_{set}$ setting parameter. The former defines the maximum allowed measured current, while the latter defines the maximum allowed measured voltage and checks the angle difference before action from the function. The function constantly calculates the ratio between the $I0_{set}$ and the $U0_{set}$ and the measured magnitudes ($I_m$and U_m). The reset ratio of 97 % is built into the function and is always relative to the $I0_{set}$ (or $U0_{set}$) value. When the I_m exceeds the $I0_{set}$ value it triggers the pick-up operation of the function.

Setting group selection controls the operating characteristics of the function, i.e. the user or user-defined logic can change function parameters while the function is running.

Table. 5.4.5 - 66. Pick-up settings.

Name	Range	Step	Default	Description
Grounding type	• Unearthed [32N Var] • Petersen coil GND [32N Watt] • Grounded [67N] • $I0_{Cos}$ & $I0_{Sin}$ broad range with MCD [32N Var/ Watt]	-	Unearthed	Network grounding method
Pick-up setting $I0_{set}$>	0.005…40.00×I_n	0.001×I_n	1.20×I_n	Current pick-up setting. If broadrange mode is selected, unearthed and compensated networks have separate pick-up settings.
Comp. pick-up setting $I0_{set}$ (I0Cosfi)>				
Unearth. pick-up setting $I0_{set}$ (I0Sinfi)>				
Pick-up setting $U0_{set}$>	1…75%U_n	0.01%U_n	20%U_n	Voltage pick-up setting. If broadrange mode is selected, unearthed and compensated networks have separate pick-up settings.
Comp. pick-up setting $U0_{set}$ (I0Cosfi)>				
Unearth. pick-up setting $U0_{set}$ (I0Sinfi)>				
Multi-criteria detection	• Not used • Used	-	Not used	Activation of detecting healthy or unhealthy feeder by analyzing symmetrical components of currents and voltages. Visible when broadrange mode is used.

© Arcteq Relays Ltd
IM00014

Name	Range	Step	Default	Description
Unearthed/ Compensated border angle	-45.0…90°	0.1°	45°	Dividing the angle between unearthed and compensated tripping (see description later in this document). Visible when earthing type is set to $I0_{Cos}$ & $I0_{Sin}$ broad range mode.
Resistive (I0Cosfi) mode I0 angle blinder.	-90.0…0.0°	0.1°	-90°	I0 angle blinder. Used in broadrange and Petersen coil grounded mode. Not in use when set to zero.
Tripping area size (+ / -)	±45.0…135.0°	0.1°	±88°	Defines the tripping area sector size in grounded network mode.
Tripping area center	-360.00…360.00	0.1°	0.0°	Turns the tripping area in grounded network mode.

Unearthed network

Figure. 5.4.5 - 86. Angle tracking of I0dir> function (unearthed network model) (32N)

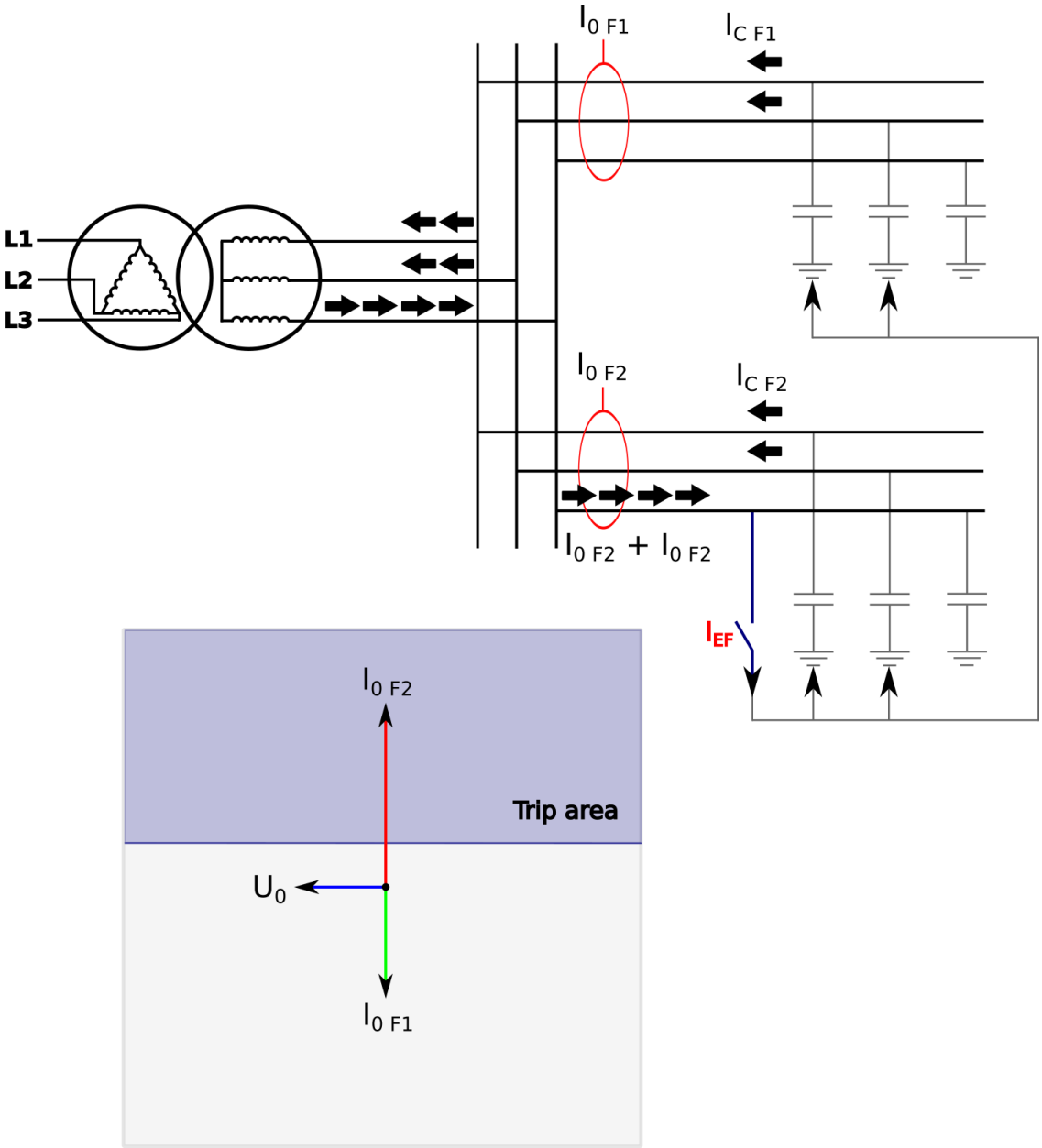

When the unearthed (capacitive) network mode is chosen, the function expects the fault current to be lagging zero sequence voltage by 90 degrees. Healthy phases of healthy feeders produce capacitive current during earth fault just like a faulty feeder but the current is floating towards the busbar and through an incoming feeder transformer or a earthing transformer and into a faulty feeder. Healthy feeders do not trip since capacitive current is floating to the opposite direction and selective tripping can be ensured.

The amplitude of the fault current depends on the capacitance of the network. The outgoing feeders are the sources for capacitive currents. The bigger the network the greater the capacitive current during a fault. Each outgoing feeder produces capacitance according to the zero sequence capacitive reactance of the line (ohms per kilometer). It is normal that in cable networks fault currents are higher than in overhead lines.

© Arcteq Relays Ltd
IM00014

The resistance of the fault affects the size of the voltage drop during a fault. In direct earth fault the zero sequence voltage amplitude is equal to the system's line-to-earth voltage. In direct earth fault the voltage of a faulty phase drops close to zero and healthy phase voltages increase to the amplitude of line-to-line voltages.

Petersen coil earthed (Compensated) network (32N)

There are many benefits to a Petersen coil earthed network. The amount of automatic reclosing is highly decreased and the maintenance of the breakers is therefore diminished. Arc faults die on their own, and cables and equipment suffer less damage. In emergency situations a line with an earth fault can be used for a specific time.

Figure. 5.4.5 - 87. Angle tracking of I0dir> function (Petersen coil earthed network model).

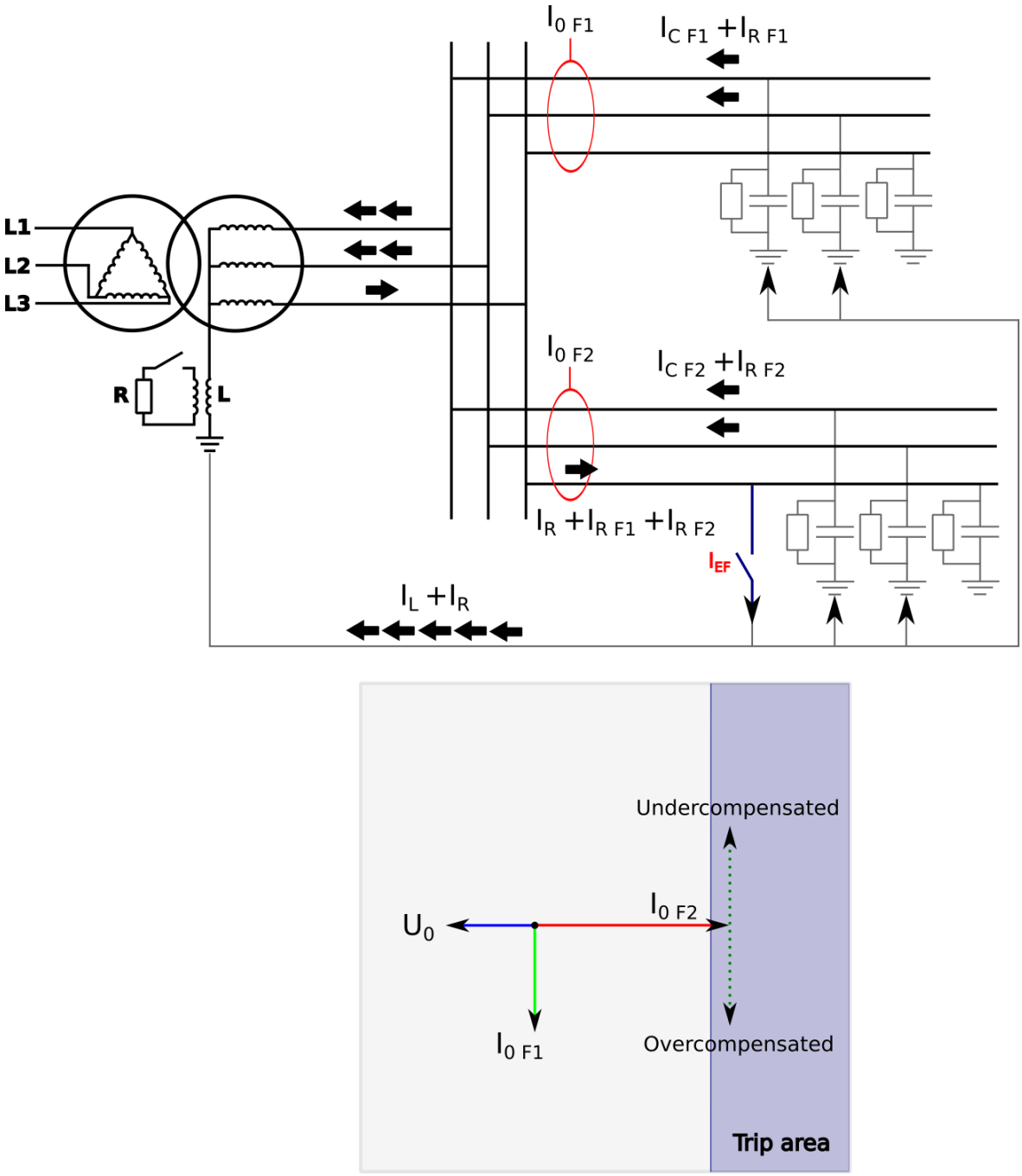

When the Petersen coil earthed (compensated) network mode is chosen, the function expects the fault current to be in the opposite direction to the zero sequence voltage. Healthy phases of both healthy and faulty feeders produce a capacitive current similar to the unearthed network. The inductance of the Petersen coil compensates the capacitive current and therefore the residual current in a fault location is close to zero. The size of the inductance is chosen according to the prospective earth fault current of the network. The desired compensation grade is achieved when the K factor is close to 1.0 and the network is fully compensated. The network is overcompensated when the K factor is greater than 1.0, and undercompensated when the K factor is smaller than 1.0.

The inductance connected to the star point of an incoming feeder transformer or -as in most cases- to a earthing transformer compensates the capacitance of the network; however, this prevents the capacitive fault current to be measured. The fault detection is handled by connecting the resistance in parallel with the inductance. This resistance includes the amplitude of the fault current. In undercompensated or overcompensated situations the resistive component does not change during the fault; therefore, selective tripping is ensured even when the network is slightly undercompensated or overcompensated.

© Arcteq Relays Ltd

Directly earthed or small impedance network (67N)

Figure. 5.4.5 - 88. Angle tracking of I0dir> function (directly earthed or small impedance network).

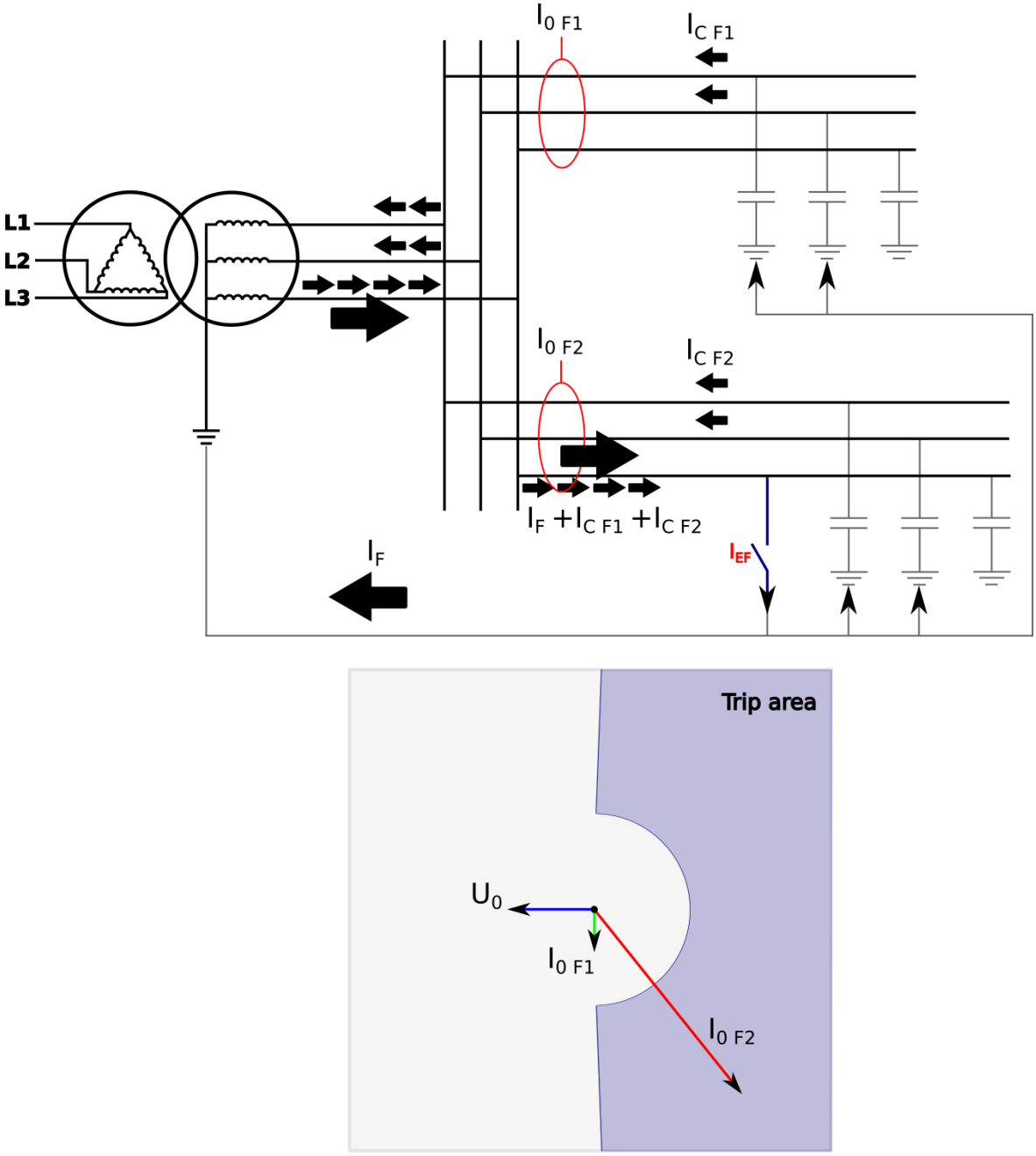

In a directly earthed network the amplitude of a single-phase fault current is similar to the amplitude of a short-circuit current. Directly earthed or small impedance network schemes are normal in transmission, distribution and industry.

The phase angle setting of the tripping area is adjustable as is the base direction of the area (angle offset).

Broad range mode with multi-criteria detection for unearthed and compensated networks

When detecting earth faults in compensated long-distance cables and overhead lines, it is in some cases difficult to distinguish between a healthy and a faulty feeder. Merely measuring the angle and the magnitude of residual voltage and currents is not always enough, as changes in symmetrical components of phase currents and voltages are also needed. Additionally, when protecting feeders from earth faults, two modes are used depending on the network status (unearthed or compensated). When changing between these two statuses the setting group must be changed, and especially with distributed compensation the change may be difficult or impossible to arrange. Finally, in a compensated network protection relays with traditional algorithms may sporadically detect an earth fault in a long healthy feeder due to CT errors. For all these reasons, Arcteq has developed an improved alternative to these traditional directional earth fault protections.

Figure. 5.4.5 - 89. Angle tracking of the I0dir> function (broad range mode).

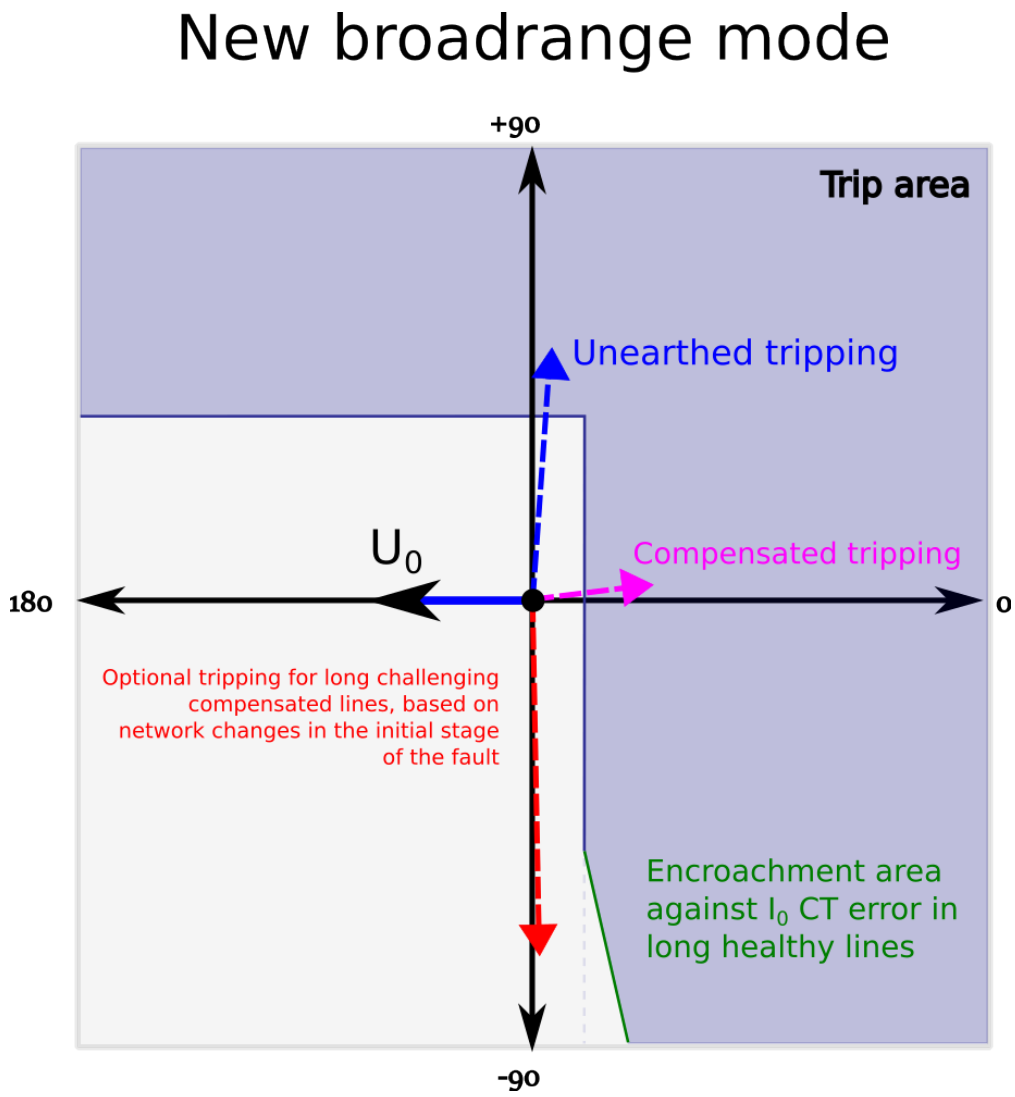

© Arcteq Relays Ltd
IM00014

The new broad range mode is capable of detecting an earth fault directionally in both unearthed and compensated networks not only by combining the two stages together but by using a new multi-criteria detection. This optional additional tripping condition for compensated networks uses Arcteq's patented, high-resolution intermittent earth fault algorithm with added symmetrical component calculation of phase currents and voltages. If this mode is activated, the alarming criteria is comprised of a measured residual current in the fourth quadrant and the symmetrical components of voltages and currents detecting a fault. No extra parameterization is required compared to the traditional method. The multi-criteria algorithm can be tested with COMTRADE files supplied by Arcteq. The function requires a connection of three-phase currents, residual current and residual voltage to operate correctly.

To avoid unnecessary alarms the user can add an encroachment area against I0 CT errors in compensated long healthy lines.

Figure. 5.4.5 - 90. Effect of angle divider when in use and when disabled.

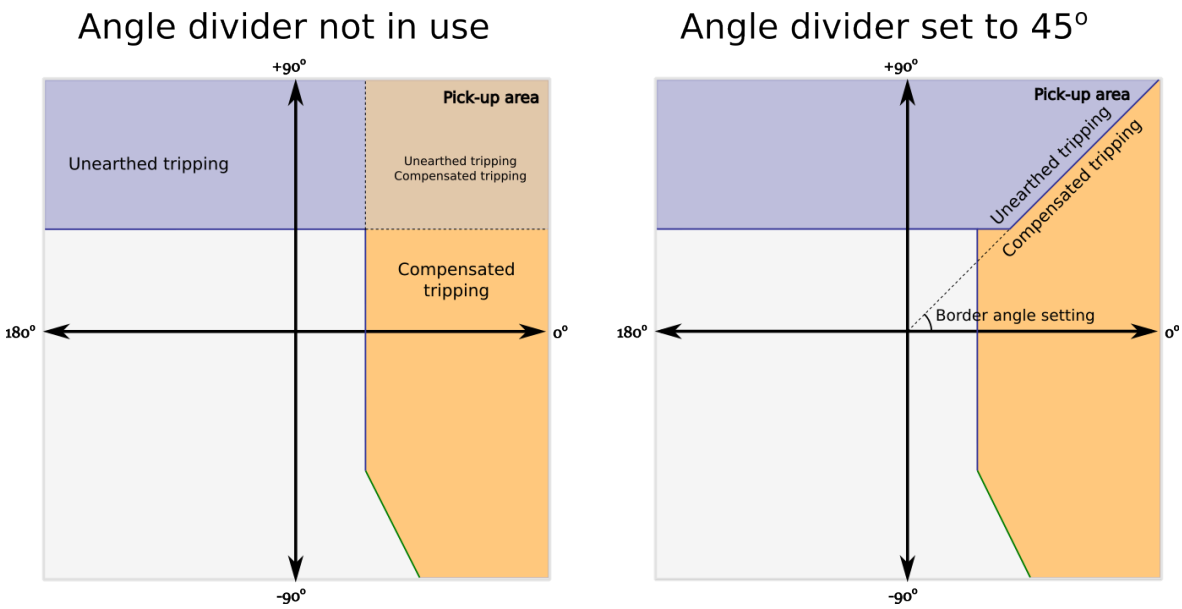

To receive a more accurate indication as to whether the fault was in a compensated or an unearthed network the angle divider can divide the area which would otherwise be overlapped between the two network models. By default the setting is 45 degrees. When the divider is disabled the angle is set to zero degrees.

Read-only parameters

The function's *Info* page displays useful, real-time information on the state of the protection function. It is accessed either through the device's HMI display, or through the setting tool software when it is connected to the device and its Live Edit mode is active.

Table. 5.4.5 - 67. Information displayed by the function.

Name	Range	Step	Description
I0dir> condition	• Normal • Start • Trip • Blocked	-	Displays the status of the protection function.

Name	Range	Step	Description
U0> Measuring now	• No U0 avail! • U0Calc • U3 Input • U4 Input	-	Displays which voltage channel is used by the function. If no voltage channel has been selected the function defaults to calculated residual voltage if line-to-neutral voltages have been connected to device. If no channel is set to "U0" mode and line-to-line voltages are connected, no residual voltage is available and "No U0 avail!" will be displayed.
U0> Pick-up setting	0.0...1 000 000V	0.1V	The required residual voltage on the primary side for the function to trip.
Detected U0/ I0 angle (fi)	-360.00...360.00deg	0.01deg	The angle in degrees between the monitored residual voltage and the current.
I0 Magnitude	0.000...250.000×$I0_n$	0.001×$I0_n$	The per-unit-value of the monitored residual current.
I0 Wattmetric I0xCos(fi)	-250.000...250.000×$I0_n$	0.001×$I0_n$	The wattmetric per-unit-value of the monitored residual current.
I0 Varmetric I0xSin(fi)	-250.000...250.000×$I0_n$	0.001×$I0_n$	The varmetric per-unit-value of the monitored residual current.
I0 direction now	• Undefined • Forward • Reverse	-	The detected direction of the residual current.
I0 meas/ I0 set now	-250.000...250.000×$I0_n$	0.001×$I0_n$	The ratio between the monitored residual current and the pick-up value.
U0 measurement now	0.000...500.000%$U0_n$	0.001%$U0_n$	The measured voltage in the chosen voltage channel.
Expected operating time	0.000...1800.000s	0.005s	Displays the expected operating time when a fault occurs. When IDMT mode is used, the expected operating time depends on the measured current value. If the measured current changes during a fault, the expected operating time changes accordingly.
Time remaining to trip	-1800.000...1800.000s	0.005s	When the function has detected a fault and counts down time towards a trip, this displays how much time is left before tripping occurs.

Function blocking

The blocking signal is evaluated at the start of each program cycle. The blocking signals are connected to the function's dedicated input, which can be configured in the *IO → Blocking Input Control* tab of the function.

- When the pick-up element activates and the blocking signal is not active, a START signal is generated, and the function starts or continues with the trip time countdown.
- When the pick-up element activates and the blocking signal is active, a BLOCKED signal is generated, and the function does not process the event further.
- When a START signal is already active and the blocking input signal becomes active, the START signal is reset and BLOCKED signal is generated. The release time characteristics are then processed in the same way as when the pick-up signal is reset.

The blocking signal needs to reach the device minimum of 5 ms before the set operating delay has passed in order for the blocking to activate in time.

© Arcteq Relays Ltd
IM00014

The function also offers an optional internal inrush harmonic blocking feature. If the inrush harmonic pick-up is active at the same time as the protection function pick-up element, the trip delay timer continues counting down as normal. Once the countdown reaches zero, if the pick-up element remains active and the second harmonic value has dropped, the function issues a trip.

Table. 5.4.5 - 68. Internal inrush harmonic blocking settings.

Name	Range	Step	Default	Description
Inrush harmonic blocking (internal-only trip)	• No • Yes	-	• No	Enables and disables the 2nd harmonic blocking.
2nd harmonic blocking limit (Iharm/Ifund)	0.10…50.00%I_{fund}	0.01%I_{fund}	0.01%I_{fund}	Defines the limit of the 2nd harmonic blocking.

Operating time characteristics for trip and reset

This function supports definite time delay (DT) and inverse definite minimum time delay (IDMT). For detailed information on these delay types please refer to the chapter "General properties of a protection function" and its section "Operating time characteristics".

NOTICE!
IDMT settings are not available in broadrange mode.

Table. 5.4.5 - 69. Time delay settings specific to the directional earth fault function.

Name	Range	Step	Default	Description
Delay type of broad range characteristics	• Common time • Separate time for I0Cosfi and I0Sinfi	-	Common time	If broadrange mode is selected, it is possible to set separate time delay for earth faults in grounded networks and Petersen coil compensated networks.
Definite operating time delay (Compensated)	0.000…1800.000 s	0.005 s	0.040 s	Time delays for compensated and unearthed earth faults when "Delay type of broad range characteristics" has been set to "Separate".
Definite operating time delay (Unearthed)				

Events and registers

The directional overcurrent function (abbreviated "DEF" in event block names) generates events and registers from the status changes in the events listed below. The user can select which event messages are stored in the main event buffer: ON, OFF, or both. The events triggered by the function are recorded with a time stamp.

The function's outputs can be used for direct I/O controlling and user logic programming. The function also provides a cumulative counter for the START, TRIP and BLOCKED events.

The function offers four (4) independent stages; the events are segregated for each stage operation.

Table. 5.4.5 - 70. Event messages.

Event block name	Event name
DEF1...DEF4	Start ON/OFF
DEF1...DEF4	Trip ON/OFF
DEF1...DEF4	Block ON/OFF
DEF1...DEF4	I0Cosfi Start ON/OFF
DEF1...DEF4	I0Sinfi Start ON/OFF
DEF1...DEF4	I0Cosfi Trip ON/OFF
DEF1...DEF4	I0Sinfi Trip ON/OFF

The function registers its operation into the last twelve (12) time-stamped registers; this information is available for all provided instances separately. The register of the function records the ON event process data for START, TRIP or BLOCKED. The table below presents the structure of the function's register content.

Table. 5.4.5 - 71. Register content.

Register	Description
Event	Event name
Date and time	dd.mm.yyyy hh:mm:ss.mss
I_0 pre-triggering current	Start/Trip -20ms current
I_0 fault current	Start/Trip current
Fault capacitive I_0	Start/Trip capacitive current
Fault resistive I_0	Start/Trip resistive current
Fault U_0 (%)	Start/Trip voltage (percentage of nominal)
Fault U_0 (V)	Start/Trip voltage (in Volts)
I_0 fault angle	0...360°
Trip time remaining	0 ms...1800s
Setting group in use	Setting group 1...8 active
Network GND	Unearthed, Petersen coil earthed, Earthed network
I_0 pre-fault current	Start -200ms current

© Arcteq Relays Ltd
IM00014

5.4.6 Intermittent earth fault protection (I0int>; 67NT)

The intermittent earth fault is a transient type of single-phase-to-earth fault where the actual fault phenomenon lasts for about a few hundred microseconds. The intermittent earth fault is commonly seen in Petersen coil grounded (compensated) medium voltage networks. The intermittent earth fault is commonly thought only as a cable network problem but it can also occur in overhead line networks. The key point for this type of fault appearance is the compensation of earth fault currents with a Petersen coil.

This phenomenon is becoming more frequent as more utilities networks are replacing overhead lines with cables dug into the ground. This development in distribution networks is very understandable as overhead lines are more vulnerable to possible seasonal storm damages. Also, the annual maintenance costs as well as the annual power-down time are both significantly lower with underground cable networks than with overhead line networks. However, the problem at hand is caused by the increasing amount of cabling in the network which in turn causes dramatic increases in the capacitive earth fault currents in the distribution networks. When the capacitive earth fault current increases in the network, it becomes necessary to detect the earth fault current with a Petersen coil.

Problems caused by intermittent earth fault are normally seen in compensated network substations: an earth fault can trip multiple feeders simultaneously, or an entire substation can be tripped by residual voltage back-up protection from the incomer. This is typical of old-fashioned protection relays as it is not capable of differentiating between a normal consistent earth fault and an intermittent earth fault. As the intermittent earth fault is a transient type of fault where the actual fault lasts only for a few hundred microseconds, this causes traditional directional earth fault protection devices to lose their directional sensitivity, and as a result their directional decision algorithms go haywire and the trip decisions will be completely random. Typically, when a whole substation goes dark the logs of all protection relays show how they have experienced multiple incorrect directional earth fault starts and releases, as well as an incoming feeder protection relay residual voltage trip. This is also the worst case scenario. In another typical scenario a few feeders, including the correct faulty feeder, have tripped at the same time. In this case, as in the previous, all the protection relays' logs show various incorrect directional earth fault starts and releases.

Previously, these scenarios were usually ignored and filed under 'Mysteries of the universe' because they only occured once or twice a year and because disturbance recordings were not commonly used in normal medium-voltage substations for fault verification. However, when disturbance recorders were introduced as a common feature of protection devices this phenomenon received a name and defined characteristics. One such characteristic is the occurence of high magnitude current spikes, which –compared to residual voltage– are in the opposite direction of the current spike in faulty feeders and concurrent in healthy feeders. Handling these unique characteristics requires a completely different set of tools than what traditional directional earth fault protection can offer. The following figures present three intermittent earth fault situations experienced by protection relays in a substation..

Figure. 5.4.6 - 91. An intermittent earth fault in a medium size network tuned close to resonance, as seen by a protection relay of a faulty feeder.

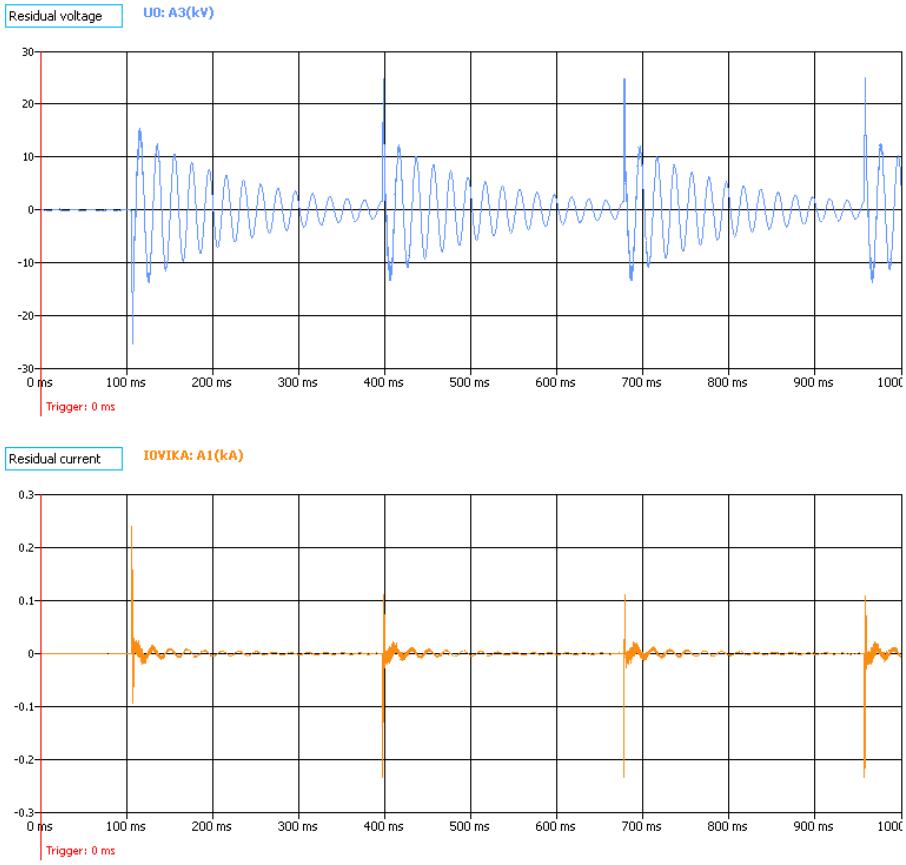

© Arcteq Relays Ltd
IM00014

Figure. 5.4.6 - 92. An intermittent earth fault in a network tuned close to resonance, as seen by a protection relay of a healthy feeder.

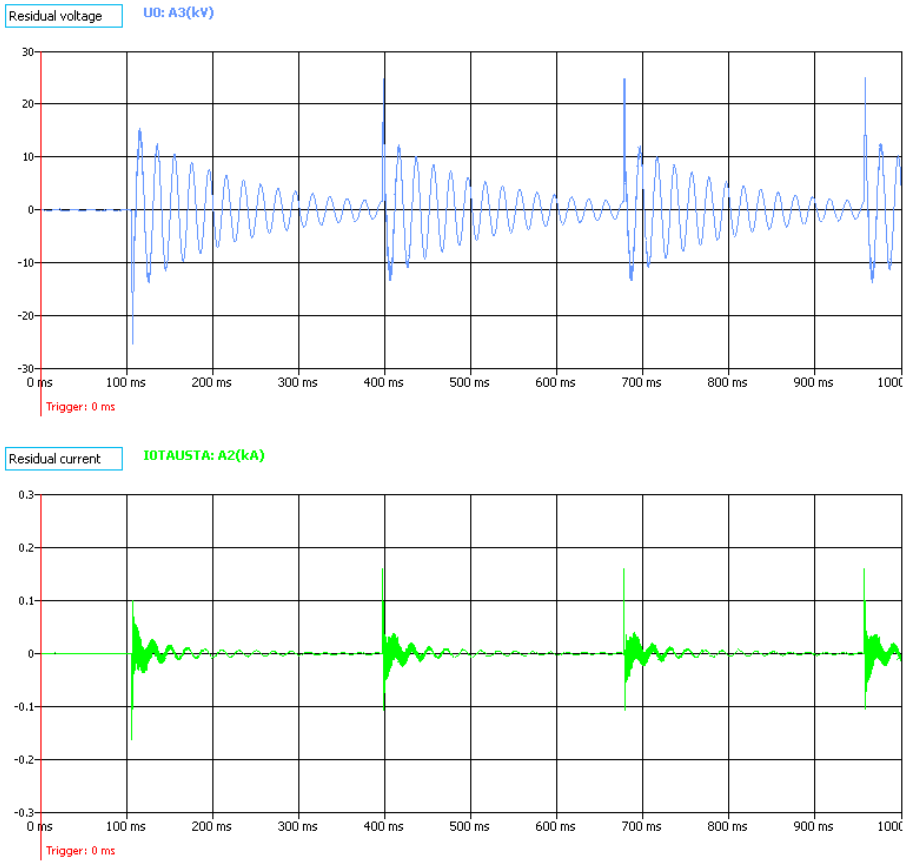

Figure. 5.4.6 - 93. An intermittent earth fault in an undercompensated medium size network, as seen by protection relay of a faulty feeder.

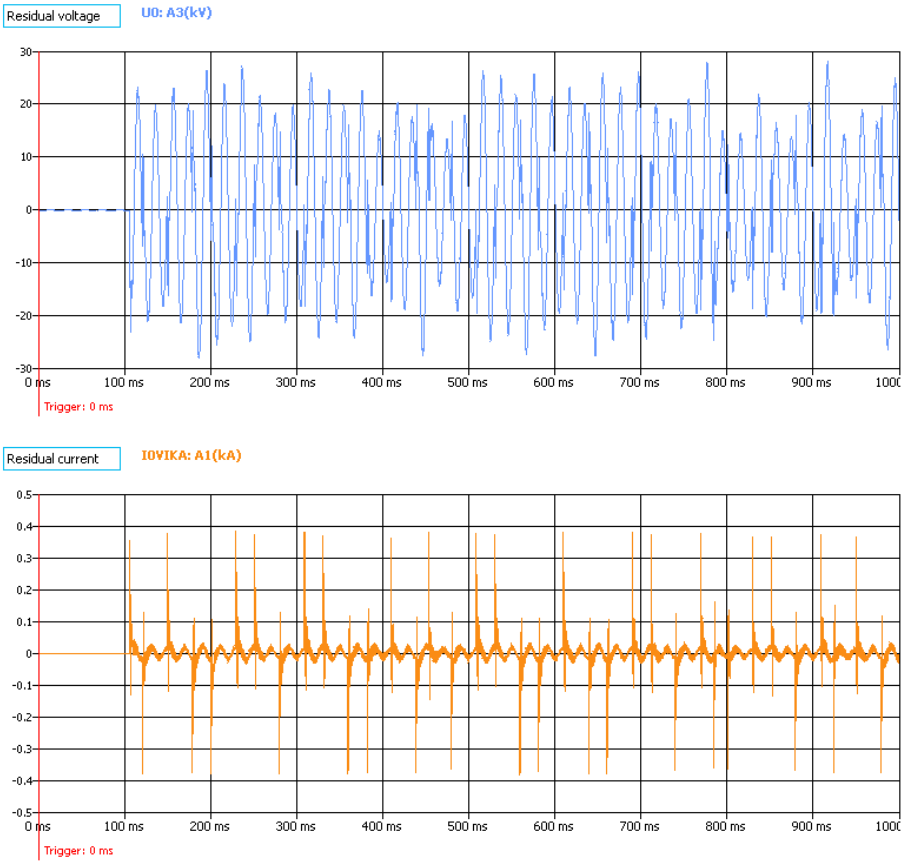

© Arcteq Relays Ltd
IM00014

Figure. 5.4.6 - 94. Undercompensated medium size network intermittent earth fault seen by a protection relay of a healthy feeder.

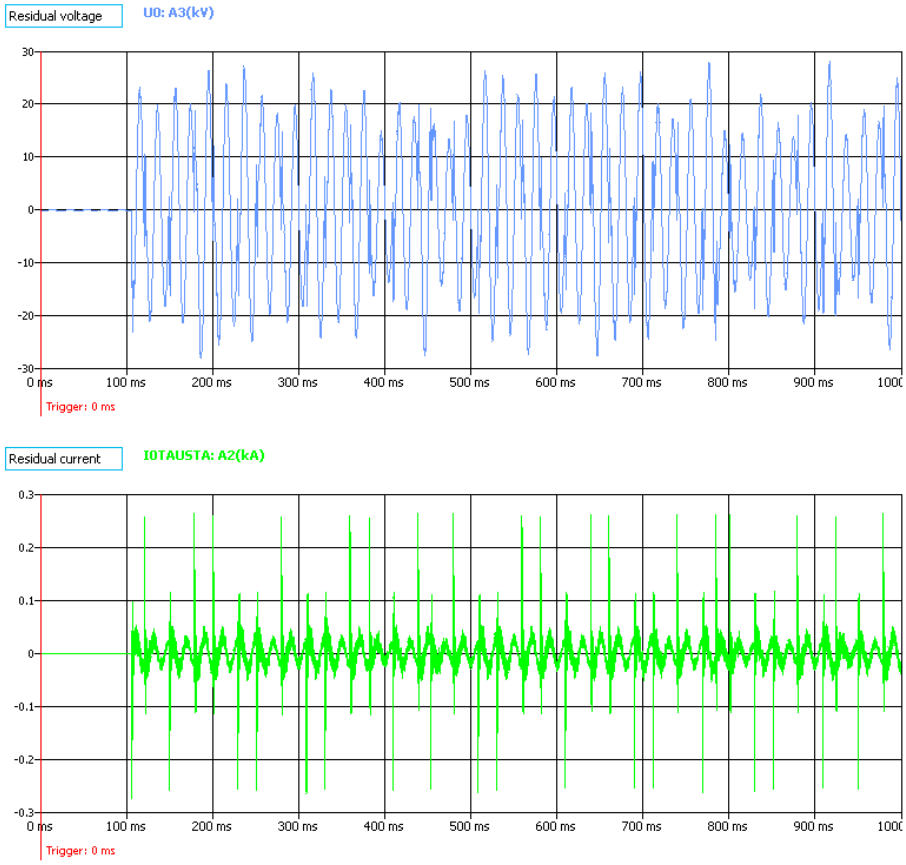

As can be seen from the figures above, the residual voltage is high both in the network tuned close to resonance and in the undercompensated network. In the case of a normal directional earth fault protection, a network tuned close to resonance would probably not even pick up on the fault, and if it did it would release before the set operating time. The residual voltage stays on for a longer period of time. Although the release would most likely come before the set tripping time, this situation could last for quite some time and put a lot of unnecessary stress on the network, possibly causing an insulator breakdown in another part of the network.

In undercompensated and overcompensated networks the residual voltage stays near the maximum level all the time, and current flashover spikes occur every power cycle. In this case, normal FFT-based directional earth fault protection algorithms lose their directional sense because an FFT-processed input signal expects the power cycle to provide long, stable data for accurate directional output. There are multiple zero crossings during a normal power cycle and therefore the FFT result may be anything from 0 to 180 degrees. When analyzing the situation from the point of view of normal directional earth fault protection, the result may be an expected trip in a faulty feeder, a false trip in a healthy feeder, or no trip whatsoever, all equally probable.

Setting principles

The intermittent earth fault protection will be coordinated with bus bar residual voltage protection. This way, during an intermittent earth fault, a faulty feeder's protection function will trip in all three previously described scenarios. Also, an intermittent earth fault protection function tripping before the residual voltage protection function results in a sufficient safety margin. However, since an intermittent earth fault causes significant network stress the protection trip should be performed as fast as possible.

The strike-through time of an intermittent earth fault in a network tuned close to resonance sets the limit for the minimum operating time for an intermittent earth fault protection stage. To ensure a correct protection operation in all cases, the reset time of an intermittent earth fault stage will be set according to the network in question, to such a level that ensures that the fault has disappeared and no new strike-throughs are expected after a prescribed reset time.

The size of the network is a dominant factor in defining the time interval of a strike-through. One can expect less frequent strike-throughs in larger (in amperes) networks. The following can be presented as a rule of a thumb: in a small or medium size network (<60 A) the strike-through interval is appr. 250...350 ms, in a large network (~100 A) it is appr. 500 ms. It is recommended that the reset time of an intermittent earth fault stage should not be set lower than 450 ms in order to obtain a network independent setting. Using this recommended value one can ensure that the function will not reset too early even in resonance tuned networks.

Usually the maximum operating time of an intermittent earth fault function is dictated by the residual voltage protection of the bus bar. If the residual voltage protection is set to very fast tripping, it may be necessary to also prolong its set value. It is recommended that the operating time of an intermittent earth fault stage should be 500 ms counting from the first strike-through. Using this recommended value the protection tripping requires a minimum of two strike-troughs even in resonance tuned networks in which strike-throughs occur less frequently. If the residual voltage protection is set to very fast tripping (<1 s), it may be necessary to verify the reset value of the residual voltage protection. The residual voltage protection operating time will never be faster than the sum of the following: the prescribed intermittent earth fault operating time, the circuit breaker operating time, and the reset time of the residual voltage protection stage.

If an intermittent earth fault protection start is used to block regular non-intermittent directional earth fault protection, the blocking should be applied to protection relays at both healthy and faulty feeders. In general, if intermittent earth fault protection is not used to block directional earth fault protection, it should be verified that the operating time of regular directional earth fault protection is longer than the set intermittent earth fault protection operating time. It is recommended to block regular directional earth fault protection to avoid start events in directional earth fault protection during intermittent earth faults (if start events are considered disturbing), or if directional non-intermittent earth fault protection is set to a faster operating time than intermittent earth fault protection.

If intermittent earth fault protection would be set for optimal operation, sensitive pick-up settings should be avoided. General setting parameter values are presented below.

Setting parameter	Value
Operating mode	Intermittent
Spike calculation mode	Absolute FWD spikes to trip
U0 Detect spike >	40 %
I0 Detect spike >	0.4 x $I0_n$
FWD reset time	0.450 s
REV reset time	0.450 s
Definite operating time delay	0.500 s
Spikes to trip >	2

The best verification for the settings is a field test with a test system capable of intermittent earth faults. One network characteristic may vary significantly from another. By following the basic rules presented in this chapter it should be easier to define the correct setting range.

© Arcteq Relays Ltd
IM00014

It is also important to check that the reset time settings are never set longer than the desired operating time delay setting.

Measured input

The function block uses residual current measurement channels and neutral voltage measurement channels. Either the I_{01} or the I_{02} channel can be selected for residual current samples. Either U_3 or U_4 voltage channel can be selected for neutral voltage samples. The selection of the used measurement channels are made with setting parameters.

Table. 5.4.6 - 72. Measurement inputs of the I0int> function.

Signal	Description
U_3 samples	U_3 neutral voltage circular buffer of samples
U_4 samples	U_4 neutral voltage circular buffer of samples
I_{01} samples	I_0 residual current circular buffer of samples
I_{02} samples	I_0 residual current circular buffer of samples

General settings

The following general settings define the general behavior of the function. These settings are static i.e. it is not possible to change them by editing the setting group.

Table. 5.4.6 - 73. General settings of the function.

Name	Range	Default	Description
I0Int> force status to	• Normal • Blocked • StartFWD • StartREV • Trip	Normal	Force the status of the function. Visible only when *Enable stage forcing* parameter is enabled in *General* menu.
Input selection	• I01 • I02	I01	Defines which measured residual current is used by the function.

Pick-up settings

The setting parameters *U0 Detect spike>* and *I0 Detect spike>* control the pick-up of the I0int> function. They define the maximum allowed measured residual current and voltage before action from the function. The function constantly calculates the ratio between the setting and the maximum value of the circular buffer.

Table. 5.4.6 - 74. Pick-up settings.

Name	Range	Step	Default	Description
U0 Detect spike >	1.00…100.00%U_n	0.01%U_n	30.00%U_n	Pick-up setting U_0
I0 Detect spike >	0.05…40.00x$I0_n$	0.01x$I0_n$	0.30x$I0_n$	Pick-up setting I_0

The START signal is allowed if the blocking condition is not active and if the threshold of the admittance delta calculated by the input signal exceeds these settings:

- I0 Detect spike > = set admittance delta threshold
- U0 Detect spike > = set admittance delta threshold.

Read-only parameters

The function's *Info* page displays useful, real-time information on the state of the protection function. It is accessed either through the device's HMI display, or through the setting tool software when it is connected to the device and its Live Edit mode is active.

Table. 5.4.6 - 75. Information displayed by the function.

Name	Range	Step	Description
I0Int> condition	• Normal • StartFWD • StartREV • Trip • Blocked	-	Displays status of the protection function.
U0> measuring now	• No U0 avail! • U3 Input • U4 Input	-	Displays which voltage channel is used by the function. If no voltage channel has been selected the function defaults to "No U0 avail!".
Expected operating time	0.000...1800.000s	0.005s	Displays the expected operating time when a fault occurs.
Time remaining to trip	0.000...1800.000s	0.005s	When the function has detected a fault and counts down time towards a trip, this displays how much time is left before tripping occurs.
Spikes remaining to trip >	0...4294967295	1	Displays how many spikes need to be detected before tripping can occur.

Function blocking

The blocking signal is evaluated at the start of each program cycle. The blocking signals are connected to the function's dedicated input, which can be configured in the *IO → Blocking Input Control* tab of the function.

- When the pick-up element activates and the blocking signal is not active, a START signal is generated, and the function starts or continues with the trip time countdown.
- When the pick-up element activates and the blocking signal is active, a BLOCKED signal is generated, and the function does not process the event further.
- When a START signal is already active and the blocking input signal becomes active, the START signal is reset and BLOCKED signal is generated. The release time characteristics are then processed in the same way as when the pick-up signal is reset.

The blocking signal needs to reach the device minimum of 5 ms before the set operating delay has passed in order for the blocking to activate in time.

© Arcteq Relays Ltd
IM00014

Operating time characteristics for trip and reset

The operating timers' behavior during a function can be set for trip signal and for the release of the function in case the pick-up element is reset before the trip time has been reached. A definite time (DT) operation gives the trip signal after a user-defined time delay regardless of the measured current as long as the pick-up element is active. The following table presents the setting parameters for the function time characteristics.

Table. 5.4.6 - 76. Operating time characteristics setting parameters.

Name	Range	Step	Default	Description
FWD reset time	0.000…1800.000s	0.005s	0.500s	Forward start detection reset time. Starts to count from the first detected forward (faulty feeder) spike. If while counting another spike is detected, the timer resets and starts from the beginning. If the timer runs to the end, it resets the function's STARTFWD signal.
REV reset time	0.000…1800.000s	0.005s	0.500s	Reverse start detection reset time. Starts to count from the first detected reverse (healthy feeder) spike. If while counting another spike is detected, the timer resets and starts from the beginning. If the timer runs to the end, it resets the function's STARTREV signal. This parameter is visible when operating mode is set to "Intermittent".
Definite operating time delay	0.000…1800.000s	0.005s	0.700s	Operating time counter that starts from the beginning of the fault if the FWD reset time is running and the function has a START signal on. If the FWD reset time is reached and the function releases, this timer is reset as well. This parameter is visible when operating mode is set to "Intermittent".
Spikes to trip >	1...50	1	2	The calculated cumulative spikes comparator. In order for the function to trip, a set number of spikes must be exceeded. If the set operating time is reached but the calculated spike number is below this, the setting function releases without a trip when the FWD reset time has elapsed. This parameter is visible when operating mode is set to "Intermittent".

Events and registers

The intermittent earth fault function (abbreviated "IEF" in event block names) generates events and registers from the status changes in the events listed below. The user can select which event messages are stored in the main event buffer: ON, OFF, or both. The events triggered by the function are recorded with a time stamp.

The function's outputs can be used for direct I/O controlling and user logic programming. The function also provides a cumulative counter for the START, TRIP and BLOCKED events.

Table. 5.4.6 - 77. Event messages.

Event block name	Event names
IEF1	Start FWD ON/OFF
IEF1	Start REV ON/OFF

Event block name	Event names
IEF1	Trip ON/OFF
IEF1	Block ON/OFF
IEF1	Intermittent EF detected ON/OFF
IEF1	Normal earthfault detected
IEF1	Intermittent EF Locked

The function registers its operation into the last twelve (12) time-stamped registers. The register of the function records the ON event process data for START, TRIP or BLOCKED. The table below presents the structure of the function's register content.

Table. 5.4.6 - 78. Register content.

Name	Description
Date and time	dd.mm.yyyy hh:mm:ss.mss
Event	Event name
Trip time remaining	Time remaining from the set operating time.
Started FWD	YES/NO indication of the forward start in this fault.
Spikes FWD	The calculated cumulative amount of forward (faulty) feeder spikes.
Started REV	YES/NO indication of the reverse start in this fault.
Spikes REV	The calculated cumulative amount of reverse (healthy) feeder spikes
Spikes to trip	Set spikes to trip subtracted by the cumulative forward spikes. If 0 spikes, it trips.
Operating mode	Intermittent / Transient
Setting group in use	1...8

5.4.7 Negative sequence overcurrent/ phase current reversal/ current unbalance protection (I2>; 46/46R/46L)

The current unbalance function is used for instant and time-delayed unbalanced network protection and for detecting broken conductors. The number of stages in the function depends on the device model. The operating decisions are based on negative and positive sequence current magnitudes which the function constantly measures. In the broken conductor mode (I2/I1) the minimum allowed loading current is also monitored in the phase current magnitudes.

There are two possible operating modes available: the I2 mode monitors the negative sequence current, while the I2/I1 mode monitors the ratio between the negative sequence current and the positive sequence current. The device calculates the symmetrical component magnitudes in use from the phase current inputs I_{L1}, I_{L2} and I_{L3}. The zero sequence current is also recorded into the registers as well as the angles of the positive, negative and zero sequence currents in order to better verify any fault cases.

© Arcteq Relays Ltd
IM00014

Figure. 5.4.7 - 95. Simplified function block diagram of the I2> function.

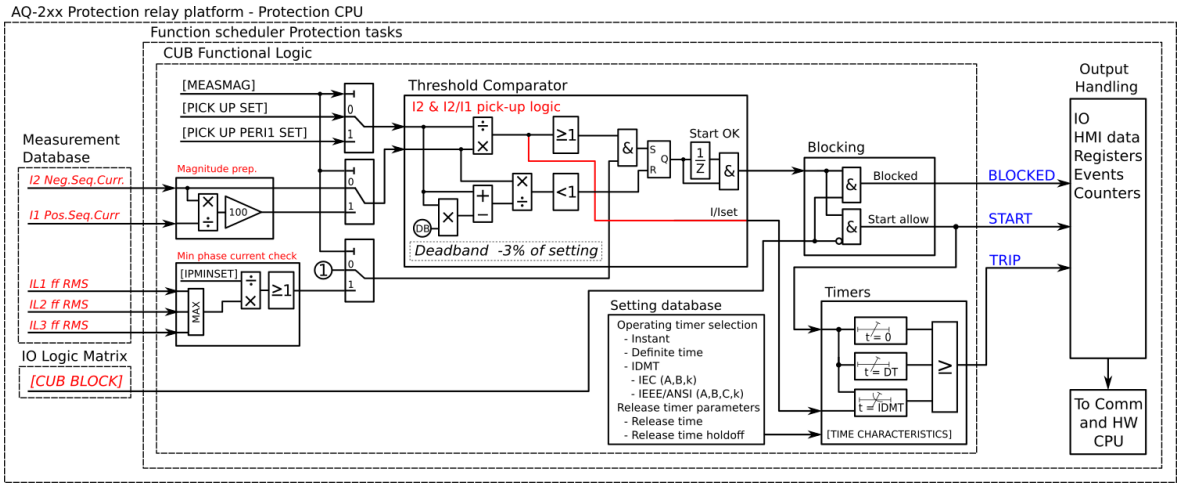

Measured input

The function block uses positive and negative sequence currents calculated from the phase current measurement channels. In the broken conductor mode (I2/I1) the function also uses fundamental frequency component of all phase currents to check the minimum current. Zero sequence and component sequence angles are used for fault registering and for fault analysis processing.

Table. 5.4.7 - 79. Measurement inputs of the I2> function.

Signal	Description
I1	Positive sequence current magnitude
I2	Negative sequence current magnitude
IZ	Zero sequence current magnitude
I1 ANG	Positive sequence current angle
I2 ANG	Negative sequence current angle
IZ ANG	Zero sequence current angle
I_{L1}RMS	Fundamental frequency component of phase L1 (A) current measurement
I_{L2}RMS	Fundamental frequency component of phase L2 (B) current measurement
I_{L3}RMS	Fundamental frequency component of phase L3 (C) current measurement

General settings

The following general settings define the general behavior of the function. These settings are static i.e. it is not possible to change them by editing the setting group.

Table. 5.4.7 - 80. General settings of the function.

Name	Range	Default	Description
I2> force status to	• Normal • Start • Trip • Blocked	Normal	Force the status of the function. Visible only when *Enable stage forcing* parameter is enabled in *General* menu.
Measured magnitude	• I2pu • I2/I1	I2pu	Defines whether the ratio between the positive and the negative sequence currents are supervised or whether only the negative sequence is used in detecting unbalance.

Pick-up settings

The setting parameters $I2_{set}$ *and* $I2/I1_{set}$ control the the pick-up of the I2> function. They define the maximum allowed measured negative sequence current or the negative/positive sequence current ratio before action from the function. The function constantly calculates the ratio between the I_{set} and the measured magnitude (I_m). The reset ratio of 97 % is built into the function and is always relative to the I_{xset} value. The reset ratio is the same for both modes.

Setting group selection controls the operating characteristics of the function, i.e. the user or user-defined logic can change function parameters while the function is running.

Table. 5.4.7 - 81. Pick-up settings.

Name	Range	Step	Default	Description
I2set	0.01…40.00×I_n	0.01×I_n	0.2×I_n	Pick-up setting for I2 mode
I2/I1set	1…200%	0.01%	20%	Pick-up setting for I2/I1 mode

Read-only parameters

The function's *Info* page displays useful, real-time information on the state of the protection function. It is accessed either through the device's HMI display, or through the setting tool software when it is connected to the device and its Live Edit mode is active.

Table. 5.4.7 - 82. Information displayed by the function.

Name	Range	Description
I2> condition	Normal Start Trip Blocked	Displays the status of the protection function.
I2> I2I1 relation	0.00...100 000.00	Ratio between the negative sequence current and positive sequence current.
I2 meas / I2 set	0.00...100 000.00	Ratio between measured negative sequence current and the pick-up value.
Expected operating time	0.000...1800.000s	Displays the expected operating time when a fault occurs. When IDMT mode is used, the expected operating time depends on the measured highest phase current value. If the measured current changes during a fault, the expected operating time changes accordingly.

© Arcteq Relays Ltd
IM00014

Name	Range	Description
Time remaining to trip	-1800.000...1800.000s	When the function has detected a fault and counts down time towards a trip, this displays how much time is left before tripping occurs.

Function blocking

The blocking signal is evaluated at the start of each program cycle. The blocking signals are connected to the function's dedicated input, which can be configured in the *IO → Blocking Input Control* tab of the function.

- When the pick-up element activates and the blocking signal is not active, a START signal is generated, and the function starts or continues with the trip time countdown.
- When the pick-up element activates and the blocking signal is active, a BLOCKED signal is generated, and the function does not process the event further.
- When a START signal is already active and the blocking input signal becomes active, the START signal is reset and BLOCKED signal is generated. The release time characteristics are then processed in the same way as when the pick-up signal is reset.

The blocking signal needs to reach the device minimum of 5 ms before the set operating delay has passed in order for the blocking to activate in time.

Operating time characteristics for trip and reset

The operating timers' behavior during a function can be set for TRIP signal and also for the release of the function in case the pick-up element is reset before the trip time has been reached. There are three basic operating modes available for the function:

- Instant operation: gives the TRIP signal with no additional time delay simultaneously with the start signal.
- Definite time operation (DT): gives the TRIP signal after a user-defined time delay regardless of the measured current as long as the current is above or below the i_{set} value and thus the pick-up element is active (independent time characteristics).
- Inverse definite minimum time (IDMT): gives the TRIP signal after a time which is in relation to the set pick-up value I_{set} and the measured current I_m (dependent time characteristics).

Both IEC and IEEE/ANSI standard characteristics as well as user settable parameters are available for the IDMT operation.

Unique to the current unbalance protection is the availability of the "Curve2" delay which follows the formula below:

$$t = \frac{k}{{I_{2meas}}^2 - {I_{set}}^2}$$

- t = Operating time
- I_{2meas} = Calculated negative sequence
- k = Constant k value (user settable delay multiplier)
- I_{set}= Pick-up setting of the function

Figure. 5.4.7 - 96. Operation characteristics curve for I2> Curve2.

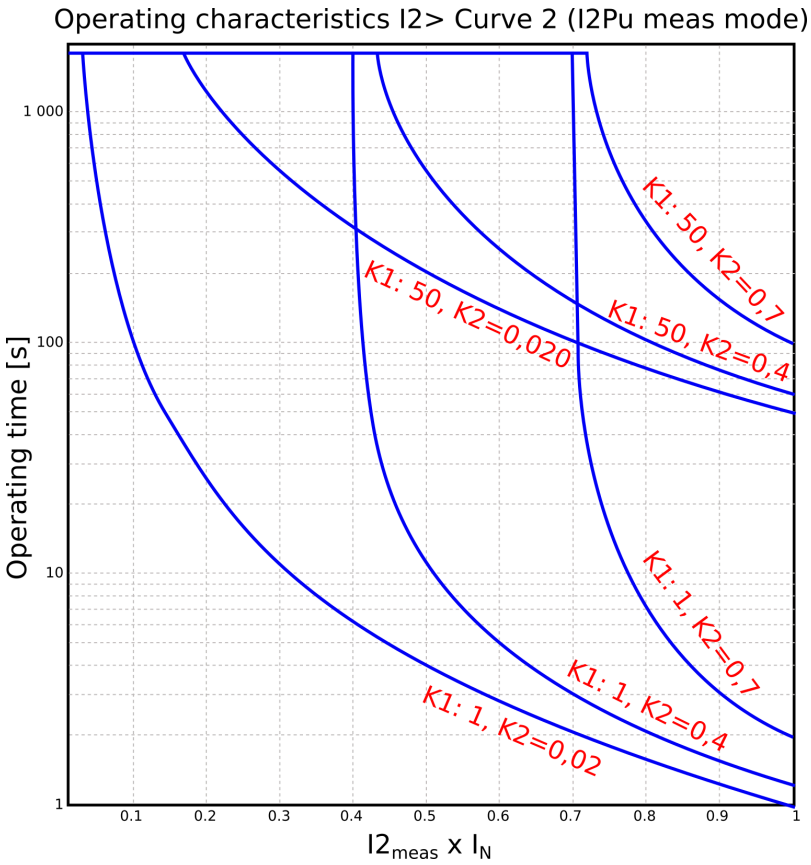

For a more detailed description on the time characteristics and their setting parameters, please refer to the "General properties of a protection function" chapter and its "Operating time characteristics" section.

Events and registers

The current unbalance function (abbreviated "CUB" in event block names) generates events and registers from the status changes in the events listed below. The user can select which event messages are stored in the main event buffer: ON, OFF, or both. The events triggered by the function are recorded with a time stamp.

The function's outputs can be used for direct I/O controlling and user logic programming. The function also provides a resettable cumulative counter for the START, TRIP and BLOCKED events.

The function offers four (4) independent stages; the events are segregated for each stage operation.

Table. 5.4.7 - 83. Event messages.

Event block name	Event names
CUB1...CUB4	Start ON/OFF
CUB1...CUB4	Trip ON/OFF
CUB1...CUB4	Block ON/OFF

The function registers its operation into the last twelve (12) time-stamped registers. The register of the function records the ON event process data for START, TRIP or BLOCKED. The table below presents the structure of the function's register content.

© Arcteq Relays Ltd
IM00014

Table. 5.4.7 - 84. Register content.

Register	Description
Event	Event name
Date and time	dd.mm.yyyy hh:mm:ss.mss
Pre-trigger current	Start/Trip -20ms current
Fault current	Start/Trip current
Pre-fault current	Start -200ms current
Fault currents	I1, I2, IZ mag. and ang.
Trip time remaining	0 ms...1800s
Setting group in use	Setting group 1...8 active

5.4.8 Harmonic overcurrent protection (Ih>; 50H/51H/68H)

The harmonic overcurrent function is used for non-directional instant and time-delayed overcurrent detection and clearing. The number of stages in the function depends on the device model. The function constantly measures the selected harmonic component of the selected measurement channels, the value being either absolute value or relative to the RMS value.

Figure. 5.4.8 - 97. Simplified function block diagram of the Ih> function.

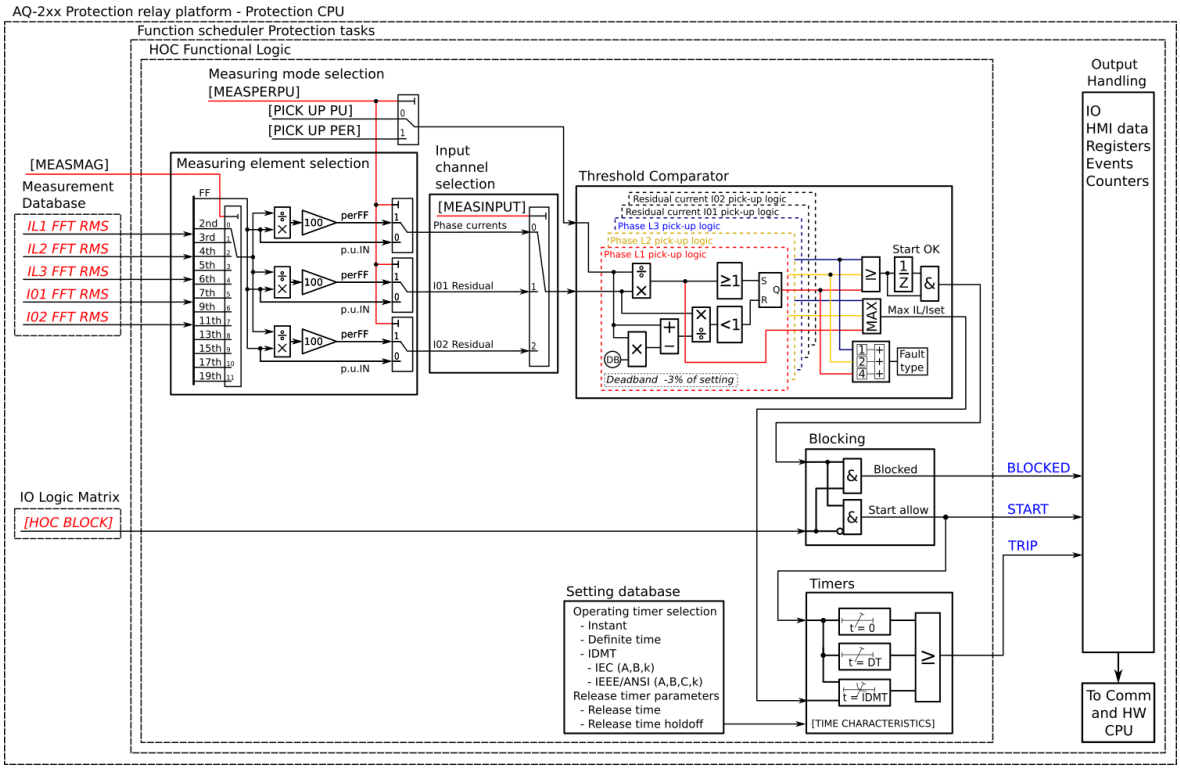

Measured input

The function block uses analog current measurement values from phase or residual currents. Each measurement input of the function block uses RMS (fundamental frequency component) values and harmonic components of the selected current input. The user can select the monitored magnitude to be equal to the per-unit RMS values of the harmonic component, or to the harmonic component percentage content compared to the RMS values.

Table. 5.4.8 - 85. Measurement inputs of the Ih> function.

Signal	Description
I_{L1}FFT	The magnitudes (RMS) of phase L1 (A) current components: - Fundamental - 2nd harmonic - 3rd harmonic - 4th harmonic - 5th harmonic - 6th harmonic - 7th harmonic - 9th harmonic - 11th harmonic - 13th harmonic - 15th harmonic - 17th harmonic - 19th harmonic.
I_{L2}FFT	The magnitudes (RMS) of phase L2 (B) current components: - Fundamental - 2nd harmonic - 3rd harmonic - 4th harmonic - 5th harmonic - 6th harmonic - 7th harmonic - 9th harmonic - 11th harmonic - 13th harmonic - 15th harmonic - 17th harmonic - 19th harmonic.

© Arcteq Relays Ltd
IM00014

Signal	Description
I_{L3}FFT	The magnitudes (RMS) of phase L3 (C) current components: - Fundamental - 2nd harmonic - 3rd harmonic - 4th harmonic - 5th harmonic - 6th harmonic - 7th harmonic - 9th harmonic - 11th harmonic - 13th harmonic - 15th harmonic - 17th harmonic - 19th harmonic.
I_{01}FFT	The magnitudes (RMS) of residual $I0_1$ current components: - Fundamental - 2nd harmonic - 3rd harmonic - 4th harmonic - 5th harmonic - 6th harmonic - 7th harmonic - 9th harmonic - 11th harmonic - 13th harmonic - 15th harmonic - 17th harmonic - 19th harmonic.
I_{02}FFT	The magnitudes (RMS) of residual $I0_2$ current components: - Fundamental - 2nd harmonic - 3rd harmonic - 4th harmonic - 5th harmonic - 6th harmonic - 7th harmonic - 9th harmonic - 11th harmonic - 13th harmonic - 15th harmonic - 17th harmonic - 19th harmonic.

General settings

The function can be set to monitor the ratio between the measured harmonic and either the measured fundamental component or the per unit value of the harmonic current. The user must select the correct measurement input.

Table. 5.4.8 - 86. Operating mode selection settings.

Name	Range	Default	Description
Ih> force status to	• Normal • Start • Trip • Blocked	Normal	Force the status of the function. Visible only when *Enable stage forcing* parameter is enabled in *General* menu.
Harmonic selection	• 2nd harmonic • 3rd harmonic • 4th harmonic • 5th harmonic • 6th harmonic • 7th harmonic • 9th harmonic • 11th harmonic • 13th harmonic • 15th harmonic • 17th harmonic • 19th harmonic	2nd harmonic	Selection of the monitored harmonic component.
Per unit or relative	• × I_n • Ih/IL	× I_n	Selection of the monitored harmonic mode. Either directly per unit x I_n or in relation to the fundamental frequency magnitude.
Measurement input	• IL1/IL2/IL3 • I01 • I02	IL1/IL2/IL3	Selection of the measurement input (either phase current or residual current).

Pick-up settings

The setting parameter Ih_{set} per unit or *Ih/IL* (depending on the selected operating mode) controls the pick-up of the Ih> function. This defines the maximum allowed measured current before action from the function. The function constantly calculates the ratio between the Ih_{set} per unitor *Ih/IL* and the measured magnitude (I_m) for each of the three phases. The reset ratio of 97 % is built into the function and is always relative to the Ih_{set} per unit or *Ih/IL*value. The setting value is common for all measured phases, and when the I_m exceeds the I_{set} value (in single, dual or all phases) it triggers the pick-up operation of the function.

Setting group selection controls the operating characteristics of the function, i.e. the user or user-defined logic can change function parameters while the function is running.

© Arcteq Relays Ltd
IM00014

Table. 5.4.8 - 87. Pick-up settings.

Name	Range	Step	Default	Description
Ih_{set} pu	0.05…2.00×I_n	0.01×I_n	0.20×I_n	Pick-up setting (per unit monitoring)
Ih/IL	5.00…200.00%	0.01%	20.00%	Pick-up setting (percentage monitoring)

Read-only parameters

The function's *Info* page displays useful, real-time information on the state of the protection function. It is accessed either through the device's HMI display, or through the setting tool software when it is connected to the device and its Live Edit mode is active.

Table. 5.4.8 - 88. Information displayed by the function.

Name	Range	Step	Description
Ih> condition	• Normal • Start • Trip • Blocked	-	Displays the status of the protection function.
Ih meas/ Ih set now	0.00...100000.00I_m/I_{set}	0.01I_m/I_{set}	The ratio between the monitored residual current and the pick-up value.
Expected operating time	0.000...1800.000s	0.005s	Displays the expected operating time when a fault occurs. When IDMT mode is used, the expected operating time depends on the measured voltage value. If the measured voltage changes during a fault, the expected operating time changes accordingly.
Time remaining to trip	-1800.000...1800.000s	0.005s	When the function has detected a fault and counts down time towards a trip, this displays how much time is left before tripping occurs.

Function blocking

The blocking signal is evaluated at the start of each program cycle. The blocking signals are connected to the function's dedicated input, which can be configured in the *IO → Blocking Input Control* tab of the function.

- When the pick-up element activates and the blocking signal is not active, a START signal is generated, and the function starts or continues with the trip time countdown.
- When the pick-up element activates and the blocking signal is active, a BLOCKED signal is generated, and the function does not process the event further.
- When a START signal is already active and the blocking input signal becomes active, the START signal is reset and BLOCKED signal is generated. The release time characteristics are then processed in the same way as when the pick-up signal is reset.

The blocking signal needs to reach the device minimum of 5 ms before the set operating delay has passed in order for the blocking to activate in time.

Operating time characteristics for trip and reset

This function supports definite time delay (DT) and inverse definite minimum time delay (IDMT). For detailed information on these delay types please refer to the chapter "General properties of a protection function" and its section "Operating time characteristics".

Events and registers

The harmonic overcurrent function (abbreviated "HOC" in event block names) generates events and registers from the status changes in the events listed below. The user can select which event messages are stored in the main event buffer: ON, OFF, or both. The events triggered by the function are recorded with a time stamp.

The function's outputs can be used for direct I/O controlling and user logic programming. The START signal can be used to block other stages; if the situation lasts longer, the TRIP signal can be used on other actions as time-delayed. The function also provides a resettable cumulative counter for the START, TRIP and BLOCKED events.

The function offers four (4) independent stages; the events are segregated for each stage operation.

Table. 5.4.8 - 89. Event description.

Event block name	Event names
HOC1...HOC4	Start ON/OFF
HOC1...HOC4	Trip ON/OFF
HOC1...HOC4	Block ON/OFF

The function registers its operation into the last twelve (12) time-stamped registers. The register of the function records the ON event process data for START, TRIP or BLOCKED. The table below presents the structure of the function's register content.

Table. 5.4.8 - 90. Register content.

Register	Description
Date and time	dd.mm.yyyy hh:mm:ss.mss
Event	Event name
Fault type	L1-G…L1-L2-L3
Pre-trigger current	Start/Trip -20ms current
Fault current	Start/Trip current
Pre-fault current	Start -200ms current
Trip time remaining	0 ms...1800s
Setting group in use	Setting group 1...8 active

© Arcteq Relays Ltd
IM00014

5.4.9 Circuit breaker failure protection (CBFP; 50BF/52BF)

The circuit breaker failure protection function is used for monitoring the circuit breaker operation after it has received a TRIP signal. The function can also be used to retrip a failing breaker; if the retrip fails, an incoming feeder circuit breaker can be tripped by using the function's CBFP output. The retrip functionality can be disabled if the breaker does not have two trip coils.

The function can be triggered by the following:

- overcurrent (phase and residual)
- digital output monitor
- digital signal
- any combination of the above-mentioned triggers.

In the current-dependent mode the function constantly measures phase current magnitudes and the selected residual current. In the signal-dependent mode any of the device's binary signals (trips, starts, logical signals etc.) can be used to trigger the function. In the digital output-dependent mode the function monitors the status of the selected output relay control signal.

Figure. 5.4.9 - 98. Simplified function block diagram of the CBFP function.

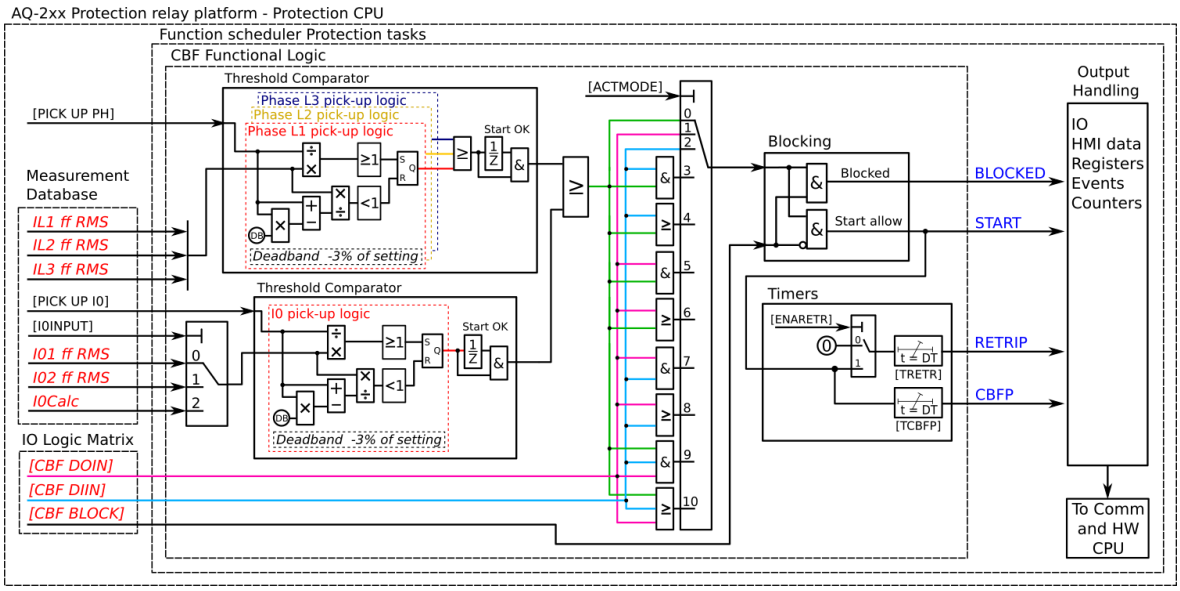

Measured input

The function block uses fundamental frequency component of phase current and residual current measurement values. The user can select I01, I02 or the calculated I0 for the residual current measurement.

Table. 5.4.9 - 91. Measurement inputs of the CBFP function.

Signal	Description
I_{L1}RMS	Fundamental frequency component of phase L1 (A) current measurement
I_{L2}RMS	Fundamental frequency component of phase L2 (B) current measurement
I_{L3}RMS	Fundamental frequency component of phase L3 (C) current measurement
I_{01}RMS	Fundamental frequency component of residual input I_{01} measurement

Signal	Description
I_{02}RMS	Fundamental frequency component of residual input I_{02} measurement
I_{0Calc}	Calculated residual current from the phase current inputs

General settings

The following general settings define the general behavior of the function. These settings are static i.e. it is not possible to change them by editing the setting group.

Table. 5.4.9 - 92. CBFP monitoring signal definitions.

Name	Description
Signal in monitor	Defines which TRIP events of the used protection functions trigger the CBFP countdown. For the CBFP function to monitor the signals selected here, the "Operation mode selection" parameter must be set to a mode that includes signals (e.g. "Signals only", "Signals or DO", "Current and signals and DO").
Trip monitor	Defines which output relay of the used protection functions trigger the CBFP countdown. For the CBFP function to monitor the output relays selected here, the "Operation mode selection" parameter must be set to a mode that includes digital outputs (e.g. "DO only", "Current and DO", "Current or signals or DO").

Table. 5.4.9 - 93. General settings of the function.

Name	Range	Default	Description
CBFP force status to	• Normal • Start • ReTrip • CBFP • Blocked	Normal	Force the status of the function. Visible only when *Enable stage forcing* parameter is enabled in *General* menu.

Pick-up settings

The setting parameters I_{set} and $I0_{set}$ control the pick-up and the activation of the current-dependent CBFP function. They define the minimum allowed measured current before action from the function. The function constantly calculates the ratio between the I_{set} or the $I0_{set}$ and the measured magnitude (I_m) for each of the three phases and the selected residual current input. The reset ratio of 97 % is built into the function and is always relative to the I_{set} value. The setting value is common for all measured phases. When the I_m exceeds the I_{set} value (in single, dual or all phases) it triggers the pick-up operation of the function.

Setting group selection controls the operating characteristics of the function, i.e. the user or user-defined logic can change function parameters while the function is running.

© Arcteq Relays Ltd
IM00014

Table. 5.4.9 - 94. Operating mode and input signals selection.

Name	Range	Step	Default	Description
I0Input	• Not in use • I01 • I02 • I0Calc	-	Not in use	Selects the residual current monitoring source, which can be either from the two separate residual measurements (I01 and I02) or from the phase current's calculated residual current.
Actmode	• Current only • DO only • Signals only • Current and DO • Current or DO • Current and signals • Current or signals • Signals and DO • Signals or DO • Current or DO or signals • Current and DO and Signals	-	Current only	Selects the operating mode. The mode can be dependent on current measurement, binary signal status, output relay status ("DO"), or a combination of the three.

Table. 5.4.9 - 95. Pick-up settings.

Name	Range	Step	Default	Description
I_{set}	0.01…40.00×I_n	0.01×I_n	0.20×I_n	The pick-up threshold for the phase current measurement. This setting limit defines the upper limit for the phase current pick-up element.
$I0_{set}$	0.005...40.000×I_n	0.001×I_n	1.200×I_n	The pick-up threshold for the residual current measurement. This setting limit defines the upper limit for the phase current pick-up element.

Read-only parameters

The function's *Info* page displays useful, real-time information on the state of the protection function. It is accessed either through the device's HMI display, or through the setting tool software when it is connected to the device and its Live Edit mode is active.

Table. 5.4.9 - 96. Information displayed by the function.

Name	Range	Description
CBFP condition	• Normal • Start • ReTrip • CBFP On • Blocked	Displays status of the protection function.

Function blocking

The block signal is checked in the beginning of each program cycle. The blocking signal is received from the blocking matrix in the function's dedicated input. If the blocking signal is not activated when the pick-up element activates, a START signal is generated and the function proceeds to the time characteristics calculation.

If the blocking signal is active when the pick-up element activates, a BLOCKED signal is generated and the function does not process the situation further. If the START function has been activated before the blocking signal, it resets and processes the release time characteristics similarly to when the pick-up signal is reset.

The variables the user can set are binary signals from the system. The blocking signal needs to reach the device minimum of 5 ms before the set operating delay has passed in order for the blocking to activate in time.

Operating time characteristics

The operating timers' behavior during a function can be set depending on the application. The same pick-up signal starts both timers. When retrip is used the time grading should be set as follows: the sum of specific times (i.e. the retrip time, the expected operating time, and the pick-up conditions' release time) is shorter the set CBFP time. This way, when retripping another breaker coil clears the fault, any unnecessary function triggers are avoided.

The following table presents the setting parameters for the function's operating time characteristics.

Table. 5.4.9 - 97. Setting parameters for operating time characteristics.

Name	Range	Step	Default	Description
Retrip	• No • Yes	-	Yes	Retrip enabled or disabled. When the retrip is disabled, the output will not be visible and the TRetr setting parameter will not be available.
Retrip time delay	0.000…1800.000s	0.005s	0.100s	Retrip start the timer. This setting defines how long the starting condition has to last before a RETRIP signal is activated.
CBFP	0.000…1800.000s	0.005s	0.200s	CBFP starts the timer. This setting defines how long the starting condition has to last before the CBFP signal is activated.

The following figures present some typical cases of the CBFP function.

© Arcteq Relays Ltd
IM00014

Trip, Retrip and CBFP in the device configuration

Figure. 5.4.9 - 99. Wiring diagram when Trip, Retrip and CBFP are configured to the device.

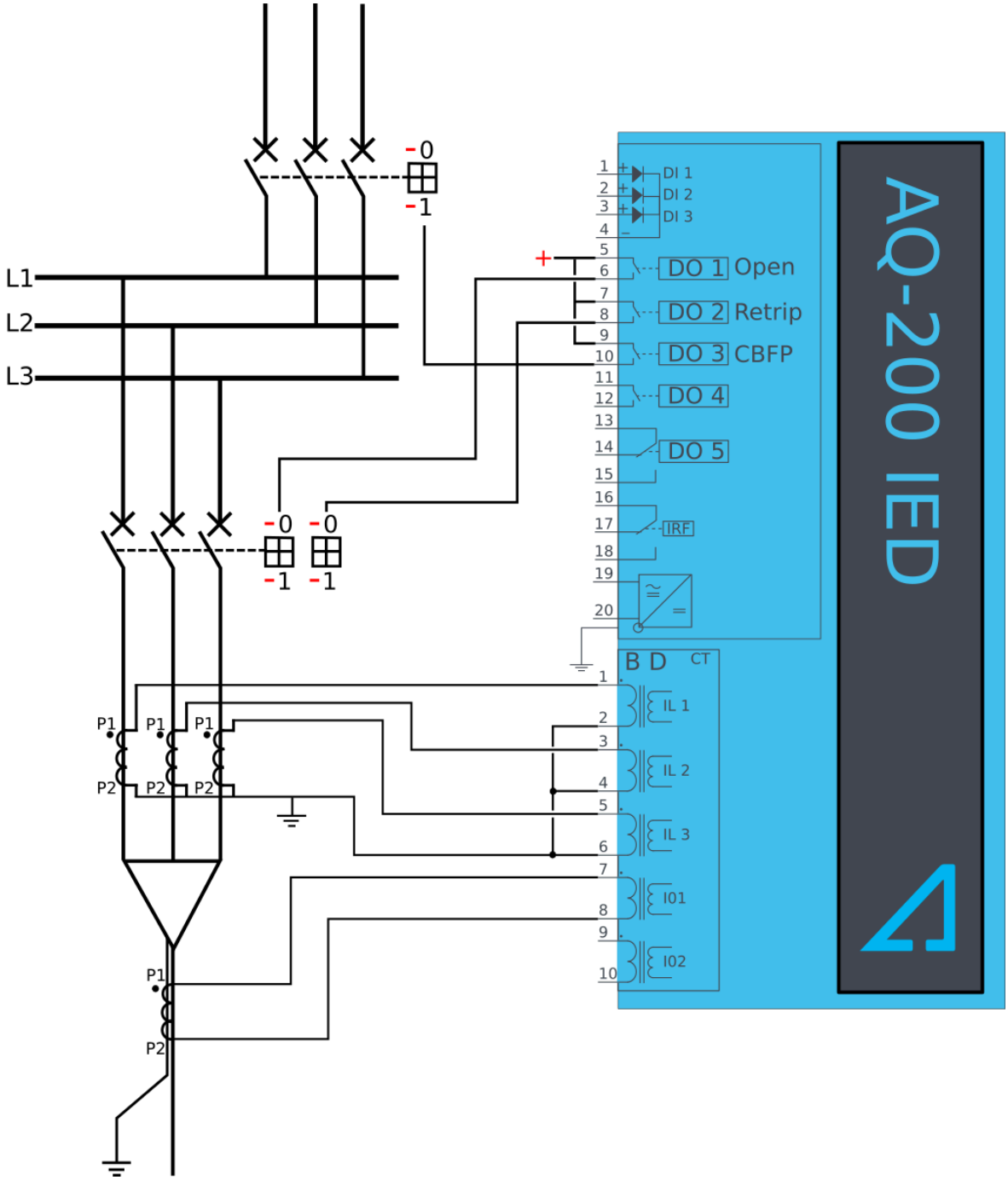

The retrip functionality can be used in applications whose circuit breaker has a retrip or a redundant trip coil available. The TRIP signal is normally wired to the breaker's trip coil from the device's trip output. The retrip is wired from its own device output contact in parallel with the circuit breaker's redundant trip coil. The CBFP signal is normally wired from its device output contact to the incoming feeder circuit breaker. Below are a few operational cases regarding the various applications.

Figure. 5.4.9 - 100. Retrip and CBFP when "Current" is the selected criterion.

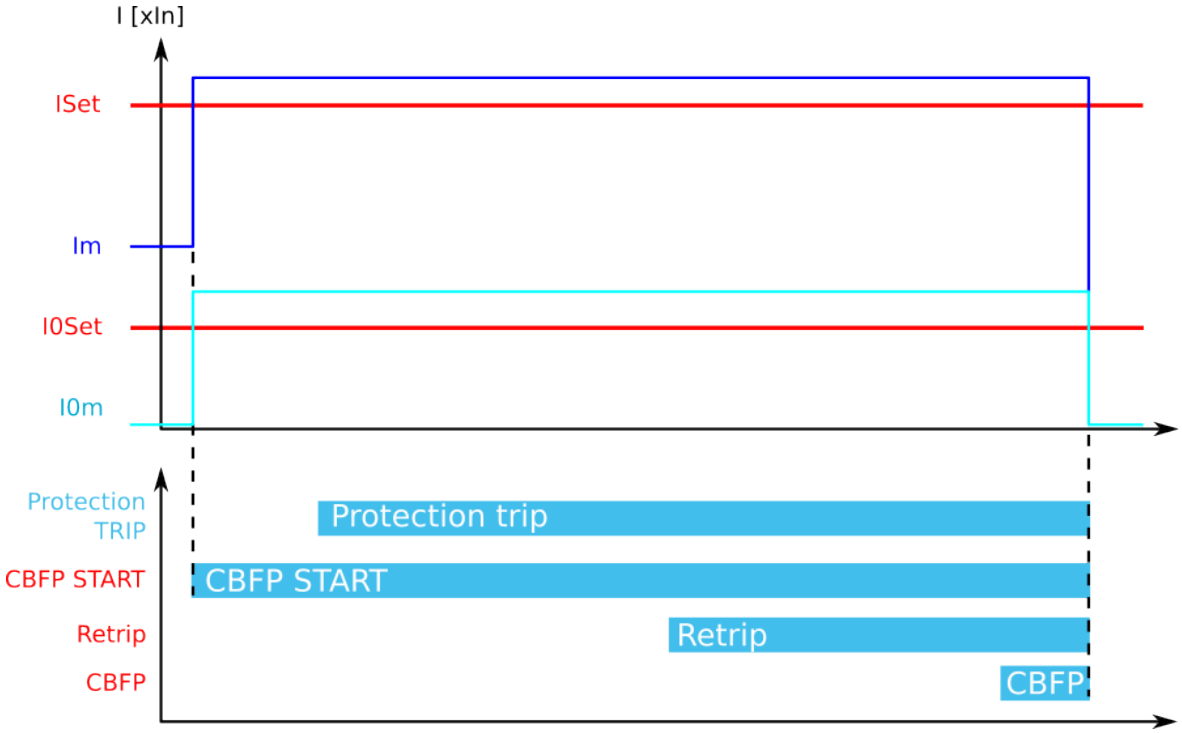

When the current threshold setting of I_{set} and/or $I0_{set}$ is exceeded, the current-based protection is activated and the counters for RETRIP and CBFP start calculating the set operating time. The tripping of the primary protection stage is not monitored in this configuration. Therefore, if the current is not reduced below the setting limit, a RETRIP signal is sent to the redundant trip coil. If the current is not reduced within the set time limit, the function also sends a CBFP signal to the incoming feeder breaker. If the primary protection function clears the fault, both counters (RETRIP and CBFP) are reset as soon as the measured current is below the threshold settings.

© Arcteq Relays Ltd
IM00014

Figure. 5.4.9 - 101. Retrip and CBFP when "Current and DO" is the selected criterion.

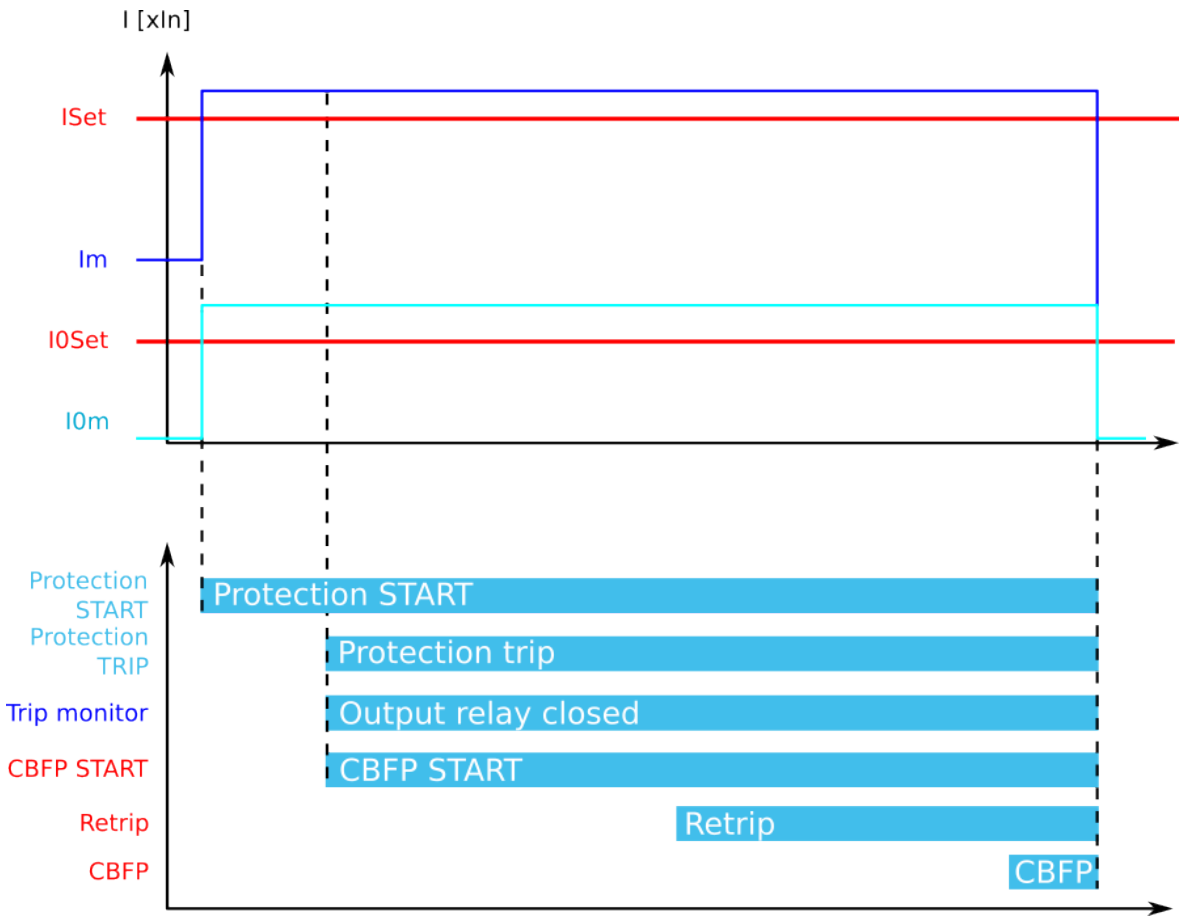

When the current threshold setting of I_{set} and/or $I0_{set}$ is exceeded, the current-based protection is activated. At the same time, the counters for RETRIP and CBFP are halted until the monitored output contact is controlled (that is, until the primary protection operates). When the tripping signal reaches the primary protection stage, the RETRIP and CBFP counters start calculating the set operating time. The tripping of the primary protection stage is constantly monitored in this configuration. If the current is not reduced below the setting limit or the primary stage tripping signal is not reset, a RETRIP signal is sent to the redundant trip coil. If the retripping fails and the current is not reduced below the setting limit or the primary stage tripping signal is not reset, the function also sends a CBFP signal to the incoming feeder circuit breaker. If the primary protection function clears the fault, both counters (RETRIP and CBFP) are reset as soon as the measured current is below the threshold settings or the tripping signal is reset. This configuration allows the CBFP to be controlled with current-based functions alone, and other function trips can be excluded from the CBFP functionality.

Figure. 5.4.9 - 102. Retrip and CBFP when "Current or DO" is the selected criterion.

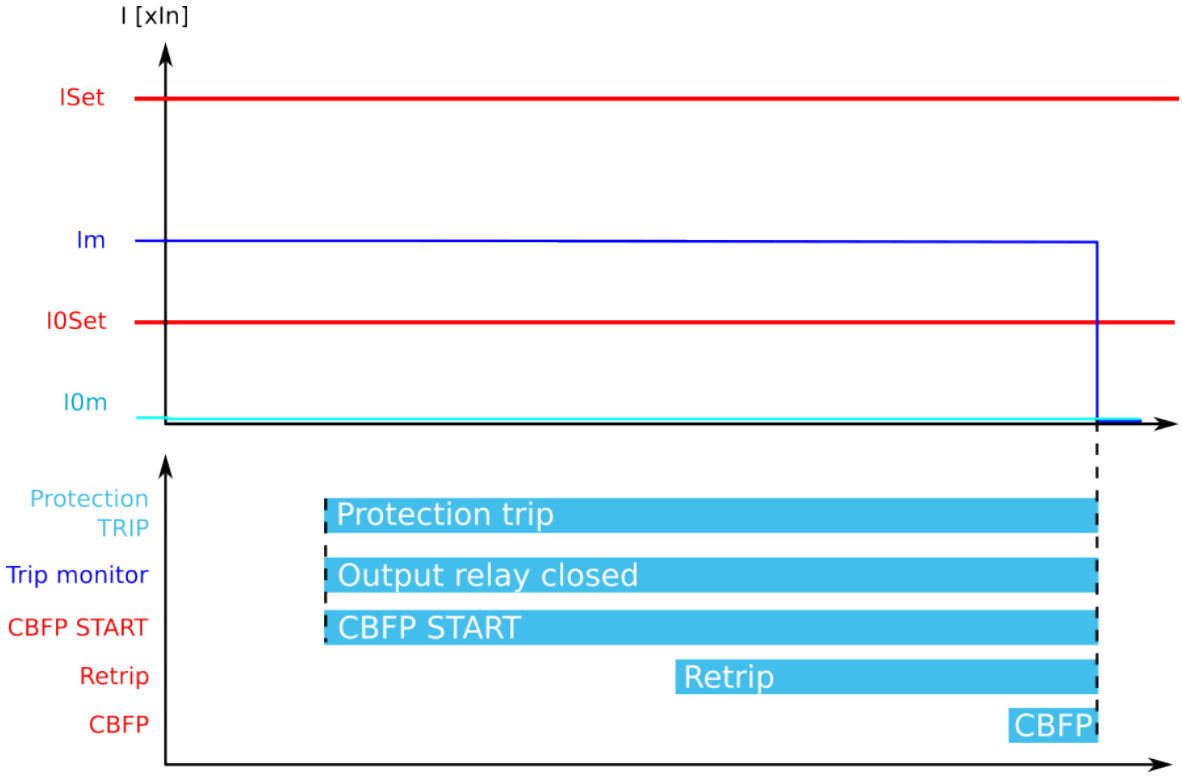

When the current threshold setting of I_{set} and/or $I0_{set}$ is exceeded, or the TRIP signal reaches the primary protection stage, the function starts counting down towards the RETRIP and CBFP signals. The tripping of the primary protection stage is constantly monitored in this configuration regardless of the current's status. The pick-up of the CBFP is active unless the current is reduced below the setting limit and the primary stage tripping signal is reset. If either of these conditions is met (i.e. the current is above the limit or the signal is active) for the duration of the set RETRIP time delay, a RETRIP signal is sent to the redundant trip coil. If either of the conditions is active for the duration of the set CBFP time delay, a CBFP signal is sent to the incoming feeder circuit breaker. If the primary protection function clears the fault, both counters (RETRIP and CBFP) are reset as soon as the measured current is below the threshold settings and the tripping signal is reset. This configuration allows the CBFP to be controlled with current-based functions alone, with added security from current monitoring. Other function trips can also be included in the CBFP functionality.

© Arcteq Relays Ltd
IM00014

Trip and CBFP in the device configuration

Figure. 5.4.9 - 103. Wiring diagram when Trip and CBFP are configured to the device.

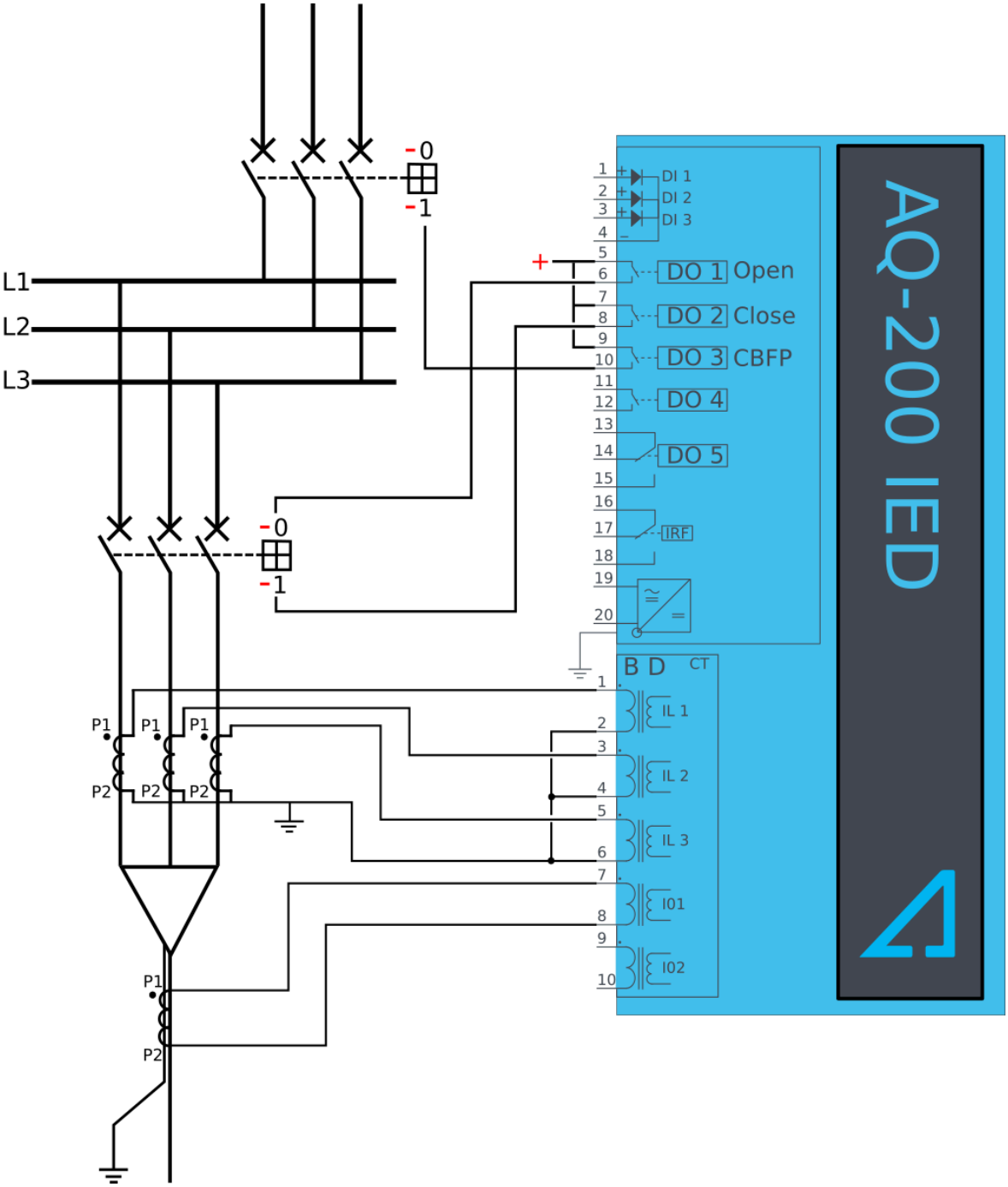

Probably the most common application is when the device's trip output controls the circuit breaker trip coil, while one dedicated CBFP contact controls the CBFP function. Below are a few operational cases regarding the various applications and settings of the CBFP function.

Figure. 5.4.9 - 104. CBFP when "Current" is the selected criterion.

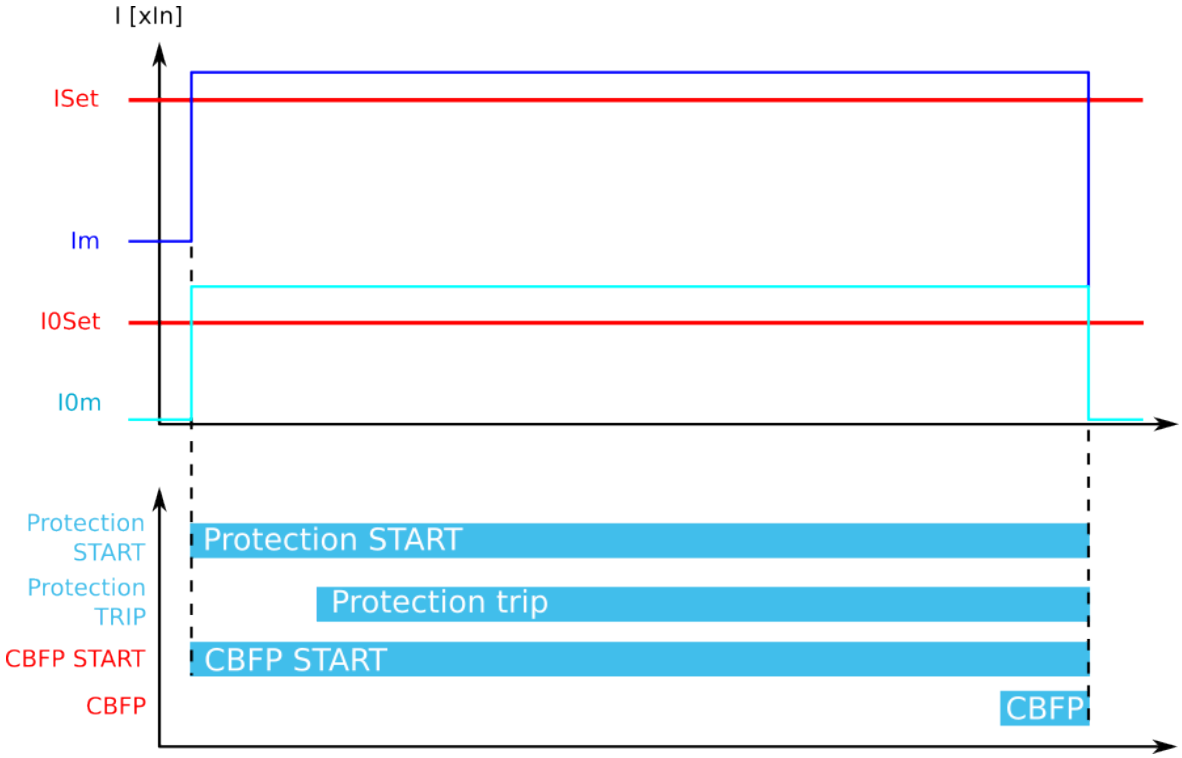

When the current threshold setting of I_{set} and/or $I0_{set}$ is exceeded, the current-based protection is activated and the counter for CBFP starts calculating the set operating time. The tripping of the primary protection stage is not monitored in this configuration. Therefore, if the current is not reduced below the setting limit, a CBFP signal is sent to the incoming feeder circuit breaker. If the primary protection function clears the fault, the counter for CBFP resets as soon as the measured current is below the threshold settings.

© Arcteq Relays Ltd
IM00014

Figure. 5.4.9 - 105. CBFP when "Current and DO" is the selected criterion.

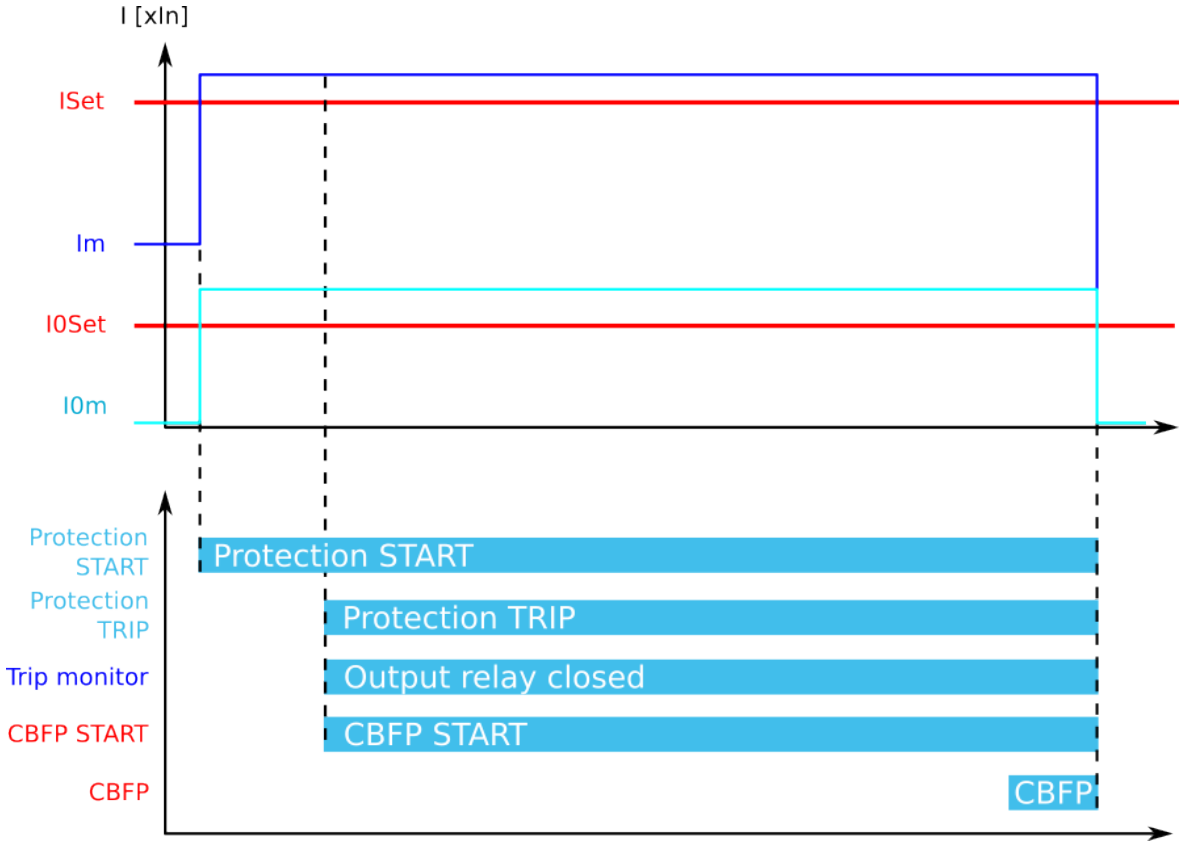

When the current threshold setting of I_{set} and/or $I0_{set}$ is exceeded, the current-based protection is activated. At the same time, the counter for CBFP is halted until the monitored output contact is controlled (that is, until the primary protection operates). When the tripping signal reaches the primary protection stage, the CBFP counter starts calculating the set operating time. The tripping of the primary protection stage is constantly monitored in this configuration. If the current is not reduced below the setting limit or the primary stage tripping signal is not reset, a CBFP signal is sent to the incoming feeder circuit breaker. The time delay counter for CBFP is reset as soon as the measured current is below the threshold settings or the tripping signal is reset. This configuration allows the CBFP to be controlled by current-based functions alone, and other function trips can be excluded from the CBFP functionality.

Figure. 5.4.9 - 106. CBFP when "Current or DO" is the selected criterion.

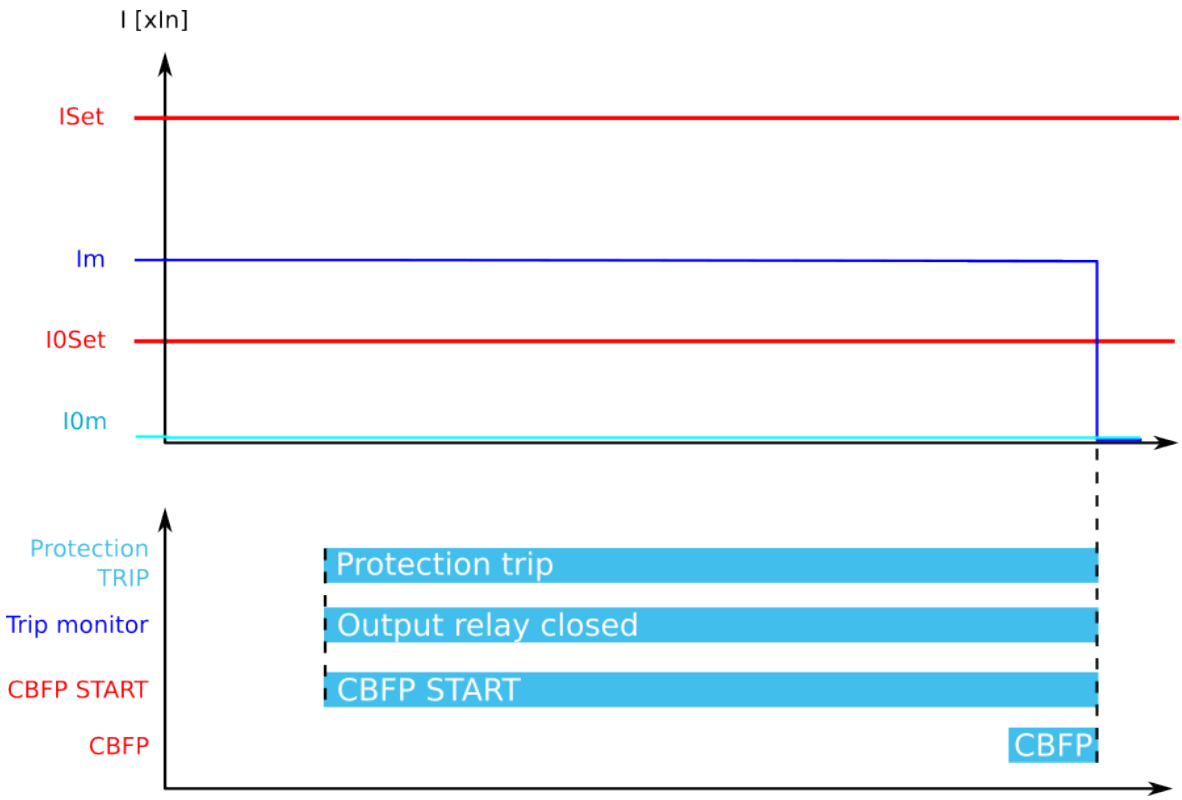

When the current threshold setting of I_{set} and/or $I0_{set}$ is exceeded, or the TRIP signal reaches the primary protection stage, the function starts counting down towards the CBFP signal. The tripping of the primary protection stage is constantly monitored in this configuration regardless of the current's status. The pick-up of the CBFP is active unless the current is reduced below the setting limit and the primary stage tripping signal is reset. If either of these conditions is met (i.e. the current is above the limit or the signal is active) for the duration of the set CBFP time delay, a CBFP signal is sent to the incoming feeder circuit breaker. The time delay counter for CBFP is reset as soon as the measured current is below the threshold settings and the tripping signal is reset. This configuration allows the CBFP to be controlled by current-based functions alone, with added security from current monitoring. Other function trips can also be included to the CBFP functionality.

© Arcteq Relays Ltd
IM00014

Device configuration as a dedicated CBFP unit

Figure. 5.4.9 - 107. Wiring diagram when the device is configured as a dedicated CBFP unit.

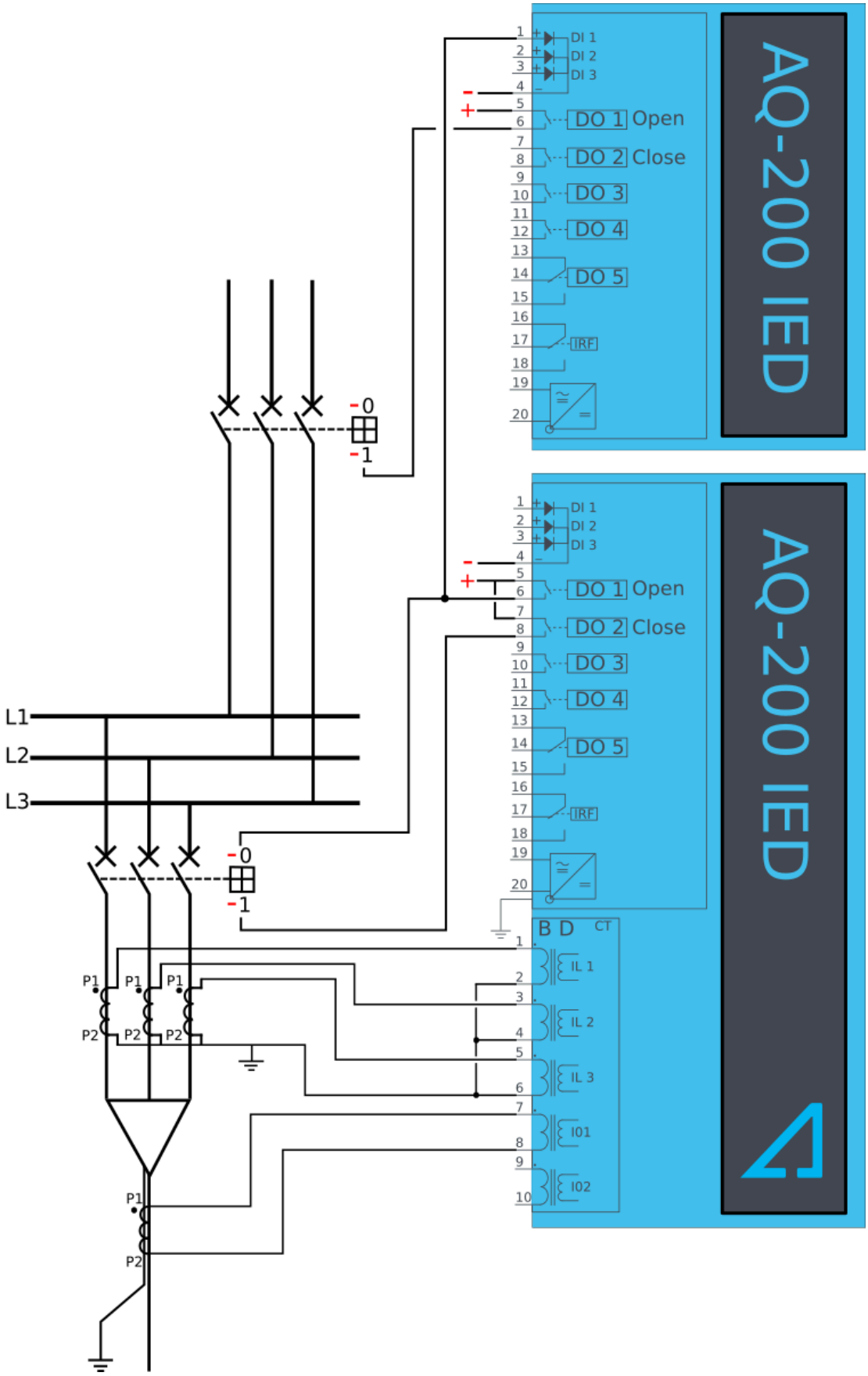

Some applications require a dedicated circuit breaker protection unit. When the CBFP function is configured to operate with a digital input signal, it can be used in these applications. When a device is used for this purpose, the tripping signal is wired to the device's digital input and the device's own TRIP signal is used only for the CBFP purpose. In this application's incoming feeder the RETRIP and CBFP signals are also available with different sets of requirements. The RETRIP signal can be used for tripping the section's feeder breaker and the CBFP signal for tripping the incoming feeder. The following example does not use retripping and the CBFP signal is used as the incoming feeder trip from the outgoing breaker trip signal. The TRIP signal can also be transported between different devices by using GOOSE messages.

Figure. 5.4.9 - 108. Dedicated CBFP operation from digital input signal.

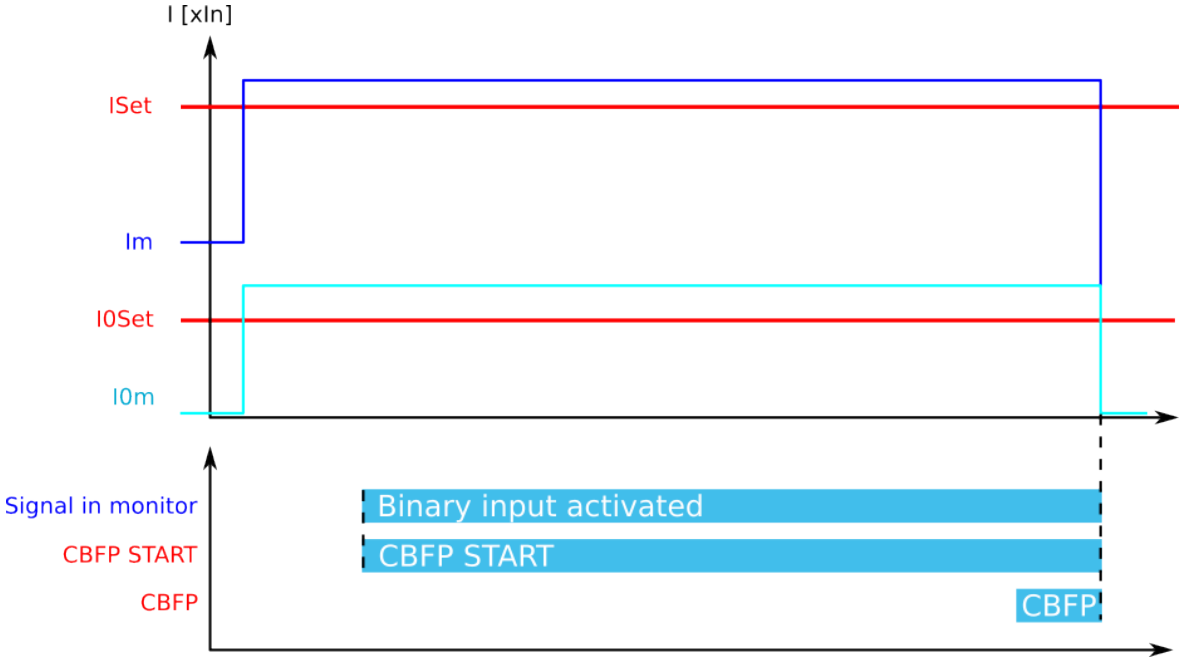

In this mode the CBFP operates only from a digital input signal. Both current and output relay monitoring can be used. The counter for the CBFP signal begins when the digital input is activated. If the counter is active until the CBFP counter is used, the device issues a CBFP command to the incoming feeder circuit breaker. In this application the device tripping signals from all outgoing feeders can be connected to one, dedicated CBFP device which operates either on current-based protection or on all possible faults' CBFP protection.

Events and registers

The circuit breaker failure protection function (abbreviated "CBF" in event block names) generates events and registers from the status changes in the events listed below. The user can select which event messages are stored in the main event buffer: ON, OFF, or both. The events triggered by the function are recorded with a time stamp.

The function's outputs can be used for direct I/O controlling and user logic programming. The function also provides a resettable cumulative counters for RETRIP, CBFP, CBFP START and BLOCKED events.

Table. 5.4.9 - 98. Event messages.

Event block name	Event names
CBF1	Start ON/OFF
CBF1	Retrip ON/OFF

© Arcteq Relays Ltd
IM00014

Event block name	Event names
CBF1	CBFP ON/OFF
CBF1	Block ON/OFF
CBF1	DO monitor ON/OFF
CBF1	Signal ON/OFF
CBF1	Phase current ON/OFF
CBF1	Res current ON/OFF

The function registers its operation into the last twelve (12) time-stamped registers. The register of the function records the ON event process data for ACTIVATED, BLOCKED, etc. The table below presents the structure of the function's register content.

Table. 5.4.9 - 99. Register content.

Register	Description
Date and time	dd.mm.yyyy hh:mm:ss.mss
Event	Event name
Max phase current	Highest phase current
Residual current	I01, I02 channel or calculated residual current
Time to RETR	Time remaining to retrip activation
Time to CBFP	Time remaining to CBFP activation
Setting group in use	Setting group 1...8 active

5.4.10 Low-impedance or high-impedance restricted earth fault/ cable end differential protection (I0d>; 87N)

The low-impedance or high-impedance restricted earth fault function is used for residual differential current measurement for transformers. This function can also be used as the cable end differential function. The operating principle is low-impedance differential protection with bias characteristics the user can set. A differential current is calculated with the sum of the phase currents and the selected residual current input. In cable end differential mode the function provides natural measurement unbalance compensation for higher operating sensitivity in monitoring cable end faults.

The restricted earth fault function constantly monitors phase currents and selected residual current instant values as well as calculated bias current and differential current magnitudes.

Figure. 5.4.10 - 109. Simplified function block diagram of the I0d> function.

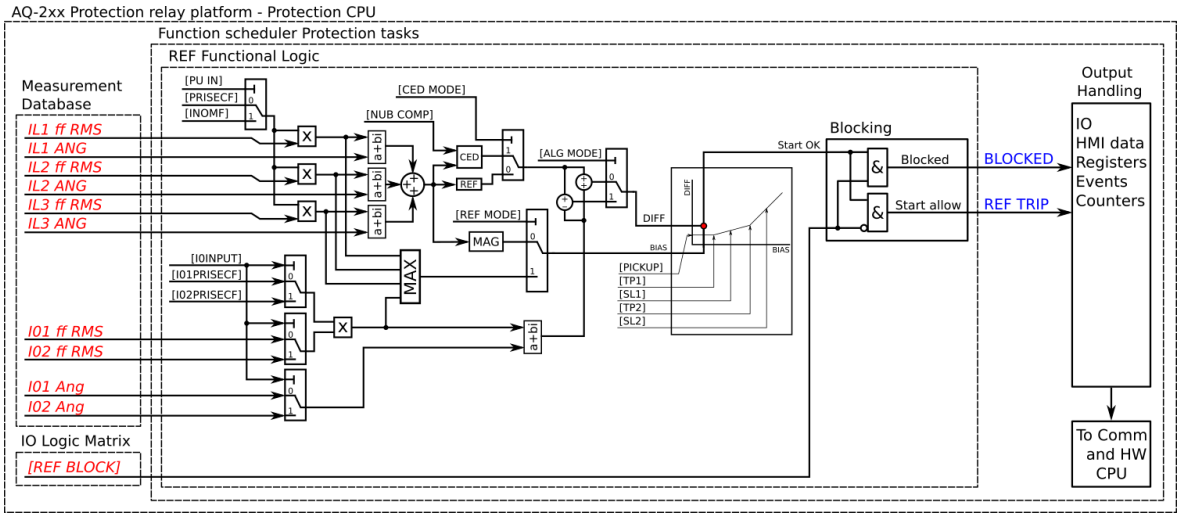

Measured input

The function block uses fundamental frequency component of phase current and resisual current measurement values. Both calculated residual currents and measured residual currents are always used. The user can select either I_{01} or I_{02} for residual current measurement.

Please note that when the function is in cable end differential mode, the difference is only calculated when the measured I_0 current is available.

Table. 5.4.10 - 100. Measurement inputs of the I0d> function.

Signal	Description
I_{L1}RMS	Fundamental frequency component of phase L1 (A) current measurement
I_{L2}RMS	Fundamental frequency component of phase L2 (B) current measurement
I_{L3}RMS	Fundamental frequency component of phase L3 (C) current measurement
I_{01}RMS	Fundamental frequency component of residual input I01 measurement
I_{02}RMS	Fundamental frequency component of residual input I02 measurement
I_{L1}Ang	Angle of phase L1 (A) current
I_{L2} Ang	Angle of phase L2 (B) current
I_{L3} Ang	Angle of phase L3 (C) current
I_{01} Ang	Angle of residual input I01
I_{02} Ang	Angle of residual input I02

General settings

The following general settings define the general behavior of the function. These settings are static i.e. it is not possible to change them by editing the setting group.

© Arcteq Relays Ltd
IM00014

Table. 5.4.10 - 101. General settings.

Name	Range	Default	Description
I0d> force status to	• Normal • Trip • Blocked	Normal	Force the status of the function. Visible only when *Enable stage forcing* parameter is enabled in *General* menu.
Restricted earth fault (REF) or Cable End Differential	• REF • CED	REF	Selection of the operating characteristics. If REF is selected, the function operates with normal accuracies. If CED is selected, the natural unbalance created by the phase current CT:s can be compensated for more sensitive operation. The default setting is REF.
Compenstate natural unbalance	• - • Comp	-	When activated while the line is energized, the currently present calculated residual current is compensated to 0. This compensation only has an effect in the CED mode.

Operating characteristics

The current-dependent pick-up and activation of the function are controlled by setting parameters, which define the current calculating method used as well as the operating characteristics.

Setting group selection controls the operating characteristics of the function, i.e. the user or user-defined logic can change function parameters while the function is running.

Table. 5.4.10 - 102. Pick-up settings.

Name	Range	Step	Default	Description
I0 Input	• I01 • I02	-	I01	Selection of the used residual current measurement input.
I0 Direction	• Add • Subtract	-	Add	Differential current calculation mode. This matches the directions of the calculated and measured residual currents to the application. The default setting (Add) means that I0Calc + I01 or I0Calc + I02 in a through fault yields no differential current. See figures below for connection examples.
Bias current calculation	• Residual current (3I0 + I0Calc)/2 • Maximum (Phase and I0 max)	-	Residual current	Selection of the bias current calculation. Differential characteristics biasing can use either the calculated residual current averages or the maximum of all measured currents. The residual current mode is more sensitive while the maximum current is coarser.
I0d> pick-up	0.01…50.00% (of I_n)	0.01%	10%	Setting for basic sensitivity of the differential characteristics.
Turnpoint 1	0.01…50.00×I_n	0.01×I_n	1.00×I_n	Setting for first turn point in the bias axe of the differential characteristics.
Slope 1	0.01…150.00%	0.01%	10.00%	Setting for the first slope of the differential characteristics.
Turnpoint 2	0.01…50.00×I_n	0.01×I_n	3.00×I_n	Setting for second turn point in the bias axe of the differential characteristics.

Name	Range	Step	Default	Description
Slope 2	0.01…250.00%	0.01%	40.00%	Setting for the second slope of the differential characteristics.

Figure. 5.4.10 - 110. "I0 direction" parameter must be set to "Subtract" when current transformers are facing the same direction.

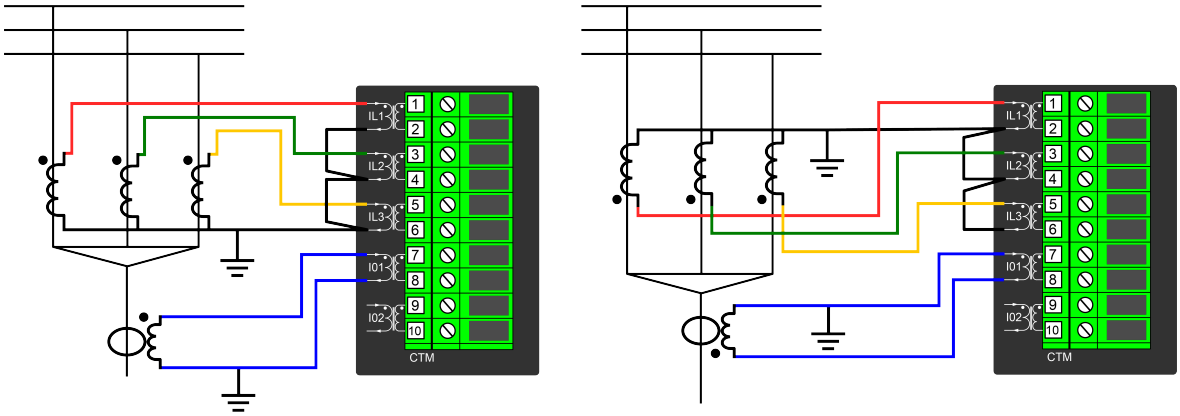

Figure. 5.4.10 - 111. "I0 direction" parameter must be set to "Add" when current transformers are facing each other or away from each other.

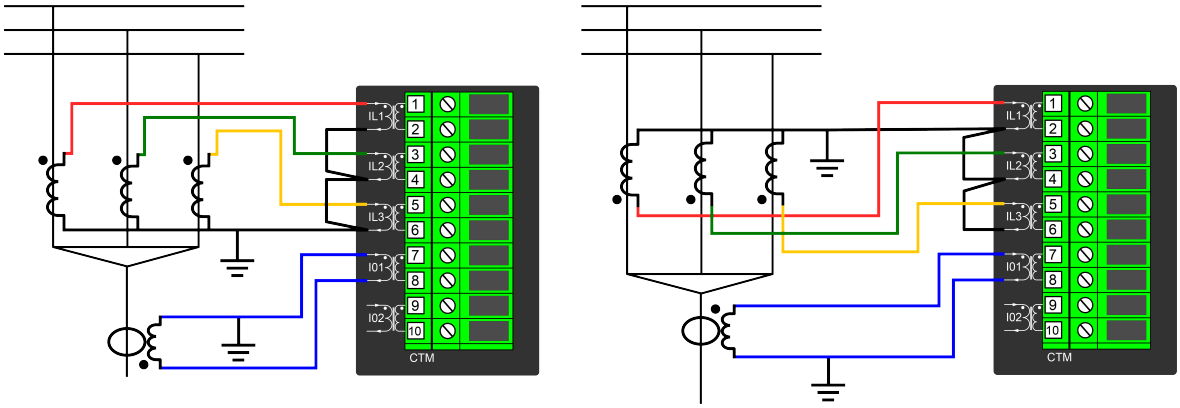

The following figure presents the differential characteristics with default settings.

© Arcteq Relays Ltd
IM00014

Figure. 5.4.10 - 112. Differential characteristics for the I0d> function with default settings.

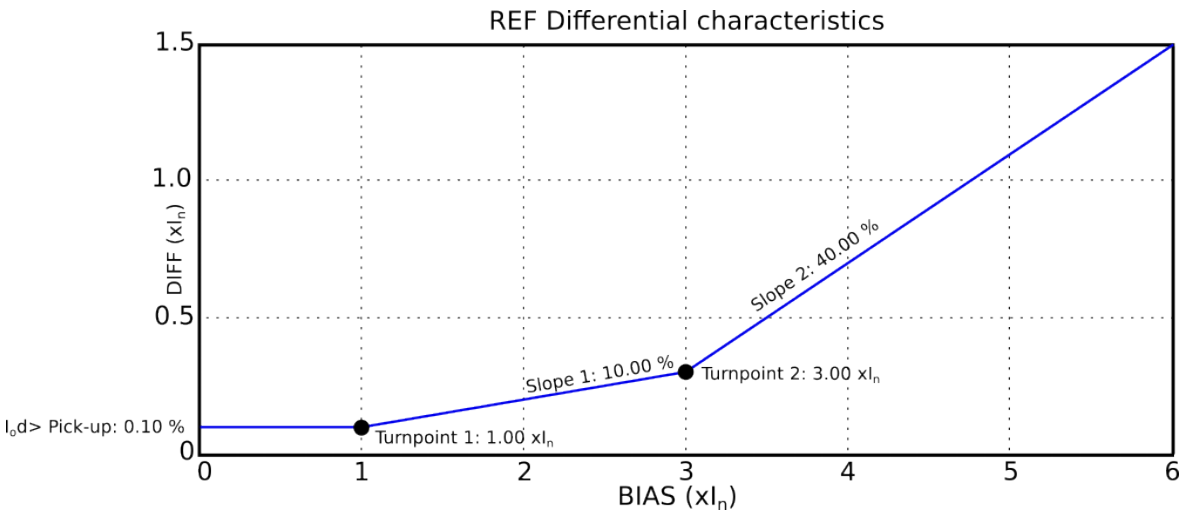

The equations for the differential characteristics are the following:

Figure. 5.4.10 - 113. Differential current (the calculation is based on user-selected inputs and direction).

$$I_{Diff+I01} = \left(\overline{IL1} + \overline{IL2} + \overline{IL3}\right) + \overline{I01}$$

$$I_{Diff-I01} = \left(\overline{IL1} + \overline{IL2} + \overline{IL3}\right) - \overline{I01}$$

$$I_{Diff+I02} = \left(\overline{IL1} + \overline{IL2} + \overline{IL3}\right) + \overline{I02}$$

$$I_{Diff-I02} = \left(\overline{IL1} + \overline{IL2} + \overline{IL3}\right) - \overline{I02}$$

Figure. 5.4.10 - 114. Bias current (the calculation is based on the user-selected mode).

$$I_{Bias\ average\ I01} = \frac{\left|\overline{IL1} + \overline{IL2} + \overline{IL3}\right| + \left|\overline{I01}\right|}{2}$$

$$I_{Bias\ average\ I02} = \frac{\left|\overline{IL1} + \overline{IL2} + \overline{IL3}\right| + \left|\overline{I02}\right|}{2}$$

$$I_{Bias\ \max I01} = MAX(|IL1|, |IL2|, |IL3|, |I01|)$$

$$I_{Bias\ \max I01} = MAX(|IL1|, |IL2|, |IL3|, |I02|)$$

Figure. 5.4.10 - 115. Characteristics settings.

$$Diff_{bias<TP1} = I0_{d>pick-up}$$

$$Diff_{biasTP1...TP2} = SL1 \times (Ix - TP1) + I0_{d>pick-up}$$

$$Diff_{bias>TP2} = SL2 \times (Ix - TP2) + SL1 \times (TP2 - TP1) + I0_{d>pick-up}$$

Read-only parameters

The function's *Info* page displays useful, real-time information on the state of the protection function. It is accessed either through the device's HMI display, or through the setting tool software when it is connected to the device and its Live Edit mode is active.

Table. 5.4.10 - 103. Information displayed by the function.

Name	Range	Description
I0d> condition	• Normal • Trip • Blocked	Displays the status of the protection function.

Function blocking

The block signal is checked in the beginning of each program cycle. The blocking signal is received from the blocking matrix in the function's dedicated input. If the blocking signal is not activated when the pick-up element activates, a TRIP signal is generated and the function proceeds to the time characteristics calculation.

If the blocking signal is active when the pick-up element activates, a BLOCKED signal is generated and the function does not process the situation further. If the TRIP function has been activated before the blocking signal, it resets and processes the release time characteristics similarly to when the pick-up signal is reset.

The variables the user can set are binary signals from the system. The blocking signal needs to reach the device minimum of 5 ms before the set operating delay has passed in order for the blocking to activate in time.

The following figures present some typical applications for this function.

© Arcteq Relays Ltd
IM00014

Figure. 5.4.10 - 116. Cable end differential with natural unbalance in the phase current measurement.

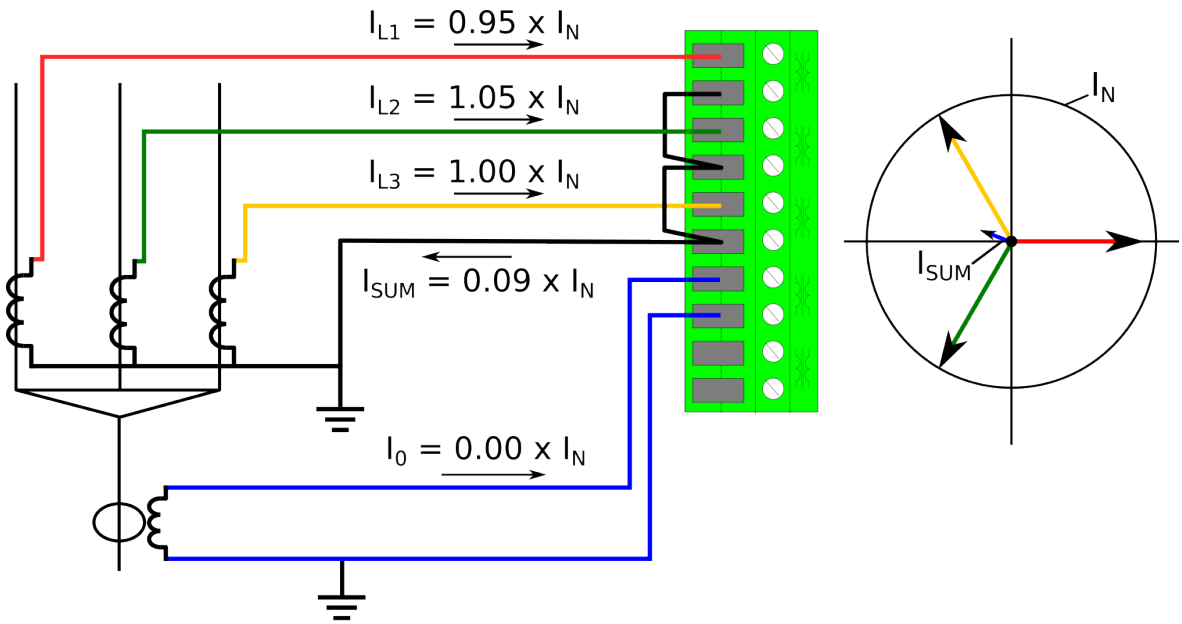

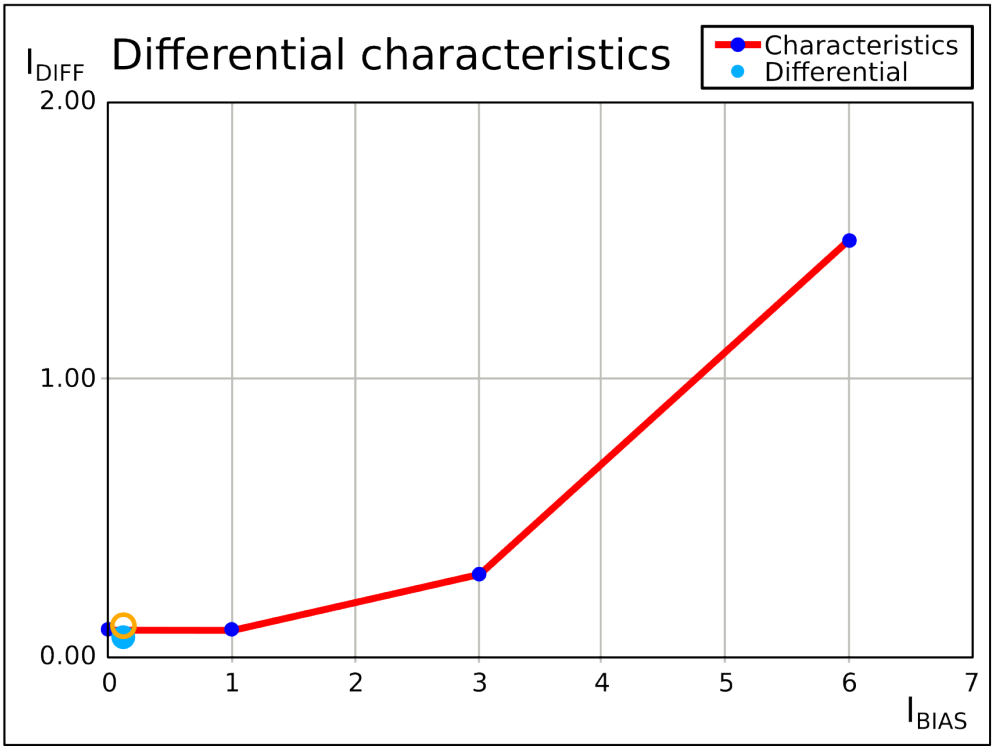

When calculating residual current from the phase currents, the natural unbalance can be around 10 % while the used CTs are still within the promised 5P class (which is probably the most common CT accuracy class). When the current natural unbalance is compensated in this situation, the differential settings may be set to be more sensitive and the natural unbalance does not, therefore, affect the calculation.

Figure. 5.4.10 - 117. Cable end differential when a fault occurs.

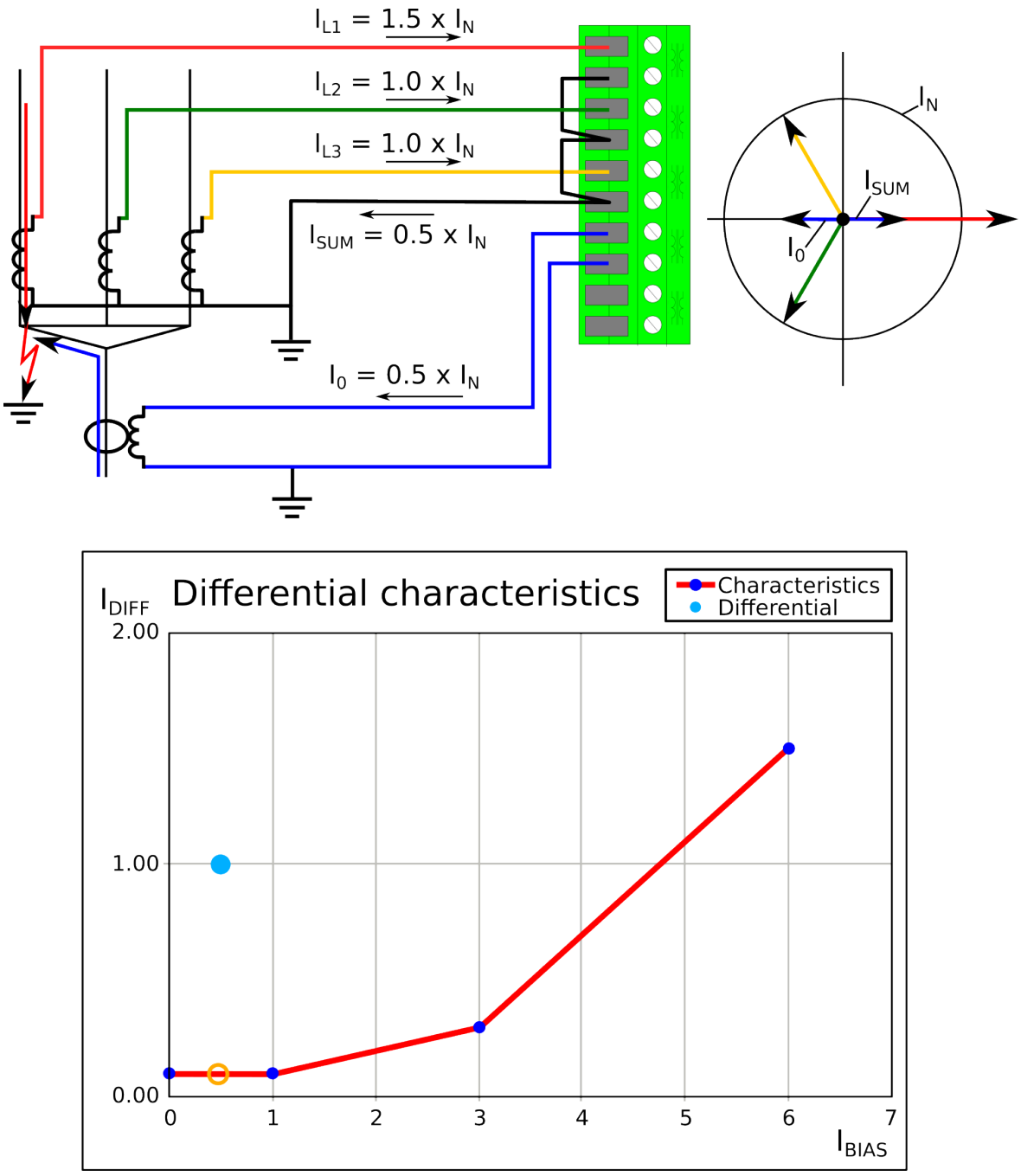

If a starting fault occurs in the cable end, the CED mode catches the difference between the ingoing and the outgoing residual currents. The resulting signal can be used for alarming or tripping purposes for the feeder with the failing cable end. The user can freely change both the settings and the sensitivity of the algorithm.

Restricted earth fault protection is usually used in the Y winding of a power transformer. This function is needed to prevent the main differential protection from being tripped by faults occurring outside the protection area; in some cases, the function has to be disabled or its sensitivity limited to catch earth faults inside the protection area. For this purpose, the restricted earth fault function is stable since it only monitors the side it is wired to, and compares the calculated and measured residual currents. During an outside earth fault the circulating residual current in the faulty phase winding does not cause a trip because the comparison of the measured starpoint current and the calculated residual current differential is close to zero.

© Arcteq Relays Ltd
IM00014

Figure. 5.4.10 - 118. Restricted earth fault outside a Y winding transformer.

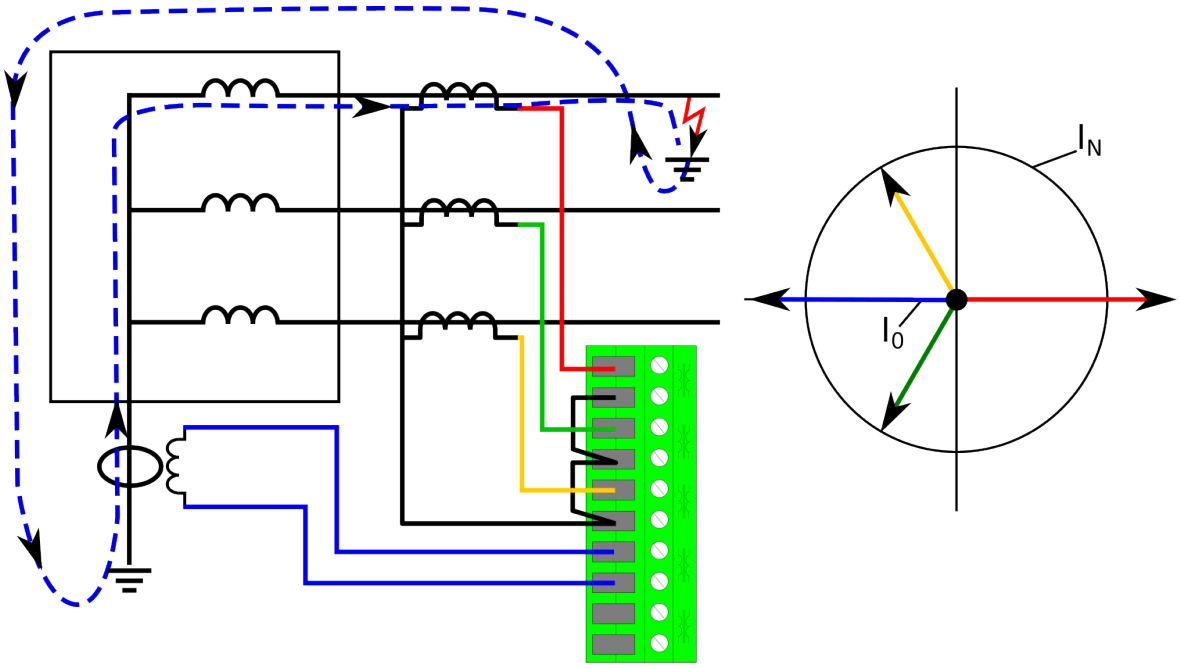

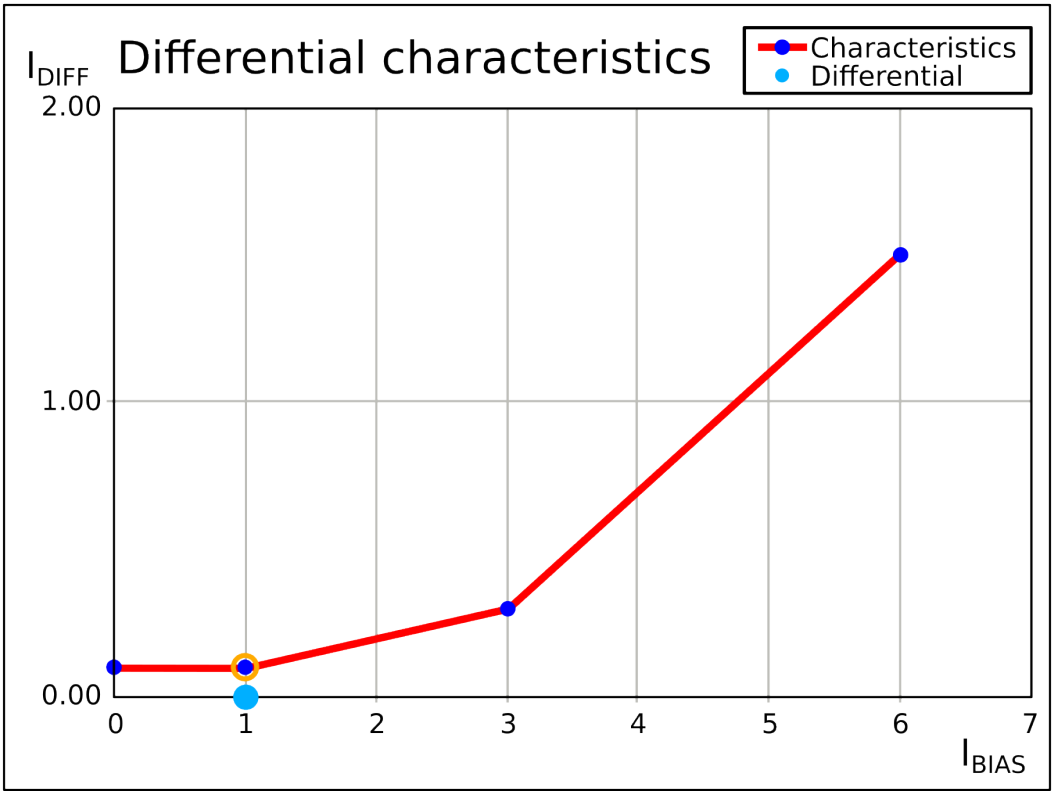

If the fault is located inside of the transformer and thus inside of the protection area, the function catches the fault with high sensitivity. Since the measured residual current now flows in the opposite direction than in the outside fault situation, the measured differential current is high.

Figure. 5.4.10 - 119. Restricted earth fault inside a Y winding transformer.

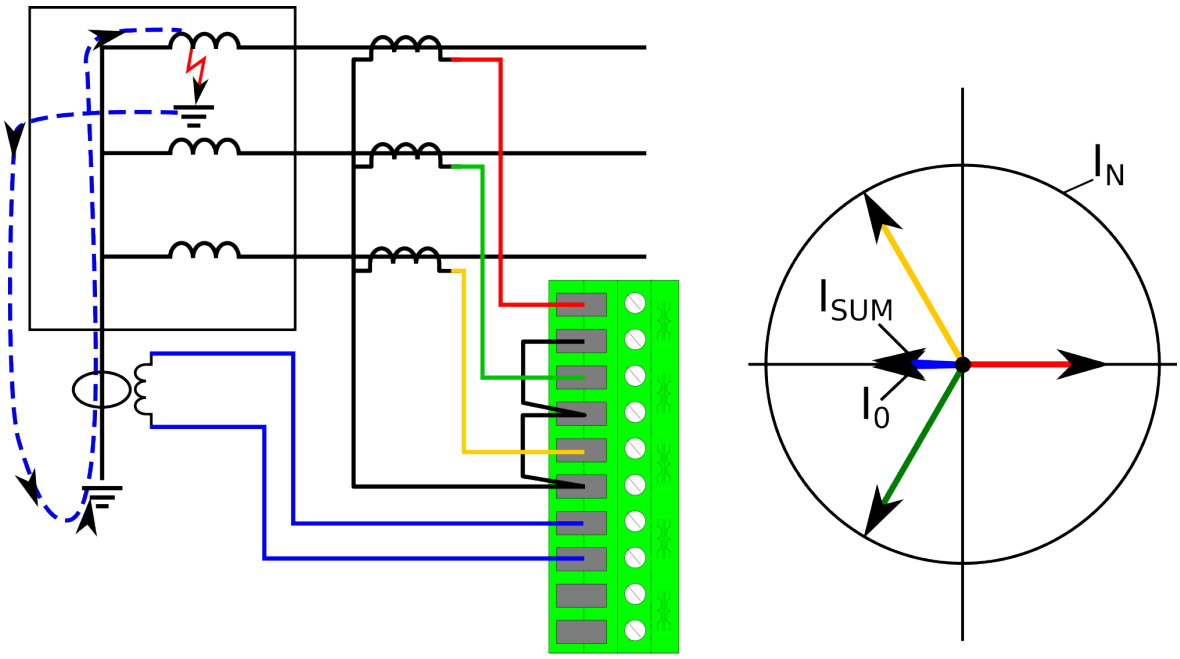

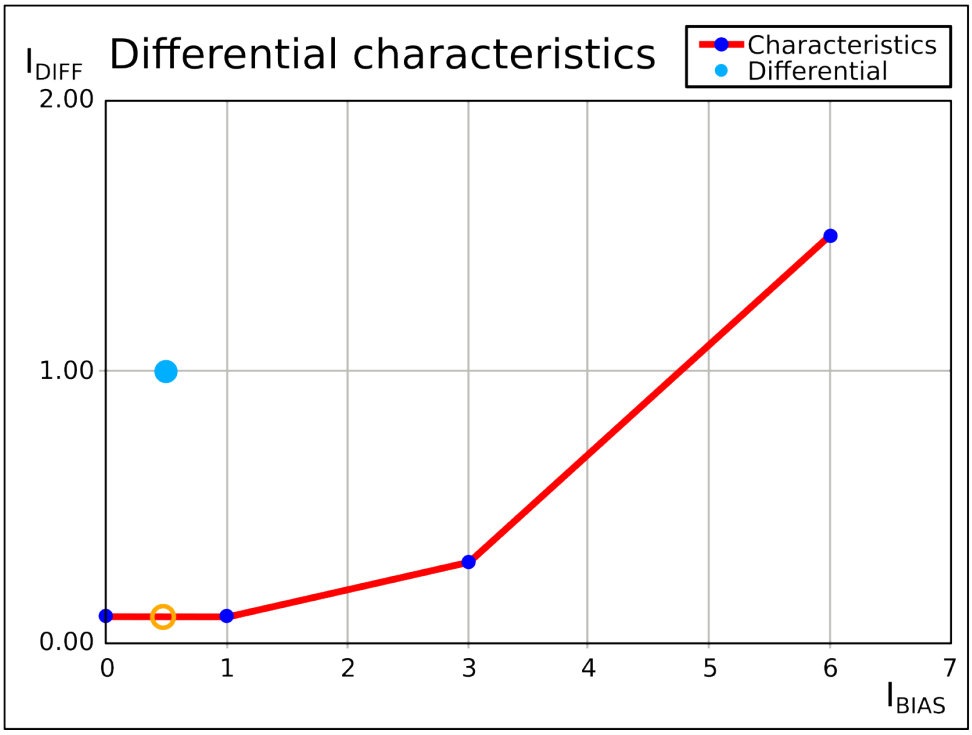

Events and registers

The restricted earth fault function (abbreviated "REF" in event block names) generates events and registers from the status changes in the events listed below. The user can select which event messages are stored in the main event buffer: ON, OFF, or both. The events triggered by the function are recorded with a time stamp.

The function's outputs can be used for direct I/O controlling and user logic programming. The function also provides a resettable cumulative counter for the TRIP and BLOCKED events.

© Arcteq Relays Ltd
IM00014

Table. 5.4.10 - 104. Event messages.

Event block name	Event names
REF1	I0d> (87N) Trip ON/OFF
REF1	I0d> (87N) Block ON/OFF

The function registers its operation into the last twelve (12) time-stamped registers. The register of the function records the ON event process data for ACTIVATED, BLOCKED, etc. The table below presents the structure of the function's register content.

Table. 5.4.10 - 105. Register content.

Register	Description
Date and time	dd.mm.yyyy hh:mm:ss.mss
Event	Event name
Trigger currents	• Biascurrent • Diffcurrent • Characteristics diff
Maximum trigger currents	• Biascurrent max • Diffcurrent max • Characteristics diff max
Residual currents	• I0Calc • I0 meas
Setting group in use	Setting group 1...8 active

5.4.11 Overvoltage protection (U>; 59)

The overvoltage function is used for instant and time-delayed overvoltage protection. Devices with a voltage protection module has four (4) available stages of the function (U>, U>>, U>>>, U>>>>). The function constantly measures phase voltage magnitudes or line-to-line magnitudes.

Figure. 5.4.11 - 120. Simplified function block diagram of the U> function.

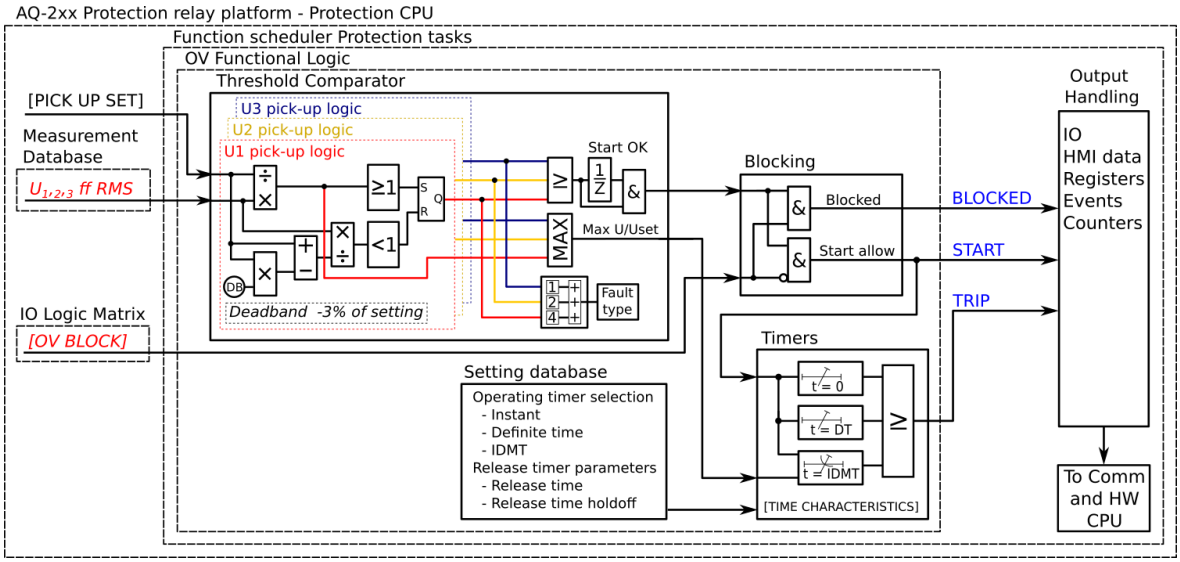

Measured input

The function block uses fundamental frequency component of line-to-line or line-to-neutral (as the user selects). If the protection is based on line-to-line voltage, overvoltage protection is not affected by earth faults in isolated or compensated networks.

Table. 5.4.11 - 106. Measurement input of the U> function.

Signal	Description
U_{L12}RMS	Fundamental frequency component of U_{L12}/V voltage measurement
U_{L23}RMS	Fundamental frequency component of U_{L23}/V voltage measurement
U_{L31}RMS	Fundamental frequency component of U_{L31}/V voltage measurement
U_{L1}RMS	Fundamental frequency component of U_{L1}/V voltage measurement
U_{L2}RMS	Fundamental frequency component of U_{L2}/V voltage measurement
U_{L3}RMS	Fundamental frequency component of U_{L3}/V voltage measurement

Table. 5.4.11 - 107. Measured magnitude selection settings.

Name	Range	Default	Description
Measured magnitude	• P-P voltages • P-E voltages • U3 input (2LL-U3SS) • U4 input (SS)	P-P voltages	Selection of phase-to-phase or phase-to-earth voltages. Additionally, the U3 or U4 input can be assigned as the voltage channel to be supervised.

© Arcteq Relays Ltd
IM00014

Figure. 5.4.11 - 121. Selectable measurement magnitudes with 3LN+U4 VT connection.

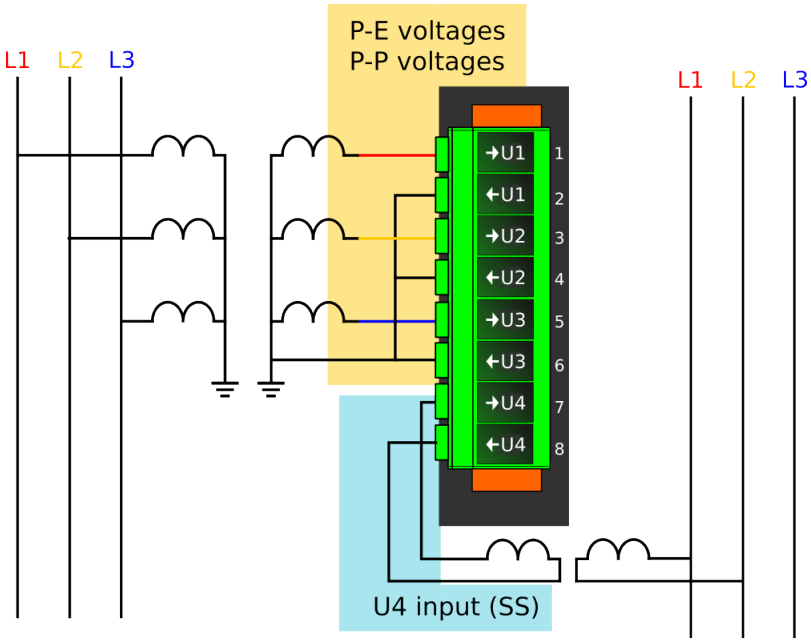

Figure. 5.4.11 - 122. Selectable measurement magnitudes with 3LL+U4 VT connection (P-E voltages not available without residual voltage).

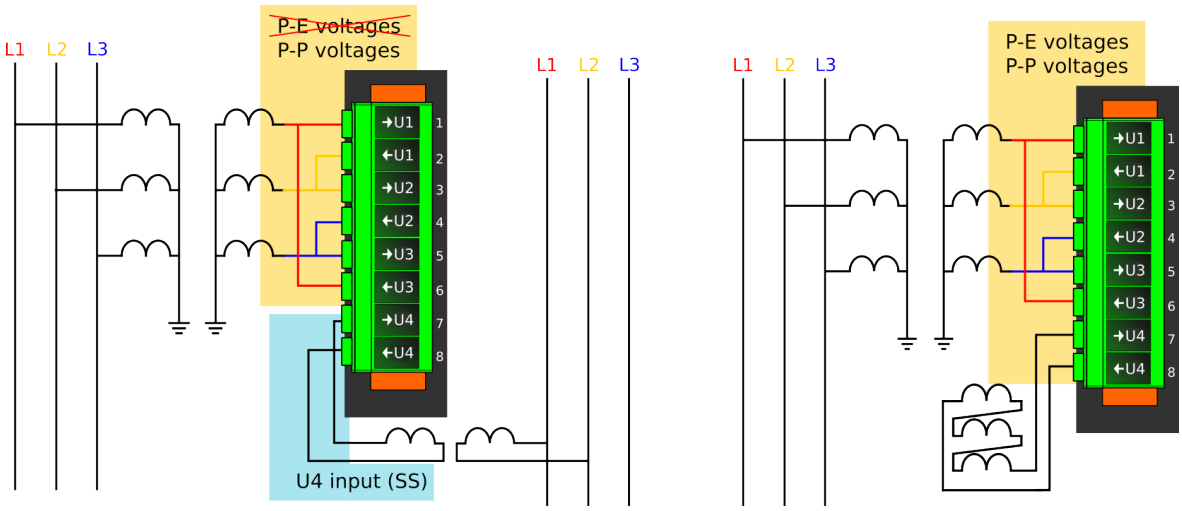

Figure. 5.4.11 - 123. Selectable measurement magnitudes with 2LL+U3+U4 VT connection (P-E voltages not available without residual voltage).

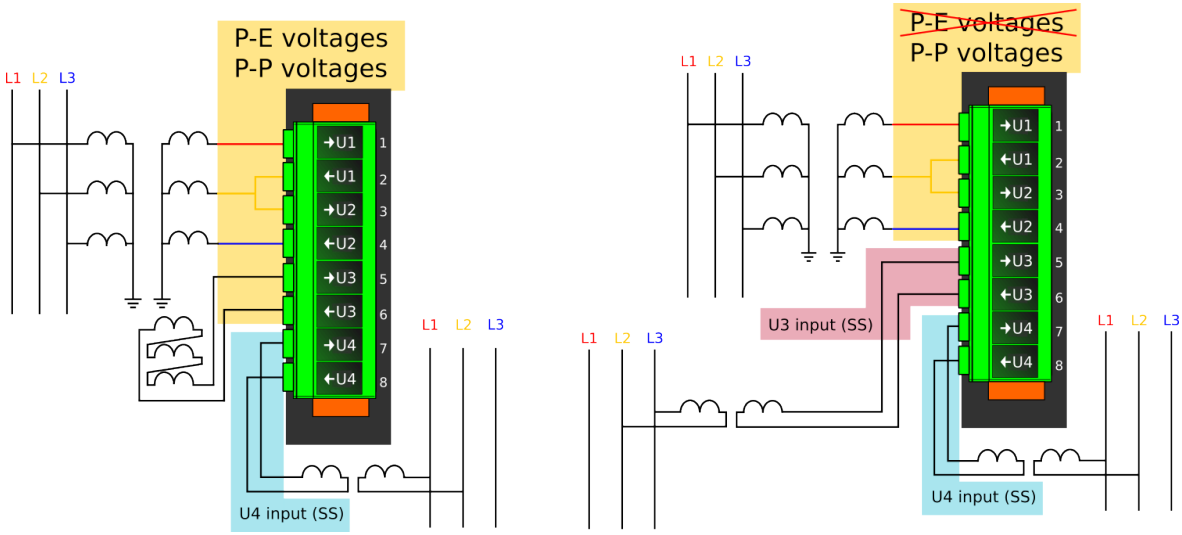

P-P Voltages and *P-E Voltages* selections follow phase-to-neutral or phase-to-phase voltages in the first three voltage channels (or two first voltage channels in the 2LL+U3+U4 mode). *U4 input* selection follows the voltage in Channel 4. *U3Input* selection only follows the voltage in Channel 3 if the 2LL+U3+U4 mode is in use.

General settings

The following general settings define the general behavior of the function. These settings are static i.e. it is not possible to change them by editing the setting group.

Table. 5.4.11 - 108. General settings of the function.

Name	Range	Default	Description
U> force status to	• Normal • Start • Trip • Blocked	Normal	Force the status of the function. Visible only when *Enable stage forcing* parameter is enabled in *General* menu.

Pick-up settings

The U_{set} setting parameter controls the pick-up of the U> function. This defines the maximum allowed measured voltage before action from the function. The function constantly calculates the ratio between the U_{set} and the measured magnitude (U_m) for each of the three voltages. The reset ratio of 97 % is built into the function and is always relative to the U_{set} value. The setting value is common for all measured amplitudes, and when the U_m exceeds the U_{set} value (in single, dual or all voltages) it triggers the pick-up operation of the function.

Setting group selection controls the operating characteristics of the function, i.e. the user or user-defined logic can change function parameters while the function is running.

© Arcteq Relays Ltd
IM00014

Table. 5.4.11 - 109. Pick-up settings.

Name	Range	Step	Default	Description
Operation mode	• 1 voltage • 2 voltages • 3 voltages	-	1 voltage	Pick-up criteria selection
U_{set}	50.00…150.00%U_n	0.01%U_n	105%U_n	Pick-up setting

Read-only parameters

The function's *Info* page displays useful, real-time information on the state of the protection function. It is accessed either through the device's HMI display, or through the setting tool software when it is connected to the device and its Live Edit mode is active.

Table. 5.4.11 - 110. Information displayed by the function.

Name	Range	Step	Description
U< pick-up setting	0.0...1 000 000.0V	0.1V	The primary voltage required for tripping. The displayed pick-up voltage level depends on the pick-up setting and the voltage transformer settings.
Expected operating time	0.000...1800.000s	0.005s	Displays the expected operating time when a fault occurs. When IDMT mode is used, the expected operating time depends on the measured voltage value. If the measured voltage changes during a fault, the expected operating time changes accordingly.
Time remaining to trip	-1800.000...1800.000s	0.005s	When the function has detected a fault and counts down time towards a trip, this displays how much time is left before tripping occurs.
$U_{A(B)\,meas}/U_{set}$ at the moment	0.00...1250.00U_m/U_{set}	0.01U_m/U_{set}	The ratio between U_A or U_{AB} voltage and the pick-up value.
$U_{B(c)\,meas}/U_{set}$ at the moment	0.00...1250.00U_m/U_{set}	0.01U_m/U_{set}	The ratio between U_B or U_{BC} voltage and the pick-up value.
$U_{C(A)\,meas}/U_{set}$ at the moment	0.00...1250.00U_m/U_{set}	0.01U_m/U_{set}	The ratio between U_C or U_{CA} voltage and the pick-up value.
U_{meas}/U_{set} at the moment	0.00...1250.00U_m/U_{set}	0.01U_m/U_{set}	The ratio between the measured voltage and the pick-up value.

Function blocking

The blocking signal is evaluated at the start of each program cycle. The blocking signals are connected to the function's dedicated input, which can be configured in the *IO → Blocking Input Control* tab of the function.

- When the pick-up element activates and the blocking signal is not active, a START signal is generated, and the function starts or continues with the trip time countdown.
- When the pick-up element activates and the blocking signal is active, a BLOCKED signal is generated, and the function does not process the event further.
- When a START signal is already active and the blocking input signal becomes active, the START signal is reset and BLOCKED signal is generated. The release time characteristics are then processed in the same way as when the pick-up signal is reset.

The blocking signal needs to reach the device minimum of 5 ms before the set operating delay has passed in order for the blocking to activate in time.

Operating time characteristics for trip and reset

The operating timers' behavior during a function can be set for TRIP signal and also for the release of the function in case the pick-up element is reset before the trip time has been reached. There are three basic operating modes available for the function:

- Instant operation: gives the TRIP signal with no additional time delay simultaneously with the START signal.
- Definite time operation (DT): gives the TRIP signal after a user-defined time delay regardless of the measured voltage as long as the voltage is above the U_{set} value and thus the pick-up element is active (independent time characteristics).
- Inverse definite minimum time (IDMT): gives the TRIP signal after a time which is in relation to the set pick-up voltage U_{set} and the measured voltage U_m (dependent time characteristics).

The IDMT function follows this formula:

$$t = \frac{k}{\left(\frac{Um}{Us}\right)^{a} - 1}$$

Where:

- t = operating time
- k = time dial setting
- U_m = measured voltage
- U_s = pick-up setting
- a = IDMT Multiplier setting

The following table presents the setting parameters for the function's time characteristics.

Table. 5.4.11 - 111. Setting parameters for operating time characteristics.

Name	Range	Step	Default	Description
Delay type	• DT • IDMT	-	DT	Selection of the delay type time counter. The selection possibilities are dependent (IDMT, Inverse Definite Minimum Time) and independent (DT, Definite Time) characteristics.
Definite operating time delay	0.000…800.000s	0.005s	0.040s	Definite time operating delay. The setting is active and visible when DT is the selected delay type. When set to 0.000 s, the stage operates as instant stage without added delay. When the parameter is set to 0.005...1800 s, the stage operates as independent delayed.

© Arcteq Relays Ltd
IM00014

Name	Range	Step	Default	Description
Time dial setting k	0.01…60.00s	0.01s	0.05s	This setting is active and visible when IDMT is the selected delay type. Time dial/multiplier setting for IDMT characteristics.
IDMT Multiplier	0.01…25.00s	0.01s	1.00s	This setting is active and visible when IDMT is the selected delay type. IDMT time multiplier in the U_m/U_{set} power.

Table. 5.4.11 - 112. Setting parameters for reset time characteristics.

Name	Range	Step	Default	Description
Release time delay	0.000…150.000s	0.005s	0.06s	Resetting time. The time allowed between pick-ups if the pick-up has not led to a trip operation. During this time the START signal is held on for the timers if the delayed pick-up release is active.
Delayed pick-up release	• No • Yes	-	Yes	Resetting characteristics selection either as time-delayed or as instant after the pick-up element is released. If activated the START signal is reset after the set release time delay.
Time calc reset after release time	• No • Yes	-	Yes	Operating timer resetting characteristics selection. When active, the operating time counter is reset after a set release time if the pick-up element is not activated during this time. When disabled, the operating time counter is reset directly after the pick-up element is reset.
Continue time calculation during release time	• No • Yes	-	No	Time calculation characteristics selection. If activated, the operating time counter is continuing until a set release time has passed even if the pick-up element is reset.

Events and registers

The overvoltage function (abbreviated "OV" in event block names) generates events and registers from the status changes in the events listed below. The user can select which event messages are stored in the main event buffer: ON, OFF, or both. The events triggered by the function are recorded with a time stamp.

The function's outputs can be used for direct I/O controlling and user logic programming. The function also provides a resettable cumulative counter for the START, TRIP and BLOCKED events.

The function offers four (4) independent stages; the events are segregated for each stage operation.

Table. 5.4.11 - 113. Event messages.

Event block name	Event names
OV1...OV4	Start ON/OFF
OV1...OV4	Trip ON/OFF
OV1...OV4	Block ON/OFF

The function registers its operation into the last twelve (12) time-stamped registers; this information is available for all provided instances separately. The register of the function records the ON event process data for START, TRIP or BLOCKED. The table below presents the structure of the function's register content.

Table. 5.4.11 - 114. Register content.

Register	Description
Date and time	dd.mm.yyyy hh:mm:ss.mss
Event	Event name
Fault type	L1-G…L1-L2-L3
Pre-trigger voltage	Start/Trip -20ms voltage
Pre-fault voltage	Start -200ms voltage
Trip time remaining	0 ms...1800s
Used SG	Setting group 1...8 active

5.4.12 Undervoltage protection (U<; 27)

The undervoltage function is used for instant and time-delayed undervoltage protection. Devices with a voltage protection module has four (4) available stages of the function (U>, U>>, U>>>, U>>>>). The function constantly measures phase voltage magnitudes or line-to-line voltage magnitudes. Undervoltage protection has two blocking stages: internal blocking (based on voltage measurement and low voltage), or external blocking (e.g. during voltage transformer fuse failure).

Figure. 5.4.12 - 124. Simplified function block diagram of the U< function.

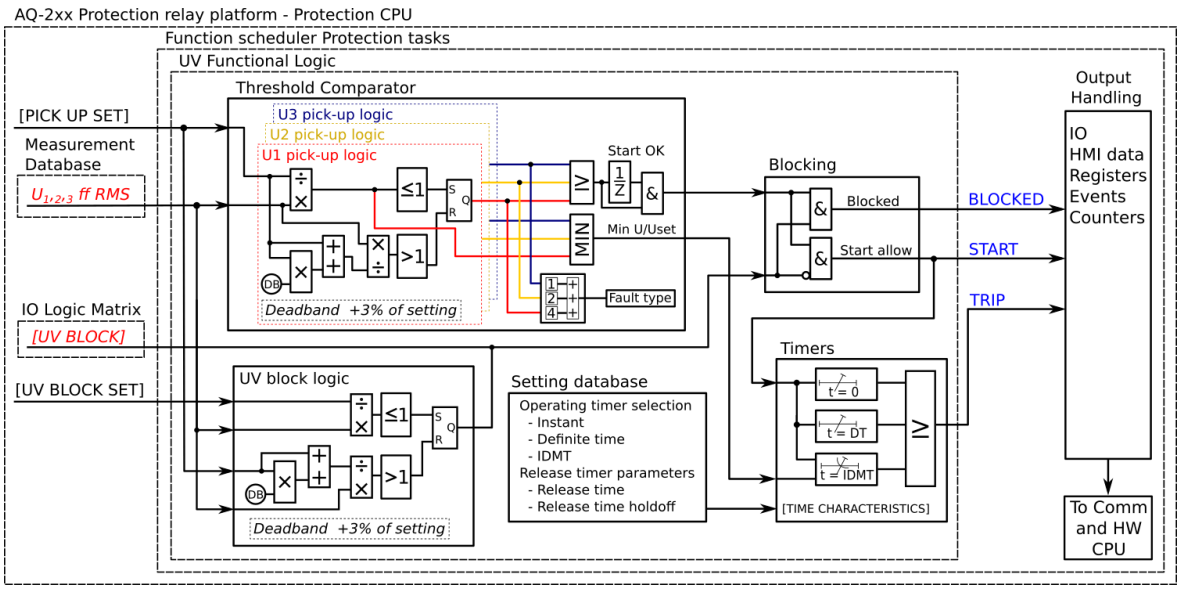

Measured input

The function block uses fundamental frequency component of line-to-line or line-to-neutral (as the user selects). If the protection is based on line-to-line voltage, undervoltage protection is not affected by earth faults in isolated or compensated networks.

© Arcteq Relays Ltd
IM00014

Table. 5.4.12 - 115. Measurement input of the U> function.

Signal	Description
U_{L12}RMS	Fundamental frequency component of U_{L12}/V voltage measurement
U_{L23}RMS	Fundamental frequency component of U_{L23}/V voltage measurement
U_{L31}RMS	Fundamental frequency component of U_{L31}/V voltage measurement
U_{L1}RMS	Fundamental frequency component of U_{L1}/V voltage measurement
U_{L2}RMS	Fundamental frequency component of U_{L2}/V voltage measurement
U_{L3}RMS	Fundamental frequency component of U_{L3}/V voltage measurement

Table. 5.4.12 - 116. Measured magnitude selection settings.

Name	Range	Default	Description
Measured magnitude	• P-P voltages • P-E voltages • U3 input (2LL-U3SS) • U4 input (SS)	P-P voltages	Selection of P-P or P-E voltages. Additionally, the U3 or U4 input can be assigned as the voltage channel to be supervised.

Figure. 5.4.12 - 125. Selectable measurement magnitudes with 3LN+U4 VT connection.

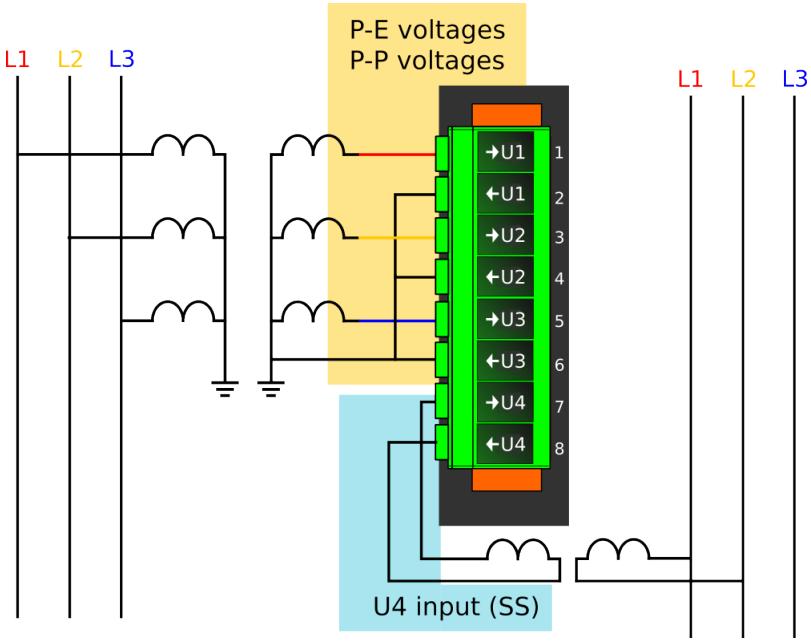

Figure. 5.4.12 - 126. Selectable measurement magnitudes with 3LL+U4 VT connection (P-E voltages not available without residual voltage).

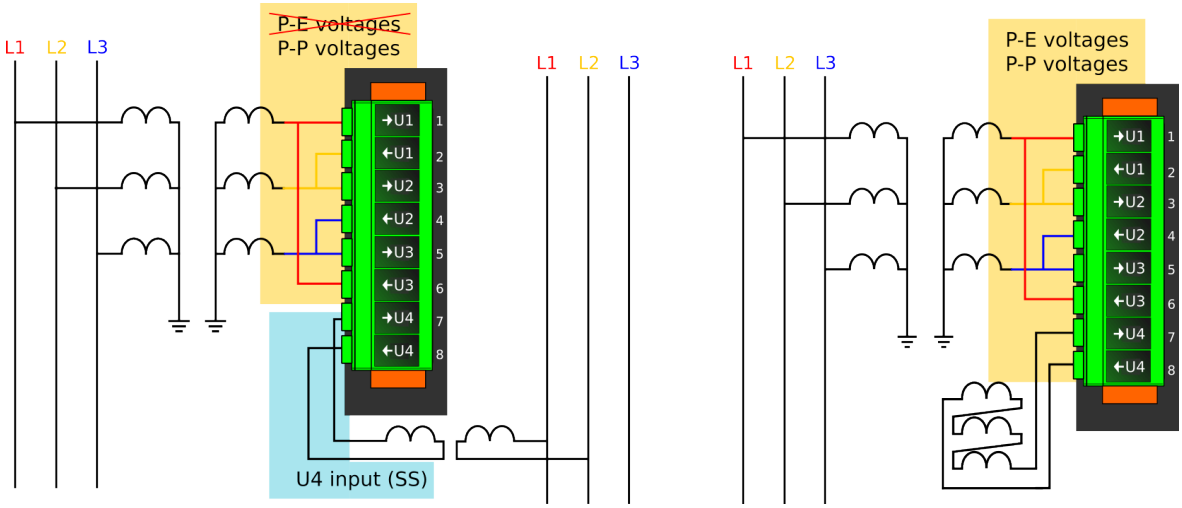

Figure. 5.4.12 - 127. Selectable measurement magnitudes with 2LL+U4 VT connection (P-E voltages not available without residual voltage).

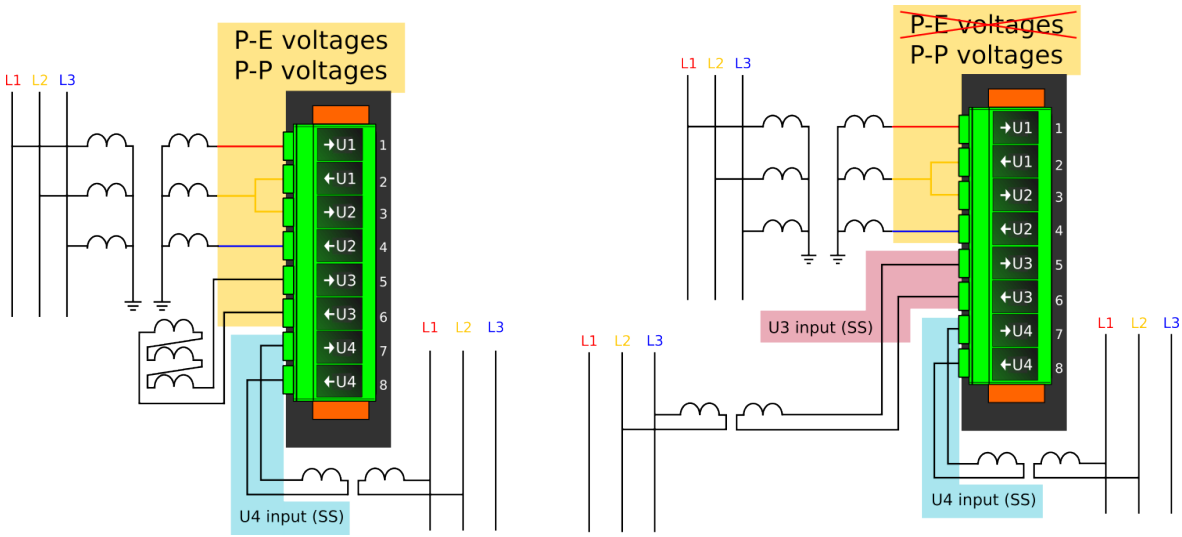

P-P Voltages and *P-E Voltages* selections follow phase-to-neutral or phase-to-phase voltages in the first three voltage channels (or two first voltage channels in the 2LL+U3+U4 mode). *U4 input* selection follows the voltage in Channel 4. *U3Input* selection only follows the voltage in Channel 3 if the 2LL+U3+U4 mode is in use.

General settings

The following general settings define the general behavior of the function. These settings are static i.e. it is not possible to change them by editing the setting group.

© Arcteq Relays Ltd
IM00014

Table. 5.4.12 - 117. General settings of the function.

Name	Range	Default	Description
U< force status to	• Normal • Start • Trip • Blocked	Normal	Force the status of the function. Visible only when *Enable stage forcing* parameter is enabled in *General* menu.

Pick-up settings

The U_{set} setting parameter controls the pick-up of the U< function. This defines the minimum allowed measured voltage before action from the function. The function constantly calculates the ratio between the U_{set} and the measured magnitude (U_m) for each of the three voltages. The reset ratio of 103 % is built into the function and is always relative to the U_{set} value. The setting value is common for all measured amplitudes, and when the U_m exceeds the U_{set} value (in single, dual or all voltages) it triggers the pick-up operation of the function.

Setting group selection controls the operating characteristics of the function, i.e. the user or user-defined logic can change function parameters while the function is running.

Table. 5.4.12 - 118. Pick-up settings.

Name	Range	Step	Default	Description
U_{set}	0.00…120.00%U_n	0.01%U_n	60%U_n	Pick-up setting
U Block setting	0.00…100.00%U_n	0.01%U_n	10%U_n	Block setting. If set to zero, blocking is not in use. The operation is explained in the next chapter.

Using *Block setting* to prevent nuisance trips

It is recommended to use the *Block setting* parameter to prevent the device from tripping in a situation where the network is de-energized. When the measured voltage drops below the set value, the device does not give a tripping signal. If the measured voltage has dropped below the *Block setting* parameter, the blocking continues until all of the line voltages have increased above the U< pick-up setting. Please see the image below for a visualization of this function. If the block level is set to zero (0), blocking is not in use.

Figure. 5.4.12 - 128. Example of the block setting operation.

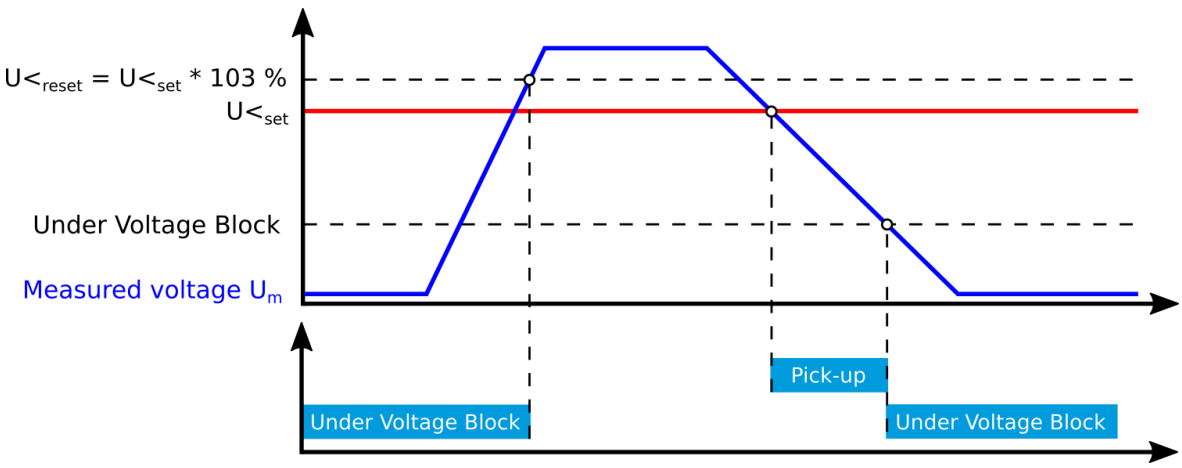

Read-only parameters

The function's *Info* page displays useful, real-time information on the state of the protection function. It is accessed either through the device's HMI display, or through the setting tool software when it is connected to the device and its Live Edit mode is active.

Table. 5.4.12 - 119. Information displayed by the function.

Name	Range	Step	Description
U< pick-up setting	0.0...1 000 000.0V	0.1V	The primary voltage required for tripping. The displayed pick-up voltage level depends on the pick-up setting and the voltage transformer settings.
U< block setting	0.0...1 000 000.0V	0.1V	The primary voltage level required for trip blocking. If the measured voltage is below this value, the network is considered de-energized and the function will not trip. To deactivate the blocking the measured voltage must exceed the pick-up setting value.
Expected operating time	0.000...1800.000s	0.005s	Displays the expected operating time when a fault occurs. When IDMT mode is used, the expected operating time depends on the measured voltage value. If the measured voltage changes during a fault, the expected operating time changes accordingly.
Time remaining to trip	-1800.000...1800.000s	0.005s	When the function has detected a fault and counts down time towards a trip, this displays how much time is left before tripping occurs.
$U_{A(B)\,meas}/U_{set}$ at the moment	0.00...1250.00U_m/U_{set}	0.01U_m/U_{set}	The ratio between U_A or U_{AB} voltage and the pick-up value.
$U_{B(c)\,meas}/U_{set}$ at the moment	0.00...1250.00U_m/U_{set}	0.01U_m/U_{set}	The ratio between U_B or U_{BC} voltage and the pick-up value.
$U_{C(A)\,meas}/U_{set}$ at the moment	0.00...1250.00U_m/U_{set}	0.01U_m/U_{set}	The ratio between U_C or U_{CA} voltage and the pick-up value.
U_{meas}/U_{set} at the moment	0.00...1250.00U_m/U_{set}	0.01U_m/U_{set}	The ratio between the lowest measured phase or line voltage and the pick-up value.

Function blocking

The blocking signal is evaluated at the start of each program cycle. The blocking signals are connected to the function's dedicated input, which can be configured in the *IO → Blocking Input Control* tab of the function.

- When the pick-up element activates and the blocking signal is not active, a START signal is generated, and the function starts or continues with the trip time countdown.
- When the pick-up element activates and the blocking signal is active, a BLOCKED signal is generated, and the function does not process the event further.

© Arcteq Relays Ltd
IM00014

- When a START signal is already active and the blocking input signal becomes active, the START signal is reset and BLOCKED signal is generated. The release time characteristics are then processed in the same way as when the pick-up signal is reset.

The blocking signal needs to reach the device minimum of 5 ms before the set operating delay has passed in order for the blocking to activate in time.

Operating time characteristics for trip and reset

The operating timers' behavior during a function can be set for TRIP signal and also for the release of the function in case the pick-up element is reset before the trip time has been reached. There are three basic operating modes available for the function:

- Instant operation: gives the TRIP signal with no additional time delay simultaneously with the START signal.
- Definite time operation (DT): gives the TRIP signal after a user-defined time delay regardless of the measured voltage as long as the voltage is above the U_{set} value and thus the pick-up element is active (independent time characteristics).
- Inverse definite minimum time (IDMT): gives the TRIP signal after a time which is in relation to the set pick-up voltage U_{set} and the measured voltage U_m (dependent time characteristics).

The IDMT function follows this formula:

$$t = \frac{k}{1 - \left(\frac{Um}{Us}\right)^{a}}$$

Where:

- t = operating time
- k = time dial setting
- U_m = measured voltage
- U_s = pick-up setting
- a = IDMT multiplier setting

The following table presents the setting parameters for the function's time characteristics.

Table. 5.4.12 - 120. Setting parameters for operating time characteristics.

Name	Range	Step	Default	Description
Delay type	• DT • IDMT	-	DT	Selection of the delay type time counter. The selection possibilities are dependent (IDMT, Inverse Definite Minimum Time) and independent (DT, Definite Time) characteristics.
Definite operating time delay	0.000…1800.000s	0.005s	0.040s	Definite time operating delay. This setting is active and visible when DT is the selected delay type. When set to 0.000 s, the stage operates as instant stage without added delay. When the parameter is set to 0.005...1800 s, the stage operates as independent delayed.
Time dial setting k	0.01…60.00s	0.01s	0.05s	This setting is active and visible when IDMT is the selected delay type. Time dial/multiplier setting for IDMT characteristics.

Name	Range	Step	Default	Description
IDMT Multiplier	0.01…25.00s	0.01s	1.00s	This setting is active and visible when IDMT is the selected delay type. IDMT time multiplier in the U_m/U_{set} power.

Table. 5.4.12 - 121. Setting parameters for reset time characteristics.

Name	Range	Step	Default	Description
Release time delay	0.000…150.000s	0.005s	0.06s	Resetting time. The time allowed between pick-ups if the pick-up has not led to a trip operation. During this time the START signal is held on for the timers if the delayed pick-up release is active.
Delayed pick-up release	• No • Yes	-	Yes	Resetting characteristics selection, either time-delayed or instant after the pick-up element is released. If activated, the START signal is reset after a set release time delay.
Time calc reset after release time	• No • Yes	-	Yes	Operating timer resetting characteristics selection. When actived, the operating time counter is reset after a set release time if the pick-up element is not activated during this time. When disabled, the operating time counter is reset directly after the pick-up element reset.
Continue time calculation during release time	• No • Yes	-	No	Time calculation characteristics selection. If activated, the operating time counter continues until a set release time even when the pick-up element is reset.

Events and registers

The undervoltage function (abbreviated "UV" in event block names) generates events and registers from the status changes in the events listed below. The user can select which event messages are stored in the main event buffer: ON, OFF, or both. The events triggered by the function are recorded with a time stamp.

The function's outputs can be used for direct I/O controlling and user logic programming. The function also provides a resettable cumulative counter for the START, TRIP and BLOCKED events.

The function offers four (4) independent stages; the events are segregated for each stage operation.

Table. 5.4.12 - 122. Event messages.

Event block name	Event names
UV1...UV4	Start ON/OFF
UV1...UV4	Trip ON/OFF
UV1...UV4	Block ON/OFF
UV1...UV4	Undervoltage Block ON/OFF

© Arcteq Relays Ltd
IM00014

The function registers its operation into the last twelve (12) time-stamped registers; this information is available for all provided instances separately. The register of the function records the ON event process data for START, TRIP or BLOCKED. The table below presents the structure of the function's register content.

Table. 5.4.12 - 123. Register content.

Register	Description
Date and time	dd.mm.yyyy hh:mm:ss.mss
Event	Event name
Fault type	A…A-B-C
Pre-trigger voltage	Start/Trip -20ms voltage
Fault voltage	Start/Trip voltage
Pre-fault voltage	Start -200ms voltage
Trip time remaining	0 ms...1800s
Used SG	Setting group 1...8 active

5.4.13 Neutral overvoltage protection (U0>; 59N)

The neutral overvoltage function is used for non-directional instant and time-delayed earth fault protection.

Below is the formula for symmetric component calculation (and therefore to zero sequence voltage calculation).

$$U0 = 1/3(U_{L1} + U_{L2} + U_{L3})$$

$$U_{L1...3} = \text{Line to neutral voltages}$$

Below are some examples of zero sequence calculation.

Figure. 5.4.13 - 129. Normal situation.

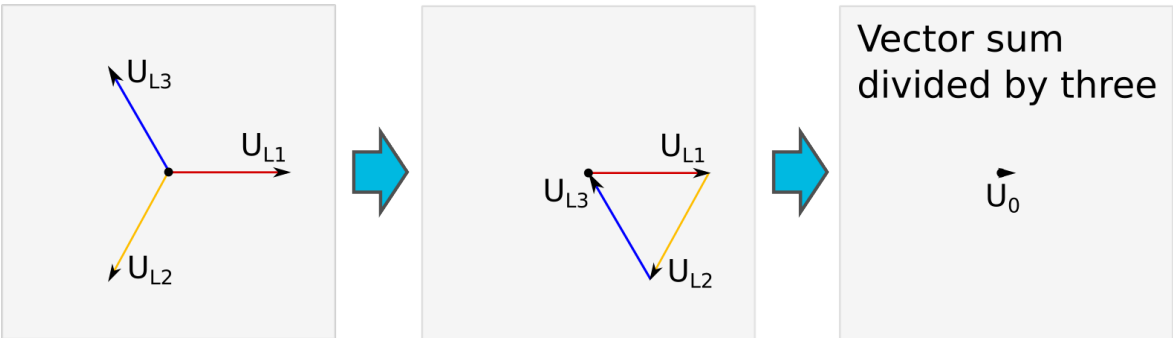

Figure. 5.4.13 - 130. Earth fault in isolated network.

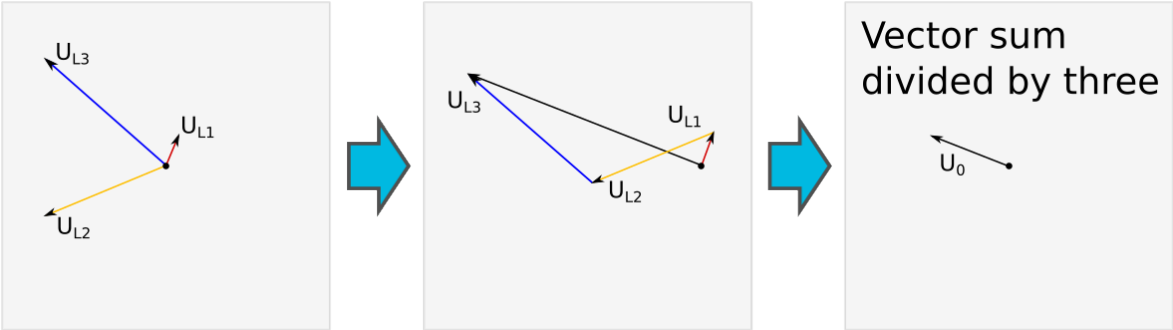

Figure. 5.4.13 - 131. Close-distance short-circuit between phases 1 and 3.

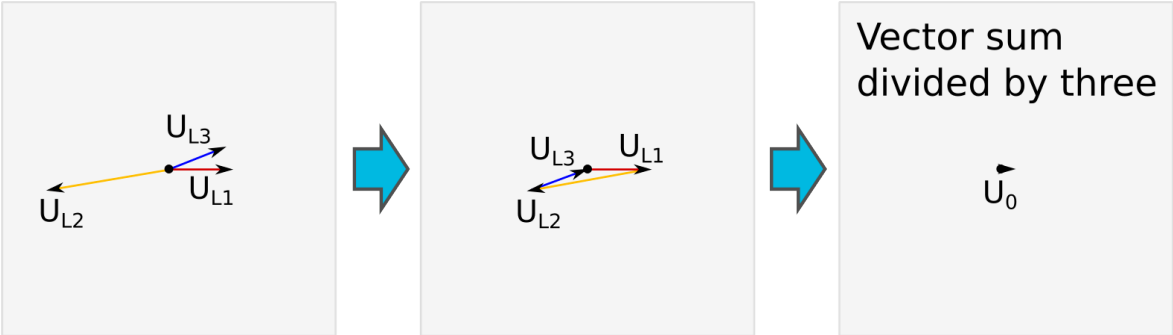

Figure. 5.4.13 - 132. Simplified function block diagram of the U0> function.

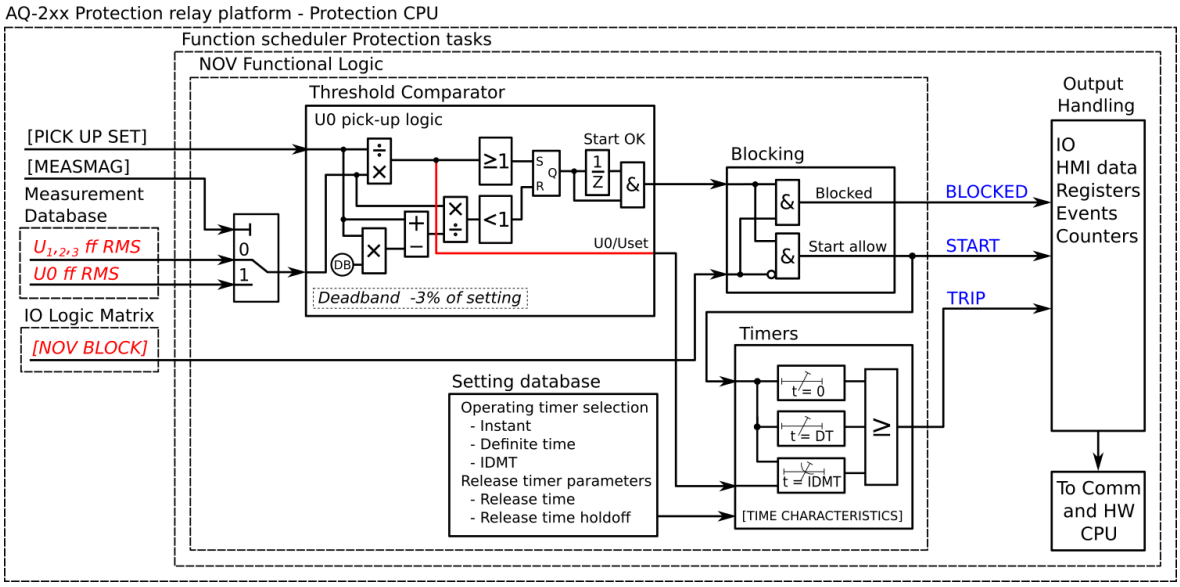

Measured input

The function block uses phase-to-neutral voltage magnitudes or calculated zero sequence component (as the user selects). Neutral overvoltage protection is scaled to line-to-line RMS level. When the line-to-line voltage of a system is 100 V in the secondary side, the earth fault is 100 % of the U_n and the calculated zero sequence voltage reaches 100/√3 V = 57.74 V.

The selection of the used measurement channel is made with a setting parameter.

© Arcteq Relays Ltd
IM00014

Table. 5.4.13 - 124. Measurement inputs of the U0> function.

Signal	Description
U_0RMS	Fundamental frequency component of U0/V voltage measurement
U_{L1}RMS	Fundamental frequency component of U_{L1}/V voltage measurement
U_{L2}RMS	Fundamental frequency component of U_{L2}/V voltage measurement
U_{L3}RMS	Fundamental frequency component of U_{L3}/V voltage measurement

General settings

The following general settings define the general behavior of the function. These settings are static i.e. it is not possible to change them by editing the setting group.

Table. 5.4.13 - 125. General settings of the function.

Name	Range	Default	Description
U0> force status to	• Normal • Start • Trip • Blocked	Normal	Force the status of the function. Visible only when *Enable stage forcing* parameter is enabled in *General* menu.
U0> meas input select	• Select • U0Calc • U3 Input • U4 Input	Select	Defines which available measured magnitude is used by the function. U0Calc calculates the voltage from phase voltages. Please note that U3 Input and U4 Input selections are available only if the channel has been set to U0 mode at *Measurements → Transformers → VT module*.

Pick-up settings

The U_{set} setting parameter controls the pick-up of the U0> function. This defines the maximum allowed measured voltage before action from the function. The function constantly calculates the ratio between the U_{set} and the measured magnitude (U_m) for neutral voltage. The reset ratio of 97 % is built into the function and is always relative to the U_{set} value. The setting value is common for all measured amplitudes, and when the U_m exceeds the U_{set} value it triggers the pick-up operation of the function.

Setting group selection controls the operating characteristics of the function, i.e. the user or user-defined logic can change function parameters while the function is running.

Table. 5.4.13 - 126. Pick-up settings.

Name	Range	Step	Default	Description
Pick-up setting U0set>	1.00…99.00%U_n	0.01%U_n	20.00%U_n	Pick-up setting

Read-only parameters

The function's *Info* page displays useful, real-time information on the state of the protection function. It is accessed either through the device's HMI display, or through the setting tool software when it is connected to the device and its Live Edit mode is active.

Name	Range	Step	Description
U0> Measuring now	• No U0 avail! • U0Calc • U3 Input • U4 Input	-	Displays which voltage channel is used by the function. If no voltage channel has been selected the function defaults to calculated residual voltage if line-to-neutral voltages have been connected to device. If no channel is set to "U0" mode and line-to-line voltages are connected, no residual voltage is available and "No U0 avail!" will be displayed.
U0> Pick-up setting	0.0...1 000 000.0V	0.1V	Primary voltage required for tripping. The displayed pick-up voltage level depends on the chosen U0 measurement input selection, on the pick-up settings and on the voltage transformer settings.
Expected operating time	0.000...1800.000s	0.005s	Displays the expected operating time when a fault occurs. When IDMT mode is used, the expected operating time depends on the measured voltage value. If the measured voltage changes during a fault, the expected operating time changes accordingly.
Time remaining to trip	-1800.000...1800.000s	0.005s	When the function has detected a fault and counts down time towards a trip, this displays how much time is left before tripping occurs.
U_{meas}/U_{set} at the moment	0.00...1250.00	0.01	The ratio between the measured or calculated neutral voltage and the pick-up value.

Function blocking

The blocking signal is evaluated at the start of each program cycle. The blocking signals are connected to the function's dedicated input, which can be configured in the *IO → Blocking Input Control* tab of the function.

- When the pick-up element activates and the blocking signal is not active, a START signal is generated, and the function starts or continues with the trip time countdown.
- When the pick-up element activates and the blocking signal is active, a BLOCKED signal is generated, and the function does not process the event further.
- When a START signal is already active and the blocking input signal becomes active, the START signal is reset and BLOCKED signal is generated. The release time characteristics are then processed in the same way as when the pick-up signal is reset.

The blocking signal needs to reach the device minimum of 5 ms before the set operating delay has passed in order for the blocking to activate in time.

Operating time characteristics for trip and reset

The operating timers' behavior during a function can be set for TRIP signal and also for the release of the function in case the pick-up element is reset before the trip time has been reached. There are three basic operating modes available for the function:

- Instant operation: gives the TRIP signal with no additional time delay simultaneously with the START signal.
- Definite time operation (DT): gives the TRIP signal after a user-defined time delay regardless of the measured or calculated voltage as long as the voltage is above the U_{set} value and thus the pick-up element is active (independent time characteristics).
- Inverse definite minimum time (IDMT): gives the TRIP signal after a time which is in relation to the set pick-up voltage U_{set} and the measured voltage U_m (dependent time characteristics).

The IDMT function follows this formula:

© Arcteq Relays Ltd
IM00014

$$t = \frac{k}{\left(\frac{Um}{Us}\right)^{a} - 1}$$

Where:

- t = operating time
- k = time dial setting
- U_m = measured voltage
- U_s = pick-up setting
- a = IDMT multiplier setting

The following table presents the setting parameters for the function's time characteristics.

Table. 5.4.13 - 127. Setting parameters for operating time characteristics.

Name	Range	Step	Default	Description
Delay type	DT IDMT	-	DT	Selection of the delay type time counter. The selection possibilities are dependent (IDMT, Inverse Definite Minimum Time) and independent (DT, Definite Time) characteristics.
Definite operating time delay	0.000…1800.000s	0.005s	0.040s	Definite time operating delay. The setting is active and visible when DT is the selected delay type. When set to 0.000 s, the stage operates as instant without added delay. When the parameter is set to 0.005...1800 s, the stage operates as independent delayed.
Time dial setting k	0.01…60.00s	0.01s	0.05s	The setting is active and visible when IDMT is the selected delay type. Time dial/multiplier setting for IDMT characteristics.
IDMT Multiplier	0.01…25.00s	0.01s	1.00s	The setting is active and visible when IDMT is the selected delay type. IDMT time multiplier in the U_m/U_{set} power.

Table. 5.4.13 - 128. Setting parameters for reset time characteristics.

Name	Range	Step	Default	Description
Release time delay	0.000…150.000s	0.005s	0.06s	Resetting time. Time allowed between pick-ups if the pick-up has not led to a trip operation. During this time the START signal is held on for the timers if the delayed pick-up release is active.
Delayed pick-up release	• No • Yes	-	Yes	Resetting characteristics selection either as time-delayed or as instant after the pick-up element is released. If activated, the START signal is reset after a set release time delay.
Time calc reset after release time	• No • Yes	-	Yes	Operating timer resetting characteristics selection. When active, the operating time counter is reset after a set release time if the pick-up element is not activated during this time. When disabled, the operating time counter is reset directly after the pick-up element reset.

Name	Range	Step	Default	Description
Continue time calculation during release time	• No • Yes	-	No	Time calculation characteristics selection. If activated, the operating time counter continues until a set release time has passed even if the pick-up element is reset.

The user can reset characteristics through the application. The default setting is a 60 ms delay; the time calculation is held during the release time.

In the release delay option the operating time counter calculates the operating time during the release. When using this option the function does not trip if the input signal is not re-activated while the release time count is on-going.

Events and registers

The neutral overvoltage function (abbreviated "NOV" in event block names) generates events and registers from the status changes in the events listed below. The user can select which event messages are stored in the main event buffer: ON, OFF, or both. The events triggered by the function are recorded with a time stamp.

The function's outputs can be used for direct I/O controlling and user logic programming. The function also provides a cumulative counter for the START, TRIP and BLOCKED events.

The function offers four (4) independent stages; the events are segregated for each stage operation.

Table. 5.4.13 - 129. Event messages.

Event block name	Event names
NOV1...NOV4	Start ON/OFF
NOV1...NOV4	Trip ON/OFF
NOV1...NOV4	Block ON/OFF

The function registers its operation into the last twelve (12) time-stamped registers; this information is available for all provided instances separately. The register of the function records the ON event process data for START, TRIP or BLOCKED. The table below presents the structure of the function's register content.

Table. 5.4.13 - 130. Register content.

Register	Description
Date and time	dd.mm.yyyy hh:mm:ss.mss
Event	Event name
Fault type	L1-G…L1-L2-L3
Pre-trigger voltage	Start/Trip -20ms voltage
Fault voltage	Start/Trip voltage
Pre-fault voltage	Start -200ms voltage

© Arcteq Relays Ltd
IM00014

Register	Description
Trip time remaining	0 ms...1800s
Setting group in use	Setting group 1...8 active

5.4.14 Sequence voltage protection (U1/U2>/<; 47/27P/59PN)

The sequence voltage function is used for instant and time-delayed voltage protection. It has positive and negative sequence protection for both overvoltage and undervoltage (the user selects the needed function). The user can select the voltage used. Sequence voltage is based on the system's line-to-line voltage level. Protection stages can be set to protect against either undervoltage or overvoltage.

Positive sequence voltage calculation

Below is the formula for symmetric component calculation (and therefore to positive sequence voltage calculation).

$$U1 = {}^{1}/_{3}\,(U_{L1} + aU_{L2} + a^2U_{L3})$$

$$a = 1\angle 120°$$

$$a^2 = 1\angle 240°$$

$$U_{L1...3} = Line\ to\ neutral\ voltages$$

In what follows are three examples of positive sequence calculation (positive sequence component vector).

Figure. 5.4.14 - 133. Normal situation.

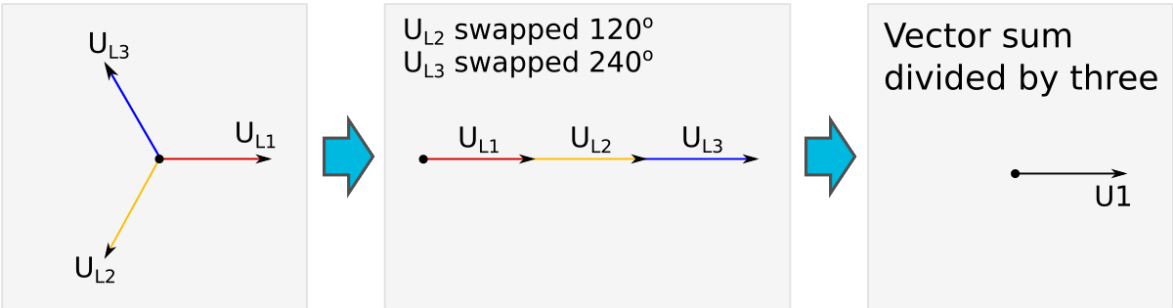

Figure. 5.4.14 - 134. Earth fault in an isolated network.

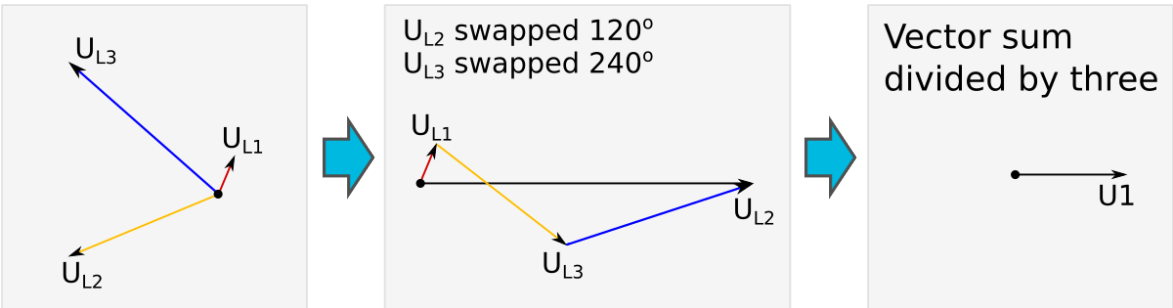

Figure. 5.4.14 - 135. Close-distance short-circuit between phases 1 and 3.

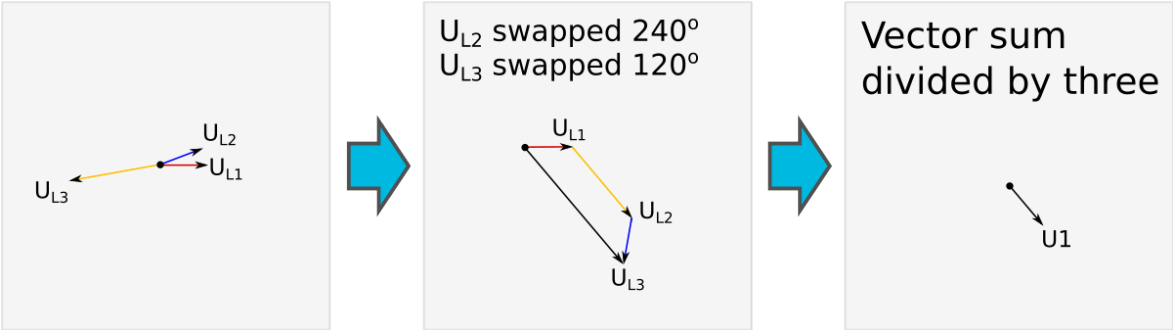

Negative sequence voltage calculation

Below is the formula for symmetric component calculation (and therefore to negative sequence voltage calculation).

$$U2 = {}^{1}/_{3}\,(U_{L1} + a^2 U_{L2} + a U_{L3})$$

$$a = 1\angle 120°$$

$$a^2 = 1\angle 240°$$

$$U_{L1\ldots3} = Line\ to\ neutral\ voltages$$

In what follows are three examples of negative sequence calculation (negative sequence component vector).

Figure. 5.4.14 - 136. Normal situation.

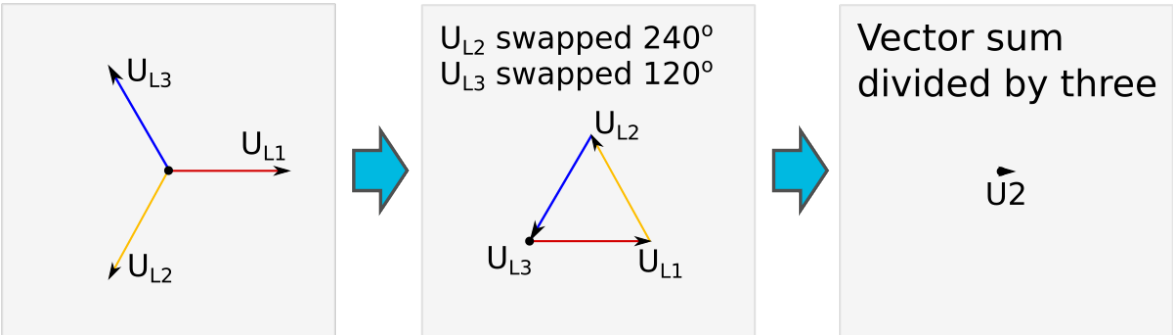

Figure. 5.4.14 - 137. Earth fault in isolated network.

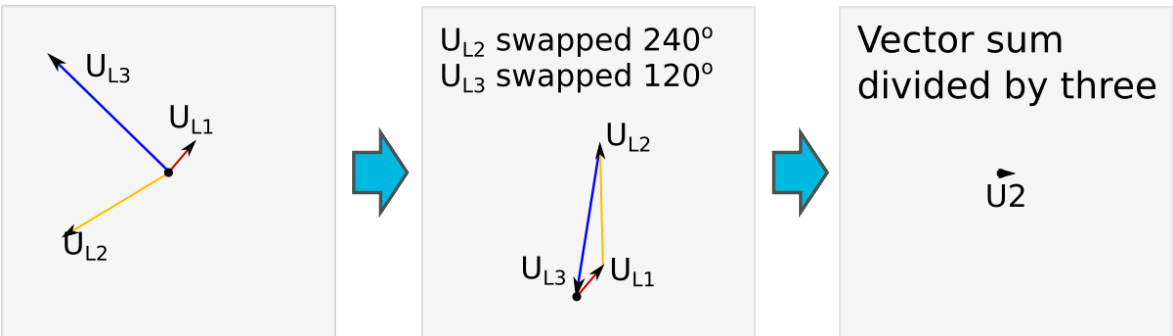

© Arcteq Relays Ltd
IM00014

Figure. 5.4.14 - 138. Close-distance short-circuit between phases 1 and 3.

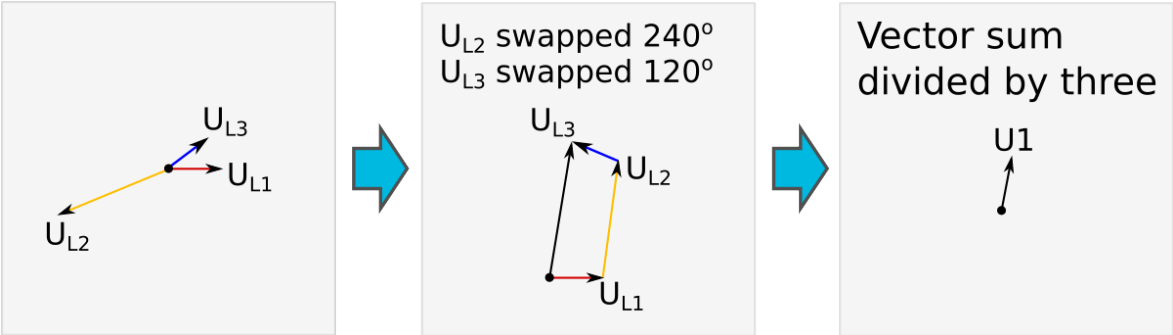

Figure. 5.4.14 - 139. Simplified function block diagram of the U1/U2>/< function.

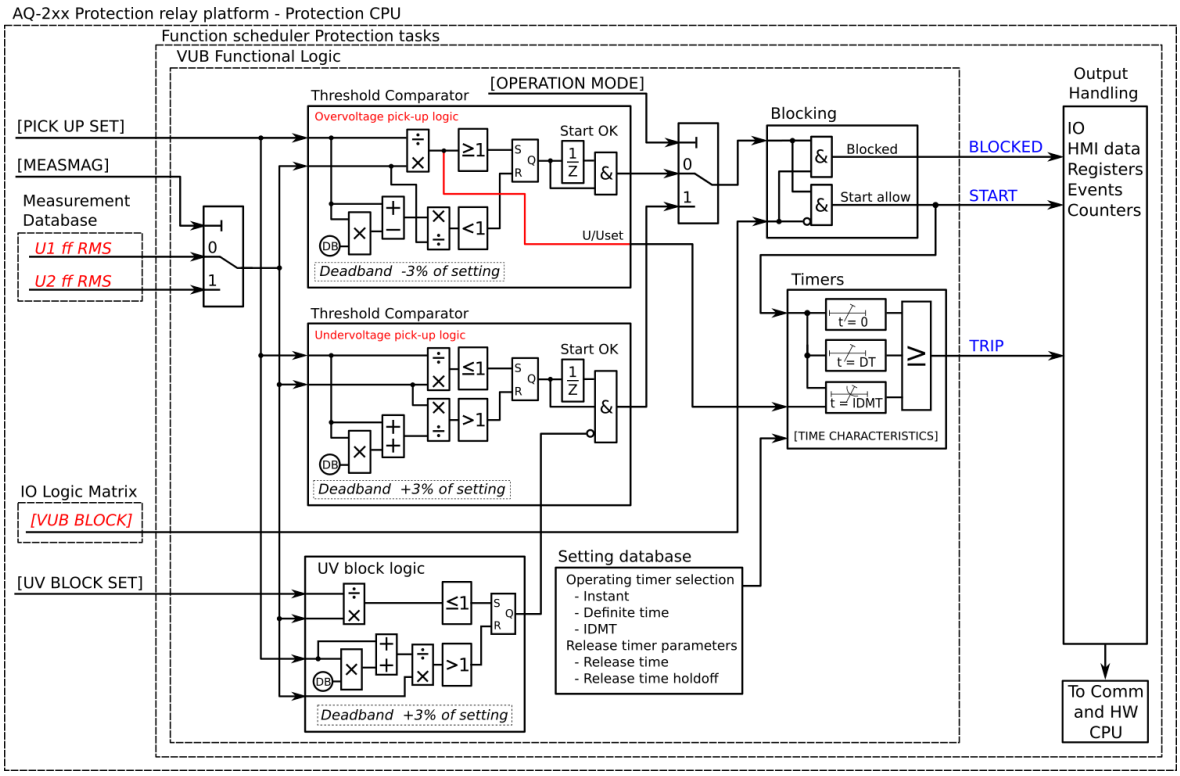

Measured input

The function block uses fundamental frequency component of phase-to-phase, phase-to-neutral and zero sequence voltage measurements. The user can select the monitored magnitude to be either positive sequence voltage or negative sequence voltage values.

Table. 5.4.14 - 131. Measurement inputs of the U1/U2>/< function.

Signal	Description
U_1RMS	Fundamental frequency component of U_1/V voltage channel
U_2RMS	Fundamental frequency component of U_2/V voltage channel
U_3RMS	Fundamental frequency component of U_3/V voltage channel
U_4RMS	Fundamental frequency component of U_4/V voltage channel

General settings

The following general settings define the general behavior of the function. These settings are static i.e. it is not possible to change them by editing the setting group.

Table. 5.4.14 - 132. General settings of the function.

Name	Range	Default	Description
U1/2 >/< force status to	• Normal • Start • Trip • Blocked	Normal	Force the status of the function. Visible only when *Enable stage forcing* parameter is enabled in *General* menu.
Measured magnitude	• U1 Positive sequence voltage • U2 Negative sequence voltage	U1 Positive sequence voltage	Selects which calculated voltage is supervised.

Pick-up settings

The U_{set} setting parameter controls the pick-up of the U1/U2>/< function. This defines the maximum or minimum allowed calculated U1 or U2 voltage before action from the function. The function constantly calculates the ratio between the U_{set} and the calculated U1 or U2 magnitude (U_C). The monitored voltage is chosen in the *Info* page with the parameter *Measured magnitude*. The reset ratio of 97 % in overvoltage applications is built into the function and is always relative to the U_{set} value. The reset ratio of 103 % in undervoltage applications is built into the function and is always relative to the U_{set} value. When the U_C goes above or below the U_{set} value it triggers the pick-up operation of the function.

Setting group selection controls the operating characteristics of the function, i.e. the user or user-defined logic can change function parameters while the function is running.

Table. 5.4.14 - 133. Pick-up settings.

Name	Range	Step	Default	Description
Pick-up terms	• Over > • Under<	-	Over>	Selects whether the function picks-up when the monitored voltage is under or over the set pick-up value.
U_{set}	5.00…150.00%U_n	0.01%U_n	105%U_n	Pick-up setting
U_{blk}	0.00…80.00%U_n	0.01%U_n	5%U_n	Undervoltage blocking (visible when the pick-up term is Under<)

Using *Block setting* to prevent nuisance trips

It is recommended to use the *Under block setting* U_{blk} parameter when Under< is the chosen tripping condition to prevent the function from tripping in a situation where the network is de-energized. When the measured voltage drops below the set value, the function does not give a tripping signal. If the measured voltage has dropped below the *Under block setting* U_{blk} parameter, the blocking continues until all of the line voltages have increased above the U< pick-up setting. Please see the image below for a visualization of this function. If the block level is set to zero (0), blocking is not in use.

© Arcteq Relays Ltd
IM00014

Figure. 5.4.14 - 140. Example of the block setting operation.

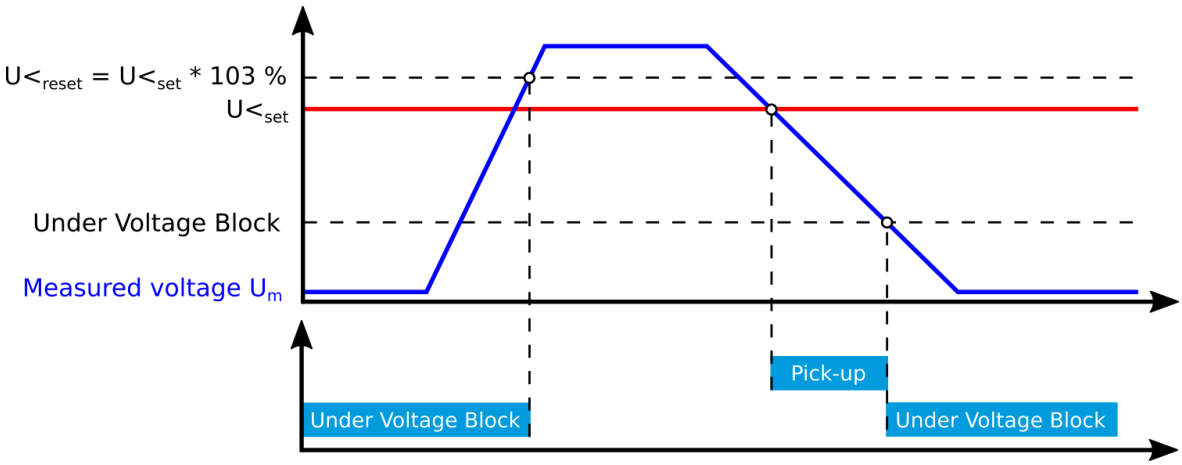

Read-only parameters

The function's *Info* page displays useful, real-time information on the state of the protection function. It is accessed either through the device's HMI display, or through the setting tool software when it is connected to the device and its Live Edit mode is active.

Table. 5.4.14 - 134. Information displayed by the function.

Name	Range	Step	Description
U1/2 >/< Pick-up setting	0.0...1 000 000.0V	0.1V	The primary voltage required for tripping. The displayed pick-up voltage level depends on the pick-up setting and the voltage transformer settings.
Expected operating time	0.000...1800.000s	0.005s	Displays the expected operating time when a fault occurs. When IDMT mode is used, the expected operating time depends on the measured voltage value. If the measured voltage changes during a fault, the expected operating time changes accordingly.
Time remaining to trip	-1800.000...1800.000s	0.005s	When the function has detected a fault and counts down time towards a trip, this displays how much time is left before tripping occurs.
U_{meas}/U_{set} at the moment	0.00...1250.00U_m/U_{set}	0.01U_m/U_{set}	The ratio between the measured voltage and the pick-up value.

Function blocking

The blocking signal is evaluated at the start of each program cycle. The blocking signals are connected to the function's dedicated input, which can be configured in the *IO → Blocking Input Control* tab of the function.

- When the pick-up element activates and the blocking signal is not active, a START signal is generated, and the function starts or continues with the trip time countdown.
- When the pick-up element activates and the blocking signal is active, a BLOCKED signal is generated, and the function does not process the event further.
- When a START signal is already active and the blocking input signal becomes active, the START signal is reset and BLOCKED signal is generated. The release time characteristics are then processed in the same way as when the pick-up signal is reset.

The blocking signal needs to reach the device minimum of 5 ms before the set operating delay has passed in order for the blocking to activate in time.

Operating time characteristics for trip and reset

The operating timers' behavior during a function can be set for TRIP signal and also for the release of the function in case the pick-up element is reset before the trip time has been reached. There are three basic operating modes available for the function:

- Instant operation: gives the TRIP signal with no additional time delay simultaneously with the START signal.
- Definite time operation (DT): gives the TRIP signal after a user-defined time delay regardless of the measured or calculated voltage as long as the voltage is above the U_{set} value and thus the pick-up element is active (independent time characteristics).
- Inverse definite minimum time (IDMT): gives the TRIP signal after a time which is in relation to the set pick-up voltage U_{set} and the measured voltage U_m (dependent time characteristics).

The IDMT function follows one of the following formulas:

Overvoltage

$$t = \frac{k}{\left(\frac{Um}{Us}\right)^a - 1}$$

Undervoltage

$$t = \frac{k}{1 - \left(\frac{Um}{Us}\right)^a}$$

Where:

- t = operating time
- k = time dial setting
- U_m = measured voltage
- U_s = pick-up setting
- a = IDMT multiplier setting

The following table presents the setting parameters for the function's time characteristics.

Table. 5.4.14 - 135. Setting parameters for operating time characteristics.

Name	Range	Step	Default	Description
Delay type	• DT • IDMT	-	DT	Selection of the delay type time counter. The selection possibilities are dependent (IDMT, Inverse Definite Minimum Time) and independent (DT, Definite Time) characteristics.
Definite operating time delay	0.000…1800.000s	0.005s	0.040s	Definite time operating delay. The setting is active and visible when DT is the selected delay type. When set to 0.000 s, the stage operates as instant without added delay. When the parameter is set to 0.005...1800 s, the stage operates as independent delayed.
Time dial setting k	0.01…60.00s	0.01s	0.05s	The setting is active and visible when IDMT is the selected delay type. Time dial/multiplier setting for IDMT characteristics.
IDMT Multiplier	0.01…25.00s	0.01s	1.00s	The setting is active and visible when IDMT is the selected delay type. IDMT time multiplier in the U_m/U_{set} power.

© Arcteq Relays Ltd
IM00014

Table. 5.4.14 - 136. Setting parameters for reset time characteristics.

Name	Range	Step	Default	Description
Release time delay	0.000…150.000s	0.005s	0.06s	Resetting time. Time allowed between pick-ups if the pick-up has not led to a trip operation. During this time the START signal is held on for the timers if the delayed pick-up release is active.
Delayed pick-up release	• No • Yes	-	Yes	Resetting characteristics selection either as time-delayed or as instant after the pick-up element is released. If activated, the START signal is reset after a set release time delay.
Time calc reset after release time	• No • Yes	-	Yes	Operating timer resetting characteristics selection. When active, the operating time counter is reset after a set release time if the pick-up element is not activated during this time. When disabled, the operating time counter is reset directly after the pick-up element reset.
Continue time calculation during release time	• No • Yes	-	No	Time calculation characteristics selection. If activated, the operating time counter continues until a set release time has passed even if the pick-up element is reset.

The user can reset characteristics through the application. The default setting is a 60 ms delay; the time calculation is held during the release time.

In the release delay option the operating time counter calculates the operating time during the release. When using this option the function does not trip if the input signal is not re-activated while the release time count is on-going.

Events and registers

The sequence voltage function (abbreviated "VUB" in event block names) generates events and registers from the status changes in the events listed below. The user can select which event messages are stored in the main event buffer: ON, OFF, or both. The events triggered by the function are recorded with a time stamp.

The function's outputs can be used for direct I/O controlling and user logic programming. The function also a resettable cumulative counter for the START, TRIP and BLOCKED events.

The function offers four (4) independent stages; the events are segregated for each stage operation.

Table. 5.4.14 - 137. Event messages.

Event block name	Event names
VUB1...VUB4	Start ON/OFF
VUB1...VUB4	Trip ON/OFF
VUB1...VUB4	Block ON/OFF

The function registers its operation into the last twelve (12) time-stamped registers; this information is available for all provided instances separately. The register of the function records the ON event process data for START, TRIP or BLOCKED. The table below presents the structure of the function's register content.

Table. 5.4.14 - 138. Register content.

Register	Description
Date and time	dd.mm.yyyy hh:mm:ss.mss
Event	Event name
Pre-trigger voltage	Start/Trip -20ms voltage
Fault voltage	Start/Trip voltage
Pre-fault voltage	Start -200ms voltage
Trip time remaining	0 ms...1800s
Setting group in use	Setting group 1...8 active

5.4.15 Overpower protection (P>; 32O)

The overpower function is used for instant and time-delayed active over-power protection. In applications like feeder, generator and motor protection this function is used to detect overload situations by measuring three-phase active power.

Figure. 5.4.15 - 141. Operating characteristics of overpower protection.

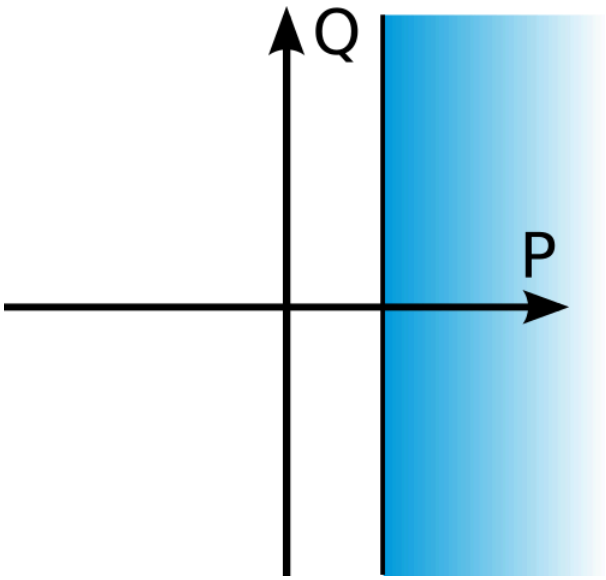

© Arcteq Relays Ltd
IM00014

Figure. 5.4.15 - 142. Simplified function block diagram of the P> function.

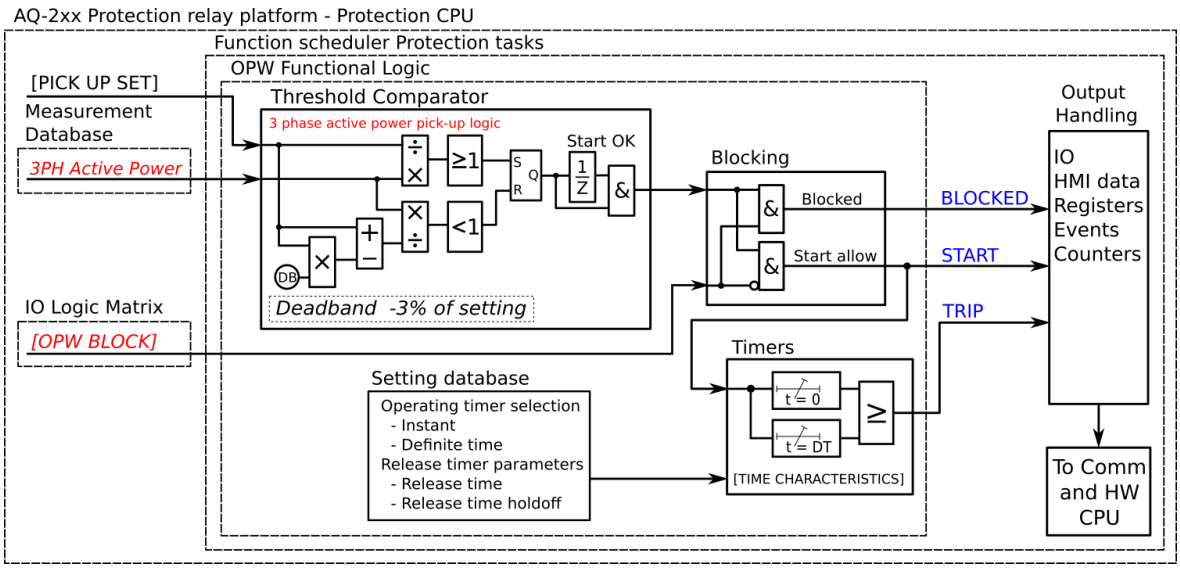

Measured input

The function block uses three phase currents and line-to-neutral or line-to-line voltages to calculate active power. Please refer to "Power and energy calculation" chapter for a detailed description of power calculation.

Table. 5.4.15 - 139. Measurement inputs of the P> function.

Signal	Description
I_{L1}RMS	Fundamental frequency component of phase L1 (A) current measurement
I_{L2}RMS	Fundamental frequency component of phase L2 (B) current measurement
I_{L3}RMS	Fundamental frequency component of phase L3 (C) current measurement
U_1RMS	Fundamental frequency component of U_1/V voltage measurement
U_2RMS	Fundamental frequency component of U_2/V voltage measurement
U_3RMS	Fundamental frequency component of U_3/V voltage measurement
U_4RMS	Fundamental frequency component of U_4/V voltage measurement

General settings

The following general settings define the general behavior of the function. These settings are static i.e. it is not possible to change them by editing the setting group.

Table. 5.4.15 - 140. General settings of the function.

Name	Range	Default	Description
P> force status to	• Normal • Start • Trip • Blocked	Normal	Force the status of the function. Visible only when *Enable stage forcing* parameter is enabled in *General* menu.

Pick-up settings

The P_{set}>setting parameter controls the pick-up of the P> function. This defines the maximum allowed measured three-phase active power before action from the function. The function constantly calculates the ratio between the P_{set}>and the measured magnitude (P_m). The reset ratio of 97 % is built into the function and is always relative to the P_{set}>value.

Setting group selection controls the operating characteristics of the function, i.e. the user or user-defined logic can change function parameters while the function is running.

Table. 5.4.15 - 141. Pick-up settings.

Name	Range	Step	Default	Description
P_{set}>	0.0…100 000kW	0.01kW	100kW	Pick-up setting

Read-only parameters

The function's *Info* page displays useful, real-time information on the state of the protection function. It is accessed either through the device's HMI display, or through the setting tool software when it is connected to the device and its Live Edit mode is active.

Table. 5.4.15 - 142. Information displayed by the function.

Name	Range	Step	Description
P> condition	• Normal • Start • Trip • Blocked	-	Displays the status of the protection function.
Expected operating time	0.000...1800.000s	0.005s	Displays the expected operating time when a fault occurs.
Time remaining to trip	-1800.000...1800.000s	0.005s	When the function has detected a fault and counts down time towards a trip, this displays how much time is left before tripping occurs.
P meas/P set at the moment	1250.00P_m/P_{set}	0.01P_m/P_{set}	The ratio between the measured power and the pick-up value.

Function blocking

The blocking signal is evaluated at the start of each program cycle. The blocking signals are connected to the function's dedicated input, which can be configured in the *IO → Blocking Input Control* tab of the function.

- When the pick-up element activates and the blocking signal is not active, a START signal is generated, and the function starts or continues with the trip time countdown.
- When the pick-up element activates and the blocking signal is active, a BLOCKED signal is generated, and the function does not process the event further.
- When a START signal is already active and the blocking input signal becomes active, the START signal is reset and BLOCKED signal is generated. The release time characteristics are then processed in the same way as when the pick-up signal is reset.

© Arcteq Relays Ltd
IM00014

The blocking signal needs to reach the device minimum of 5 ms before the set operating delay has passed in order for the blocking to activate in time.

Operating time characteristics for trip and reset

This function supports definite time delay (DT). For detailed information on these delay types please refer to the chapter "General properties of a protection function" and its section "Operating time characteristics".

Events and registers

The overpower function (abbreviated "OPW" in event block names) generates events and registers from the status changes in the events listed below. The user can select which event messages are stored in the main event buffer: ON, OFF, or both. The events triggered by the function are recorded with a time stamp.

The function's outputs can be used for direct I/O controlling and user logic programming. The function also provides a resettable cumulative counter for the START, TRIP and BLOCKED events.

The function offers one (1) independent stage.

Table. 5.4.15 - 143. Event messages.

Event block name	Event names
OPW1	Start ON/OFF
OPW1	Trip ON/OFF
OPW1	Block ON/OFF

The function registers its operation into the last twelve (12) time-stamped registers. The register of the function records the ON event process data for START, TRIP or BLOCKED. The table below presents the structure of the function's register content.

Table. 5.4.15 - 144. Register content.

Register	Description
Date and time	dd.mm.yyyy hh:mm:ss.mss
Event	Event name
Pre-trigger power	Start/Trip -20ms power
Fault power	Start/Trip power
Pre-fault power	Start -200ms power
Trip time remaining	0 ms...1800s
Setting group in use	Setting group 1...8 active

5.4.16 Underpower protection (P<; 32U)

The underpower function is used for instant and time-delayed active underpower protection. This function is used to detect loss of load conditions when there is no significant loss of current.

Figure. 5.4.16 - 143. Operating characteristics of underpower protection.

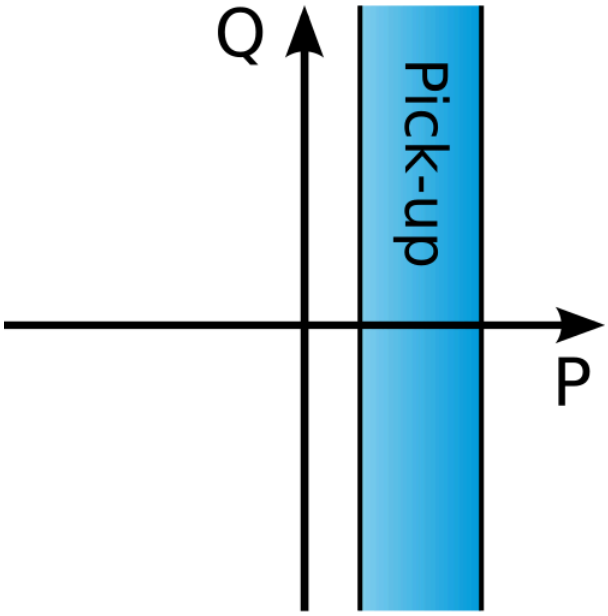

Figure. 5.4.16 - 144. Simplified function block diagram of the P< function.

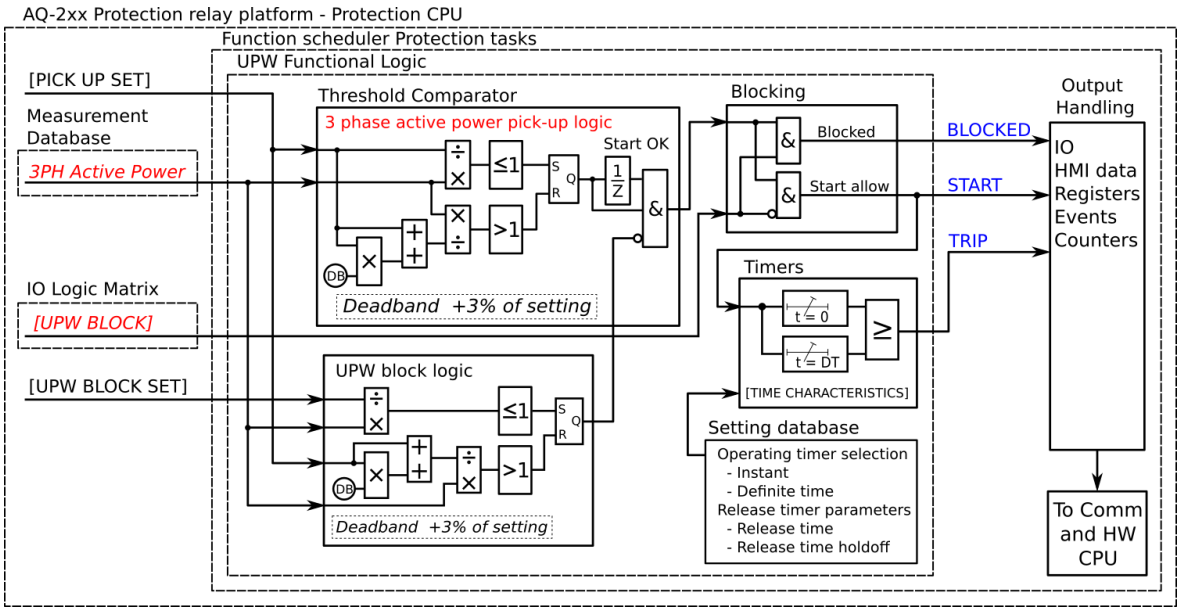

Measured input

The function block uses three phase currents and line-to-neutral or line-to-line voltages to calculate active power. Please refer to "Power and energy calculation" chapter for a detailed description of power calculation.

Table. 5.4.16 - 145. Measurement inputs of the P< function.

Signal	Description
I_{L1}RMS	Fundamental frequency component of phase L1 (A) current measurement
I_{L2}RMS	Fundamental frequency component of phase L2 (B) current measurement

© Arcteq Relays Ltd
IM00014

Signal	Description
I_{L3}RMS	Fundamental frequency component of phase L3 (C) current measurement
U_1RMS	Fundamental frequency component of U_1/V voltage measurement
U_2RMS	Fundamental frequency component of U_2/V voltage measurement
U_3RMS	Fundamental frequency component of U_3/V voltage measurement
U_4RMS	Fundamental frequency component of U_4/V voltage measurement

General settings

The following general settings define the general behavior of the function. These settings are static i.e. it is not possible to change them by editing the setting group.

Table. 5.4.16 - 146. General settings of the function.

Name	Range	Default	Description
P< force status to	• Normal • Start • Trip • Blocked	Normal	Force the status of the function. Visible only when *Enable stage forcing* parameter is enabled in *General* menu.

Pick-up settings

The P_{set}< setting parameter controls the pick-up of the P< function. This defines the maximum allowed measured three-phase active power before action from the function. The function constantly calculates the ratio between the P_{set}< and the measured magnitude (P_m). The reset ratio of 103 % is built into the function and is always relative to the P_{set}< value.

Figure. 5.4.16 - 145. Activation and deactivation characteristics of low power blocking.

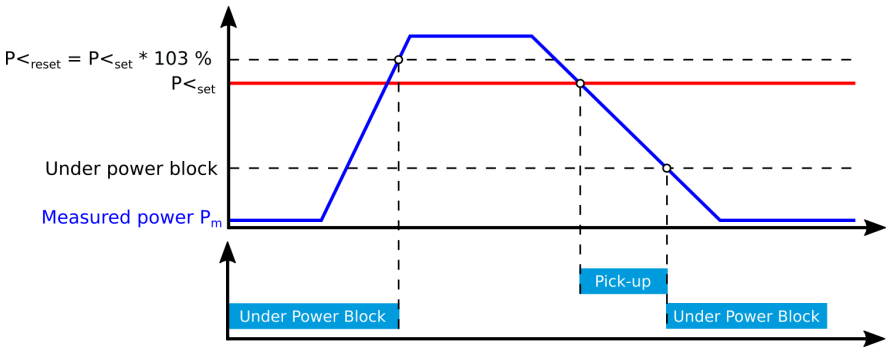

The *Low power block* setting parameter can be used to prevent an accidental trip before active power exceeds the pick-up setting. The LPB signal is deactivated when the measured active power exceeds the pick-up settings reset value (= 1.03 x P_{set}).

Setting group selection controls the operating characteristics of the function, i.e. the user or user-defined logic can change function parameters while the function is running.

Table. 5.4.16 - 147. Pick-up settings.

Name	Range	Step	Default	Description
P_{set}<	0.0…100 000kW	0.01kW	100kW	Pick-up setting
P_{set}<	0.0…100 000kW	0.01kW	50kW	Low power block

Read-only parameters

The function's *Info* page displays useful, real-time information on the state of the protection function. It is accessed either through the device's HMI display, or through the setting tool software when it is connected to the device and its Live Edit mode is active.

Table. 5.4.16 - 148. Information displayed by the function.

Name	Range	Step	Description
P< condition	• Normal • Start • Trip • Blocked	-	Displays the status of the protection function.
Expected operating time	0.000...1800.000s	0.005s	Displays the expected operating time when a fault occurs.
Time remaining to trip	-1800.000...1800.000s	0.005s	When the function has detected a fault and counts down time towards a trip, this displays how much time is left before tripping occurs.
P meas/P set at the moment	1250.00P_m/P_{set}	0.01P_m/P_{set}	The ratio between the measured power and the pick-up value.

Function blocking

The blocking signal is evaluated at the start of each program cycle. The blocking signals are connected to the function's dedicated input, which can be configured in the *IO → Blocking Input Control* tab of the function.

- When the pick-up element activates and the blocking signal is not active, a START signal is generated, and the function starts or continues with the trip time countdown.
- When the pick-up element activates and the blocking signal is active, a BLOCKED signal is generated, and the function does not process the event further.
- When a START signal is already active and the blocking input signal becomes active, the START signal is reset and BLOCKED signal is generated. The release time characteristics are then processed in the same way as when the pick-up signal is reset.

The blocking signal needs to reach the device minimum of 5 ms before the set operating delay has passed in order for the blocking to activate in time.

Operating time characteristics for trip and reset

This function supports definite time delay (DT). For detailed information on these delay types please refer to the chapter "General properties of a protection function" and its section "Operating time characteristics".

© Arcteq Relays Ltd
IM00014

Events and registers

The underpower function (abbreviated "UPW" in event block names) generates events and registers from the status changes in the events listed below. The user can select which event messages are stored in the main event buffer: ON, OFF, or both. The events triggered by the function are recorded with a time stamp.

The function's outputs can be used for direct I/O controlling and user logic programming. The function also provides a resettable cumulative counter for the START, TRIP and BLOCKED events.

The function offers one (1) independent stage.

Table. 5.4.16 - 149. Event messages.

Event block name	Event names
UPW1	Start ON/OFF
UPW1	Trip ON/OFF
UPW1	Block ON/OFF

The function registers its operation into the last twelve (12) time-stamped registers. The register of the function records the ON event process data for START, TRIP or BLOCKED. The table below presents the structure of the function's register content.

Table. 5.4.16 - 150. Register content.

Register	Description
Date and time	dd.mm.yyyy hh:mm:ss.mss
Event	Event name
Pre-trigger power	Start/Trip -20ms power
Fault power	Start/Trip power
Pre-fault power	Start -200ms power
Trip time remaining	0 ms...1800s
Setting group in use	Setting group 1...8 active

5.4.17 Reverse power protection (Pr; 32R)

The reverse power function is used for instant and time-delayed active reverse power protection. In generator protection applications the reverse power protection function is used to prevent damage in situations where a synchronous generator is running like a motor when the generator draws active power. Reverse power protection is not used to protect the generator itself but to protect the generator's turbine.

Figure. 5.4.17 - 146. Operating characteristics of reverse power protection.

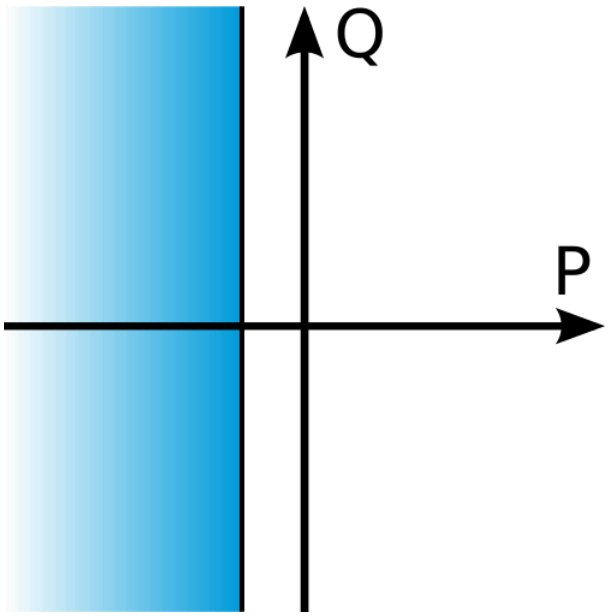

Figure. 5.4.17 - 147. Simplified function block diagram of the Pr function.

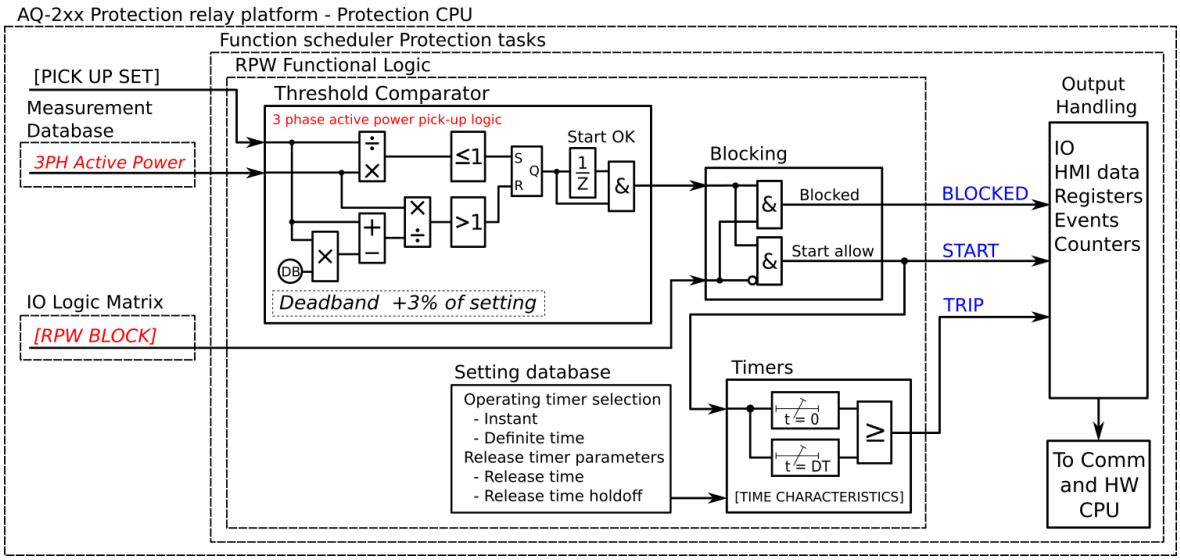

Measured input

The function block uses three phase currents and line-to-neutral or line-to-line voltages to calculate active power. Please refer to "Power and energy calculation" chapter for a detailed description of power calculation.

Table. 5.4.17 - 151. Measurement inputs of the Prev> function.

Signal	Description
I_{L1}RMS	Fundamental frequency component of phase L1 (A) current measurement
I_{L2}RMS	Fundamental frequency component of phase L2 (B) current measurement
I_{L3}RMS	Fundamental frequency component of phase L3 (C) current measurement

© Arcteq Relays Ltd
IM00014

Signal	Description
U_1RMS	Fundamental frequency component of U_1/V voltage measurement
U_2RMS	Fundamental frequency component of U_2/V voltage measurement
U_3RMS	Fundamental frequency component of U_3/V voltage measurement
U_4RMS	Fundamental frequency component of U_4/V voltage measurement

General settings

The following general settings define the general behavior of the function. These settings are static i.e. it is not possible to change them by editing the setting group.

Table. 5.4.17 - 152. General settings of the function.

Name	Range	Default	Description
Prev> force status to	• Normal • Start • Trip • Blocked	Normal	Force the status of the function. Visible only when *Enable stage forcing* parameter is enabled in *General* menu.

Pick-up settings

The P_{set} *rev.*setting parameter controls the pick-up of the Pr function. This defines the maximum allowed measured three-phase active power before action from the function. The function constantly calculates the ratio between the P_{set} *rev.* and the measured magnitude (P_m). The reset ratio of 97 % is built into the function and is always relative to the P_{set} *rev.* value.

Setting group selection controls the operating characteristics of the function, i.e. the user or user-defined logic can change function parameters while the function is running.

Table. 5.4.17 - 153. Pick-up settings.

Name	Range	Step	Default	Description
P_{set} rev.	0.0…100 000kW	0.01kW	100kW	Pick-up setting

Read-only parameters

The function's *Info* page displays useful, real-time information on the state of the protection function. It is accessed either through the device's HMI display, or through the setting tool software when it is connected to the device and its Live Edit mode is active.

Table. 5.4.17 - 154. Information displayed by the function.

Name	Range	Step	Description
Prev> condition	• Normal • Start • Trip • Blocked	-	Displays the status of the protection function.

Name	Range	Step	Description
Expected operating time	0.000...1800.000s	0.005s	Displays the expected operating time when a fault occurs.
Time remaining to trip	-1800.000...1800.000s	0.005s	When the function has detected a fault and counts down time towards a trip, this displays how much time is left before tripping occurs.
P meas/P set at the moment	1250.00P_m/P_{set}	0.01P_m/P_{set}	The ratio between the measured power and the pick-up value.

Function blocking

The blocking signal is evaluated at the start of each program cycle. The blocking signals are connected to the function's dedicated input, which can be configured in the *IO → Blocking Input Control* tab of the function.

- When the pick-up element activates and the blocking signal is not active, a START signal is generated, and the function starts or continues with the trip time countdown.
- When the pick-up element activates and the blocking signal is active, a BLOCKED signal is generated, and the function does not process the event further.
- When a START signal is already active and the blocking input signal becomes active, the START signal is reset and BLOCKED signal is generated. The release time characteristics are then processed in the same way as when the pick-up signal is reset.

The blocking signal needs to reach the device minimum of 5 ms before the set operating delay has passed in order for the blocking to activate in time.

Operating time characteristics for trip and reset

This function supports definite time delay (DT). For detailed information on these delay types please refer to the chapter "General properties of a protection function" and its section "Operating time characteristics".

Events and registers

The reverse power function (abbreviated "RPW" in event block names) generates events and registers from the status changes in the events listed below. The user can select which event messages are stored in the main event buffer: ON, OFF, or both. The events triggered by the function are recorded with a time stamp.

The function's outputs can be used for direct I/O controlling and user logic programming. The time stamp resolution is 1 ms. The function also provides a resettable cumulative counter for the START, TRIP and BLOCKED events.

The function offers one (1) independent stage.

Table. 5.4.17 - 155. Event messages.

Event block name	Event names
RPW1	Start ON/OFF
RPW1	Trip ON/OFF

© Arcteq Relays Ltd
IM00014

Event block name	Event names
RPW1	Block ON/OFF

The function registers its operation into the last twelve (12) time-stamped registers. The register of the function records the ON event process data for START, TRIP or BLOCKED. The table below presents the structure of the function's register content.

Table. 5.4.17 - 156. Register content.

Register	Description
Date and time	dd.mm.yyyy hh:mm:ss.mss
Event	Event name
Pre-trigger power	Start/Trip -20ms power
Fault power	Start/Trip power
Pre-fault power	Start -200ms power
Trip time remaining	0 ms...1800s
Setting group in use	Setting group 1...8 active

5.4.18 Overfrequency and underfrequency protection (f>/<; 81O/81U)

The frequency protection function can be used both in overfrequency and in underfrequency situations, and it has four (4) stages for both. Frequency protection can be applied to protect feeder, bus, transformer, motor and generator applications. The difference between the generated power and the load demand can cause the frequency to drop below or rise above the allowed level. When the consumption is larger than the generated power, the frequency may drop. When more power is generated than is consumed, overfrequency can occur.

In generator applications too big a load or a malfunction in the power controller can cause the frequency to decrease. Underfrequency causes damage to turbine wings through vibration as well as heating due to increased iron losses, dropped cooling efficieny and over-magnetization in step-up transformers. Overfrequency protection prevents the generator from running too fast which can cause damage to the generator turbine.

Underfrequency and overfrequency protection can be used as an indicator of an accidental island operation in distributed generation and in some consumers (as it is unlikely that the consumed and generated power are the same). Overfrequency is also often used to control power generation to keep the system's frequency consistent.

Each stage can be activated and deactivated individually. After the f>/< mode has been activated (*Protection → Stage activation → Frequency stages*), the user can activate and deactivate the individual stages at will (*Protection → Frequency → Frequency protection f >/< → INFO → Stage operational setup*).

Figure. 5.4.18 - 148. Simplified function block diagram of the f> function.

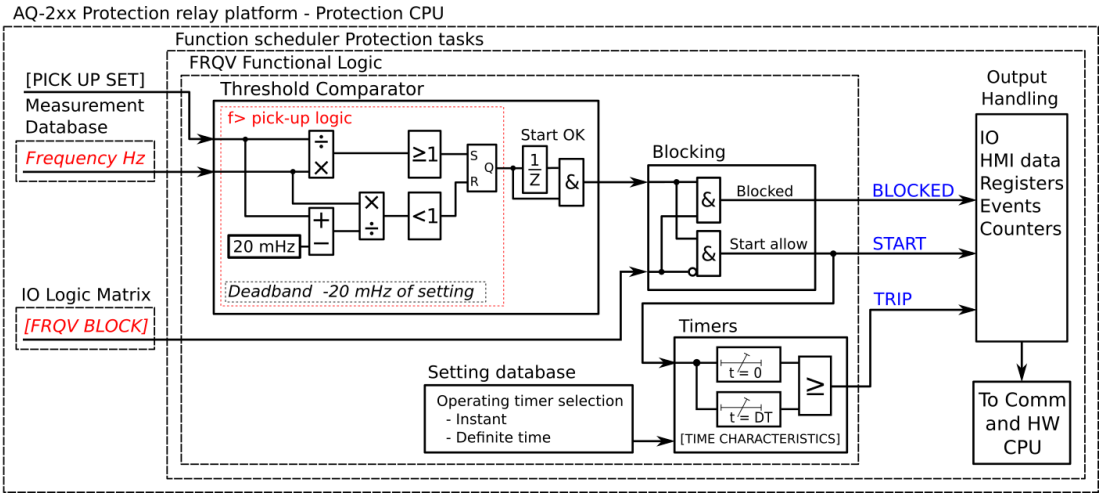

Figure. 5.4.18 - 149. Simplified function block diagram of the f< function.

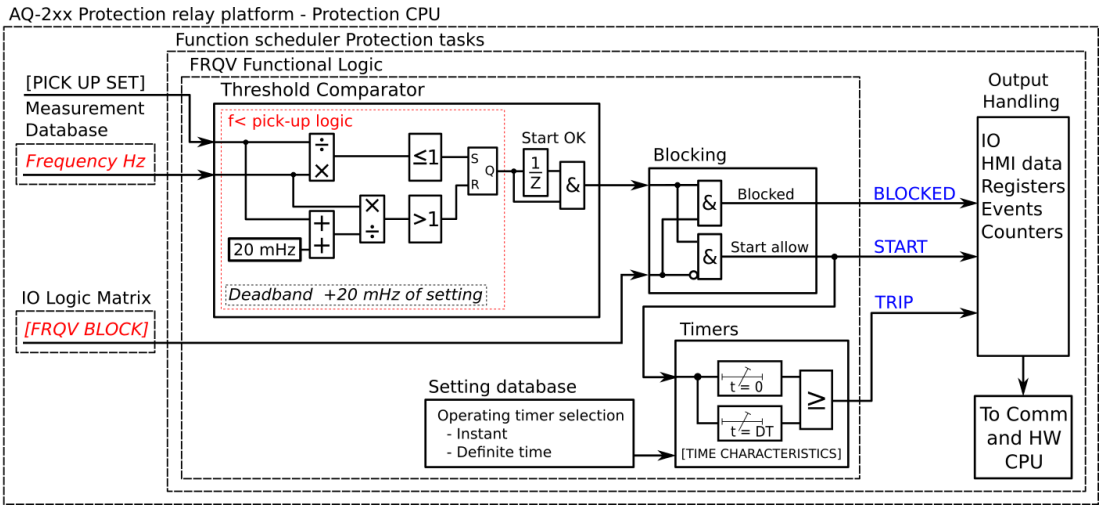

Measured input

The frequency protection function compares the measured frequency to the pick-up setting (given in Hz). There are three (3) frequency references available. Please refer to "Frequency tracking and scaling" chapter for a detailed description of frequency tracking.

Table. 5.4.18 - 157. Measurement inputs of the f>/< function.

Signals	Description
Frequency reference 1	Primary frequency reference
Frequency reference 2	Secondary frequency reference
Frequency reference 3	Tertiary frequency reference

General settings

The following general settings define the general behavior of the function. These settings are static i.e. it is not possible to change them by editing the setting group.

© Arcteq Relays Ltd
IM00014

Table. 5.4.18 - 158. General settings of the function.

Name	Range	Default	Description
f> enable f>> enable f>>> enable f>>>> enable f< enable f<< enable f<<< enable f<<<< enable	• No • Yes	No	Enables or disables the stage.
f> force status to f>> force status to f>>> force status to f>>>> force status to f< force status to f<< force status to f<<< force status to f<<<< force status to	• Normal • Start • Trip • Blocked	Normal	Force the status of the function. Visible only when *Enable stage forcing* parameter is enabled in *General* menu.

Pick-up settings

The f_{set}>, f_{set}>>, etc.setting parameters control the pick-up of each stage of the f>/< function. They define the maximum or minimum allowed measured frequency before action from the function. The function constantly calculates the ratio between the pick-up setting and the measured frequency. The reset ratio of 20mHz is built into the function and is always relative to the pick-up value.

Setting group selection controls the operating characteristics of the function, i.e. the user or user-defined logic can change function parameters while the function is running.

Table. 5.4.18 - 159. Pick-up settings.

Name	Range	Step	Default	Description
f> used in setting group	• No • Yes	-	No	Enables or disables the protection stage in the setting group.
fset>	10.00…80.00Hz	0.01Hz	51Hz	Pick-up setting
fset<	5.00…75.00Hz	0.01Hz	49Hz	Pick-up setting
f< undervoltage block	0.00...120.00%Un	0.01%Un	0.00%Un	Block setting. If set to zero, blocking is not in use. When the measured voltage drops below the set value, the operation of the functions is blocked.

Operating time characteristics for trip and reset

This function supports definite time delay (DT). For detailed information on these delay types please refer to the chapter "General properties of a protection function" and its section "Operating time characteristics".

Read-only parameters

The function's *Info* page displays useful, real-time information on the state of the protection function. It is accessed either through the device's HMI display, or through the setting tool software when it is connected to the device and its Live Edit mode is active.

Table. 5.4.18 - 160. Information displayed by the function.

Name	Range	Step	Description
f</> condition	• Normal • Start • Trip • Blocked	-	Displays the status of the protection function.
f meas / f set	0.000..20.000f_m/f_{set}	0.001f_m/f_{set}	The ratio between the measured frequency and the pick-up value.
Expected operating time	0.000...1800.000s	0.005s	Displays the expected operating time when a fault occurs.
Time remaining to trip	-1800.000...1800.000s	0.005s	When the function has detected a fault and counts down time towards a trip, this displays how much time is left before tripping occurs.

Function blocking

The blocking signal is evaluated at the start of each program cycle. The blocking signals are connected to the function's dedicated input, which can be configured in the *IO → Blocking Input Control* tab of the function.

- When the pick-up element activates and the blocking signal is not active, a START signal is generated, and the function starts or continues with the trip time countdown.
- When the pick-up element activates and the blocking signal is active, a BLOCKED signal is generated, and the function does not process the event further.
- When a START signal is already active and the blocking input signal becomes active, the START signal is reset and BLOCKED signal is generated. The release time characteristics are then processed in the same way as when the pick-up signal is reset.

The blocking signal needs to reach the device minimum of 5 ms before the set operating delay has passed in order for the blocking to activate in time.

Events and registers

The frequency function (abbreviated "FRQV" in event block names) generates events and registers from the status changes in the events listed below. The user can select which event messages are stored in the main event buffer: ON, OFF, or both. The events triggered by the function are recorded with a time stamp.

The function's outputs can be used for direct I/O controlling and user logic programming. The function also provides a resettable cumulative counter for the START, TRIP and BLOCKED events.

© Arcteq Relays Ltd
IM00014

Table. 5.4.18 - 161. Event messages.

Event block name	Event names
FRQV1	f>/< Start ON/OFF
FRQV1	f>/< Trip ON/OFF
FRQV1	f>/< Blocked ON/OFF

The function registers its operation into the last twelve (12) time-stamped registers. The table below presents the structure of the function's register content.

Table. 5.4.18 - 162. Register content.

Register	Description
Date and time	dd.mm.yyyy hh:mm:ss.mss
Event	Event name
f Pre-trig (Hz)	Start/Trip -20ms frequency
f Fault (Hz)	Fault frequency
Setting group in use	Setting group 1...8 active

5.4.19 Rate-of-change of frequency (df/dt>/<; 81R)

The rate-of-change of frequency function is used to detect fast drops or increases in frequency. If the load changes fast this function detects and clears the frequency-based faults faster than conventional underfrequency and overfrequency protections. One of the most common causes for the frequency to deviate from its nominal value is an unbalance between the generated power and the load demand. If the unbalance is big the frequency changes rapidly.

The rate-of-change of frequency protection can also be applied to detect a loss of mains situation. Loss of mains is a situation where a part of the network (incorporating generation) loses its connection with the rest of the system (i.e. becomes an islanded network). A generator that is not disconnected from the network can cause safety hazards. A generator can also be automatically reconnected to the network, which can cause damage to the generator and the network.

Figure. 5.4.19 - 150. Operation of the df/dt>/< function when the frequency starts but doesn't trip.

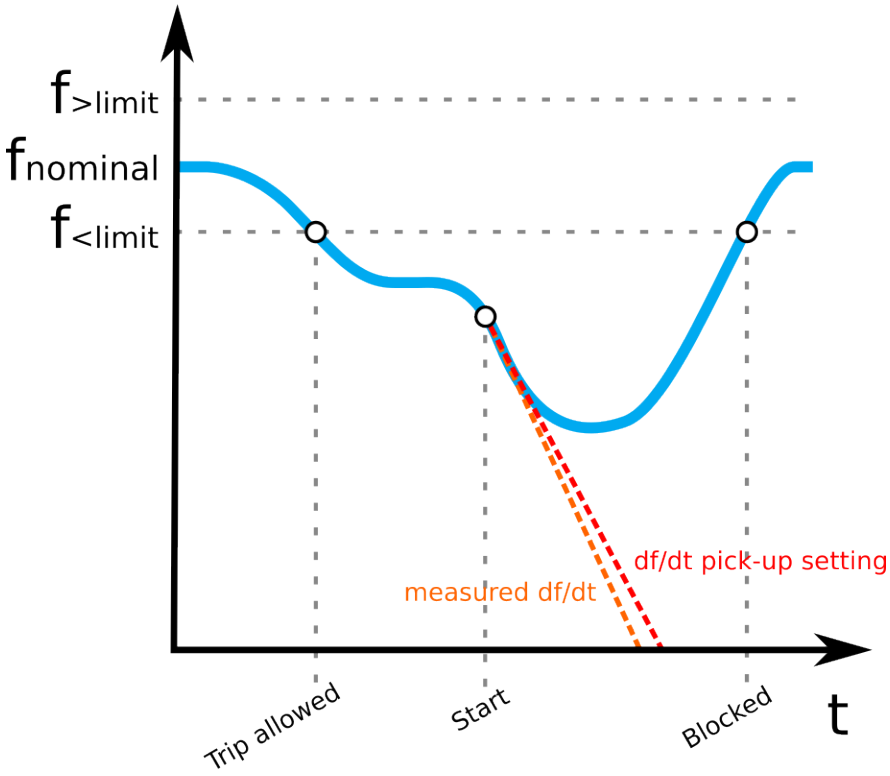

The figure above presents an example of the df/dt>/< function's operation when the frequency is decreasing. If the $f_{<limit}$ and/or $f_{>limit}$ is activated, the function does not trip no matter how fast the measured frequency changes if it's over the $f_{<limit}$ or under $f_{>limit}$. As can be seen in the figure above, when the frequency decreases under the $f_{<limit}$,tripping is allowed although the change of frequency is not yet fast enough for the function to trip. Later the frequency makes a fast dip and as a result the change of frequency is faster than the set pick-up value which then causes the function to operate.

Each stage can be activated and deactivated individually. After the f>/< mode has been activated (*Protection → Stage activation → Frequency stages*), the user can activate and deactivate the individual stages at will (*Protection → Frequency → Frequency protection f >/< → INFO → Stage operational setup*).

Figure. 5.4.19 - 151. Simplified function block diagram of the df/dt>/< function.

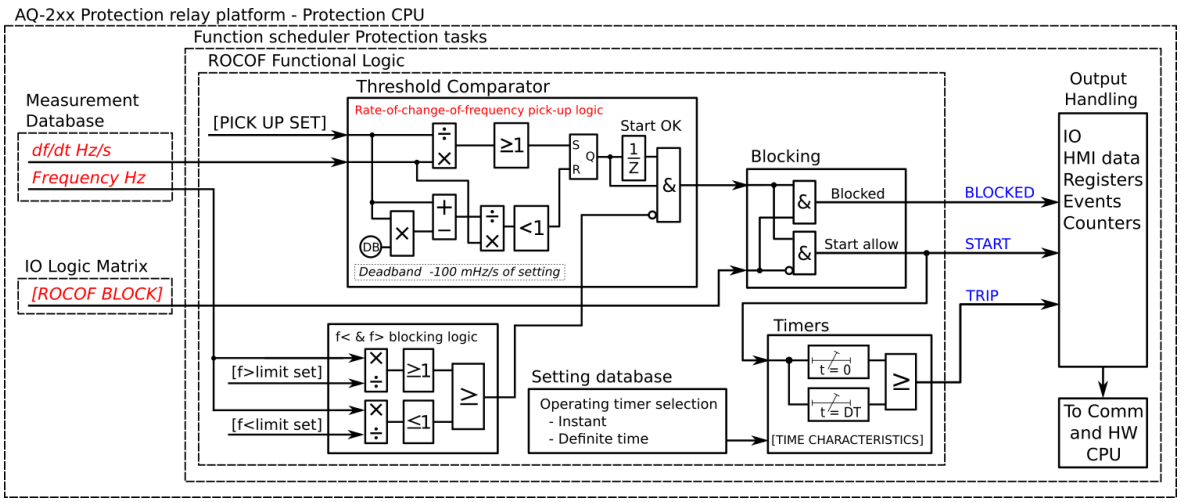

© Arcteq Relays Ltd
IM00014

Measured input

The rate-of-change of frequency protection function compares the measured df/dt>/< ratio to the pick-up setting (given in Hz/s). There are three (3) frequency references available. Please refer to "Frequency tracking and scaling" chapter for a detailed description of frequency tracking.

Table. 5.4.19 - 163. Measurement inputs of the df/dt>/< function.

Signals	Description
Frequency reference 1	Primary frequency reference
Frequency reference 2	Secondary frequency reference
Frequency reference 3	Tertiary frequency reference

General settings

The following general settings define the general behavior of the function. These settings are static i.e. it is not possible to change them by editing the setting group.

Table. 5.4.19 - 164. General settings of the function.

Name	Range	Step	Default	Description
Max allowed df/dt rate	0.10...50.00 Hz/s	0.10 Hz/s	20 Hz/s	If df/dt rate exceeds this setting, the function is blocked.
df/dt >/< (1...8) enable	• No • Yes	-	No	Enables or disables the stage.
df/dt >/< (1...8) force status to	• Normal • Start • Trip • Blocked	-	Normal	Force the status of the function. Visible only when *Enable stage forcing* parameter is enabled in *General* menu.

Pick-up and time delay

The df/dt>/< (1) pick-up, df/dt>/< (2) pick-up, etc. setting parameters control the pick-up of each stage of the df/dt>/< function. They define the maximum or minimum allowed change of frequency before action from the function. The function constantly calculates the ratio between the pick-up setting and the measured df/dt>/<. The reset ratio of +/- 100 mHz/s is built into the function and is always relative to the pick-up value. The f>/< limit value is used to block the funtion from operating near the nominal frequency.

Setting group selection controls the operating characteristics of the function, i.e. the user or user-defined logic can change function parameters while the function is running.

Table. 5.4.19 - 165. Pick-up settings.

Name	Range	Step	Default	Description
df/dt>/< (1…8) used in setting group	• No • Yes	-	No	Enables the protection stage in setting group.
df/dt>/< (1…8) operating mode	• Rising • Falling • Both	-	Rising	Defines the operation mode of the protection stage. In "Rising" mode df/dt function can trip only from increasing frequency. In "Falling" mode df/dt function can trip only from decreasing frequency. "Both" allows df/dt to trip from both.
df/dt>/< (1…8) frequency limit	• Not used • Use f limit	-	Not used	Displays if frequency limits are used or not.
df/dt>/< (1…8) pick-up	0.01…10.00Hz/s	0.01Hz/s	0.2Hz/s	Pick-up setting.
df/dt>/< (1…8) f< limit	7.00…65.00Hz	0.01Hz	49.95Hz	Underfrequency limit. Tripping is permitted when measured frequency is under this value. This parameter is visible only when operation mode is set to "Falling" or "Both".
df/dt>/< (1…8) f> limit	10.00…70.00Hz	0.01Hz	51Hz	Overfrequency limit. Tripping is permitted if measured frequency is above this value. This parameter is visible only when operation mode is set to "Rising" or "Both".

Operating time characteristics for trip and reset

This function supports definite time delay (DT). For detailed information on these delay types please refer to the chapter "General properties of a protection function" and its section "Operating time characteristics".

Read-only parameters

The function's *Info* page displays useful, real-time information on the state of the protection function. It is accessed either through the device's HMI display, or through the setting tool software when it is connected to the device and its Live Edit mode is active.

Table. 5.4.19 - 166. Information displayed by the function.

Name	Range	Step	Description
Measured df/dt	0.000...20.000Hz/s	0.001Hz/s	Rate-of-change-of-frequency at the moment.
df/dt >/< (1...8) condition	• Normal • Start • Trip • Blocked	-	Displays the status of the protection function.

© Arcteq Relays Ltd
IM00014

Name	Range	Step	Description
df/dt >/< (1...8) df/dt meas / df/dt set	0.000...20.000p.u.	0.005p.u.	The ratio between the rate-of-change-of-frequency and the pick-up value.
Expected operating time	0.000...1800.000s	0.005s	Displays the expected operating time when a fault occurs.
Time remaining to trip	-1800.000...1800.000s	0.005s	When the function has detected a fault and counts down time towards a trip, this displays how much time is left before tripping occurs.

Function blocking

The blocking signal is evaluated at the start of each program cycle. The blocking signals are connected to the function's dedicated input, which can be configured in the *IO → Blocking Input Control* tab of the function.

- When the pick-up element activates and the blocking signal is not active, a START signal is generated, and the function starts or continues with the trip time countdown.
- When the pick-up element activates and the blocking signal is active, a BLOCKED signal is generated, and the function does not process the event further.
- When a START signal is already active and the blocking input signal becomes active, the START signal is reset and BLOCKED signal is generated. The release time characteristics are then processed in the same way as when the pick-up signal is reset.

The blocking signal needs to reach the device minimum of 5 ms before the set operating delay has passed in order for the blocking to activate in time.

Events and registers

The rate-of-change of frequency function (abbreviated "DFT" in event block names) generates events and registers from the status changes in the events listed below. The user can select which event messages are stored in the main event buffer: ON, OFF, or both. The events triggered by the function are recorded with a time stamp.

The function's outputs are can be used for direct I/O controlling and user logic programming. The function also provides a resettable cumulative counter for the START, TRIP and BLOCKED events.

Table. 5.4.19 - 167. Event messages.

Event block name	Event names
DFT1	df/dt>/< (1...8) Start ON/OFF
DFT1	df/dt>/< (1...8) Trip ON/OFF
DFT1	df/dt>/< (1...8) Blocked ON/OFF

The function registers its operation into the last twelve (12) time-stamped registers. The table below presents the structure of the function's register content.

Table. 5.4.19 - 168. Register content.

Register	Description
Date and time	dd.mm.yyyy hh:mm:ss.mss
Event	Event name
df/dt>/< Pre-trig (Hz/s)	Start/Trip –20ms df/dt>/<
f Pre-trig (Hz)	Start/Trip –20ms frequency
df/dt>/< Fault (Hz/s)	Fault df/dt>/<
f Fault (Hz)	Fault frequency
Setting group in use	Setting group 1...8 active

5.4.20 Voltage-restrained overcurrent protection (Iv>; 51V)

Short-circuits that occur close to the generator decrease the fault current which in turn inhibits the operation of a high-set overcurrent stage. The decreasing voltage caused by these faults can be used to decrease the current pick-up level and thus to improve sensitivity. This voltage-restrained overcurrent protection function can be used as an alternative for the underimpedance function for more sensitive short-circuit detection in generator protection applications.

When there is a short-circuit near the generator, the voltage decreases which in this function's case decreases the overcurrent's pick-up level according to set parameters. The function can work as voltage-controlled overcurrent protection or as voltage-restrained overcurrent protection. When the set parameter value Ux2 is greater than Ux1, the protection function works as voltage-restrained overcurrent protection. In this case the overcurrent pick-up value increases as the voltage increases between the set values Ux1 and Ux2. The protection function uses positive sequence voltage to define the pick-up level at that moment.

When the set value of Ux1 is equal to Ux2, the function works as voltage-controlled overcurrent protection. Now the overcurrent protection doesn't operate until a fault reduces the voltage below a set value, usually about 80 % of the normal. A fixed pick-up level of voltage-controlled overcurrent protection is easier to coordinate with other protection devices. However, the voltage-restrained overcurrent protection function is less prone to making unwanted operations on motor starting currents and system swings.

Figure. 5.4.20 - 152. Pick-up levels in the two modes.

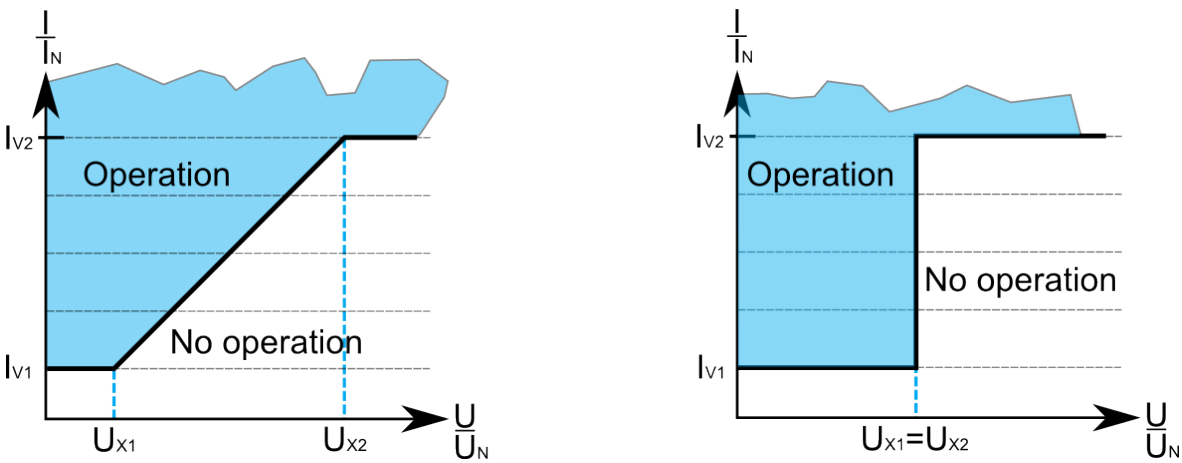

© Arcteq Relays Ltd
IM00014

Figure. 5.4.20 - 153. Simplified function block diagram of the Iv> function.

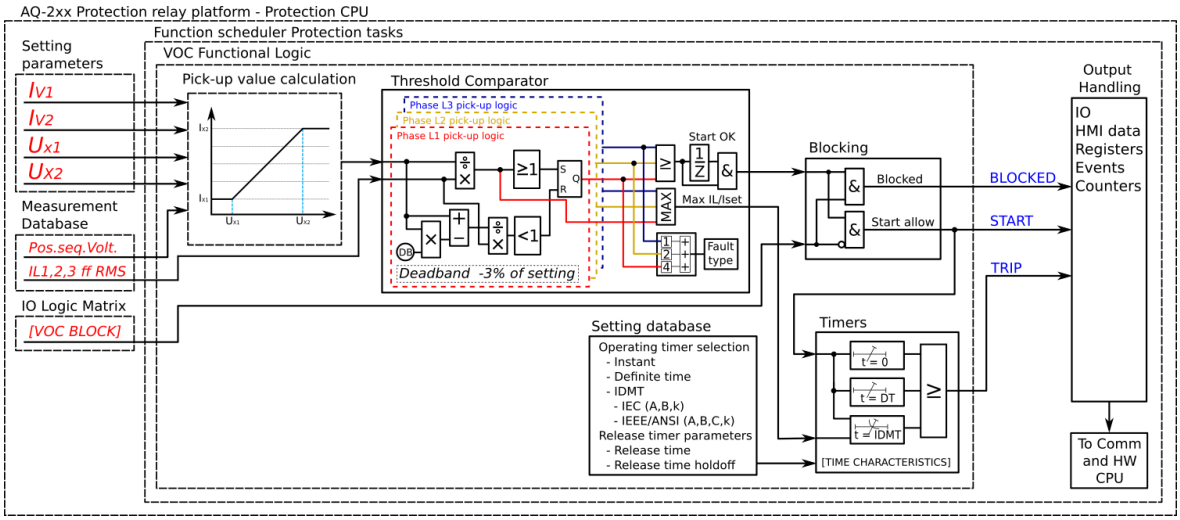

Measured input

The function block uses fundamental frequency component of phase current measurement values. The function block uses fundamental frequency component of phase-to-phase, phase-to-neutral and zero sequence voltage.

Table. 5.4.20 - 169. Measurement inputs of the voltage-restrained overcurrent protection function.

Signal	Description
I_{L1}RMS	Fundamental frequency component of phase L1 (A) current
I_{L2}RMS	Fundamental frequency component of phase L2 (B) current
I_{L3}RMS	Fundamental frequency component of phase L3 (C) current
U_1RMS	Fundamental frequency component of voltage channel U_1/V
U_2RMS	Fundamental frequency component of voltage channel U_2/V
U_3RMS	Fundamental frequency component of voltage channel U_3/V
U_4RMS	Fundamental frequency component of voltage channel U_4/V

General settings

The following general settings define the general behavior of the function. These settings are static i.e. it is not possible to change them by editing the setting group.

Table. 5.4.20 - 170. General settings of the function.

Name	Range	Default	Description
Iv> force status to	• Normal • Start • Trip • Blocked	Normal	Force the status of the function. Visible only when *Enable stage forcing* parameter is enabled in *General* menu.

Pick-up settings

The *Iv1*, *Iv2*, *Ux1*, *Ux2* setting parameters and *the positive sequence voltage measurement* control the pick-up level of the voltage-restrained overcurrent protection function. The pick-up level defines the maximum allowed measured current before action from the function. The function constantly calculates the ratio between the current pick-up level and the measured magnitude (I_m) for each of the three phases. The reset ratio of 97 % is built into the function and is always relative to the current pick-up value.

Setting group selection controls the operating characteristics of the function, i.e. the user or user-defined logic can change function parameters while the function is running.

Table. 5.4.20 - 171. Pick-up settings.

Name	Range	Step	Default	Description
1st knee point (Iv>)	0.10…40.00xI_n	0.01xI_n	0.2 xI_n	The lower current limit.
2nd knee point (Iv2>)	0.10…40.00xI_n	0.01xI_n	1.2xI_n	The higher current limit.
1st knee point voltage (Ux1)	0.00…150.00%U_n	0.01%U_n	20%U_n	The lower voltage limit.
2nd knee point voltage (Ux2)	0.00…150.00%U_n	0.01%U_n	100%U_n	The higher voltage limit. When this value is higher than Ux1, the function operates as voltage-restrained overcurrent protection. If the two values are equal, the function operates as voltage-controlled overcurrent protection.

Read-only parameters

The function's *Info* page displays useful, real-time information on the state of the protection function. It is accessed either through the device's HMI display, or through the setting tool software when it is connected to the device and its Live Edit mode is active.

Table. 5.4.20 - 172. Information displayed by the function.

Name	Range	Step	Description
Iv> condition	• Normal • Start • Trip • Blocked	-	Displays status of the protection function.
Expected operating time	0.000...1800.000s	0.005s	Displays the expected operating time when a fault occurs. When IDMT mode is used, the expected operating time depends on the measured highest phase current value. If the measured current changes during a fault, the expected operating time changes accordingly.

© Arcteq Relays Ltd
IM00014

Name	Range	Step	Description
Time remaining to trip	-1800.000...1800.000s	0.005s	When the function has detected a fault and counts down time towards a trip, this displays how much time is left before tripping occurs.
Voltage measurement	• Invalid U1 not avail. • Ok	-	If phase voltages are not available the function is not able to calculate positive sequence voltage (U1). This can happen when voltage measurement mode has been set to "3LL+U4" or "2LL+U3+U4" mode but none of the channels have been set to "U0" mode.
I> pick-up level now	0.00...1250.00xIn	0.01xIn	Overcurrent pick-up level used by the function at the moment. The pick-up level changes with positive sequence voltage setting changes.
Measured voltage now	0.00...1250.00%Un	0.01%Un	Calculated positive sequence voltage at the moment. This influences the overcurrent pick-up level used by the function.
I_{meas}/I_{set} at the moment	0.00...1250.00	0.01	The ratio between the highest measured phase current and the pick-up value.

Function blocking

The blocking signal is evaluated at the start of each program cycle. The blocking signals are connected to the function's dedicated input, which can be configured in the *IO → Blocking Input Control* tab of the function.

- When the pick-up element activates and the blocking signal is not active, a START signal is generated, and the function starts or continues with the trip time countdown.
- When the pick-up element activates and the blocking signal is active, a BLOCKED signal is generated, and the function does not process the event further.
- When a START signal is already active and the blocking input signal becomes active, the START signal is reset and BLOCKED signal is generated. The release time characteristics are then processed in the same way as when the pick-up signal is reset.

The blocking signal needs to reach the device minimum of 5 ms before the set operating delay has passed in order for the blocking to activate in time.

Operating time characteristics for trip and reset

This function supports definite time delay (DT) and inverse definite minimum time delay (IDMT). If IDMT is selected for this function, the time delay depends on the ratio between the measured current and the current pick-up level at that moment. This means that the operation time can also shorten as a result of the reduced voltage. For detailed information on these delay types please refer to the chapter "General properties of a protection function" and its section "Operating time characteristics".

Events and registers

The voltage-restrained overcurrent protection function (abbreviated "VOC" in event block names) generates events and registers from the status changes in the events listed below. The user can select which event messages are stored in the main event buffer: ON, OFF, or both. The events triggered by the function are recorded with a time stamp.

The function's outputs can be used for direct I/O controlling and user logic programming. The function also provides a resettable cumulative counter for the START, TRIP and BLOCKED events.

Table. 5.4.20 - 173. Event messages.

Event block name	Event names
VOC1	Start ON/OFF
VOC1	Trip ON/OFF
VOC1	Block ON/OFF

The function registers its operation into the last twelve (12) time-stamped registers. The register of the function records the ON event process data for START, TRIP or BLOCKED. The table below presents the structure of the function's register content.

Table. 5.4.20 - 174. Register content.

Register	Description
Date and time	dd.mm.yyyy hh:mm:ss.mss
Event	Event name
Fault type	L1-E…L1-L2-L3
Pre-trigger current	Start/Trip -20ms current
Fault current	Start/Trip current
U1 Voltage	Positive sequence voltage
Current pick-up	Pick-up current level
Pre-fault current	Start -200ms current
Trip time remaining	0 ms...1800s
Setting group in use	Setting group 1...8 active

5.4.21 Line thermal overload protection (TF>; 49F)

The line thermal overload function is used for the thermal capacity monitoring and protection of cables and overhead lines. This function can also be used for any single time constant application like inductor chokes, certain types of transformers and any other static units which do not have active cooling apart from the cables and overhead lines.

The function constantly monitors the instant values of phase TRMS currents (including harmonics up to 31st) and calculates the set thermal replica status in 5 ms cycles. The function includes a total memory function of the load current conditions according to IEC 60255-8.

The function is based on a thermal replica which represents the protected object's or cable's thermal loading in relation to the current going through the object. The thermal replica includes the calculated thermal capacity that the "memory" uses; it is an integral function which tells this function apart from a normal overcurrent function and its operating principle for overload protection applications.

The thermal image for the function is calculated according to the equation described below:

© Arcteq Relays Ltd
IM00014

$$\theta_{t\%} = \left(\left(\theta_{t-1} - \left(\frac{I_{max}}{I_n \times k_{SF} \times k_{amb}} \right)^2 \times e^{-\frac{t}{\tau}} \right) + \left(\frac{I_{max}}{I_n \times k_{SF} \times k_{amb}} \right)^2 \right) \times 100\%$$

Where:

- $\theta_{t\%}$ = Thermal image status in percentages of the maximum thermal capacity available
- θ_{t-1} = Thermal image status in a previous calculation cycle (the memory of the function)
- I_{max} = Measured maximum of the three TRMS phase currents
- I_n = Current for the 100 % thermal capacity to be used (the pick-up current in p.u., t_{max} achieved in τ x 5)
- k_{SF} = Loading factor (service factor), the maximum allowed load current in p.u., dependent on the protected object or the cable/line installation
- k_{amb} = Temperature correction factor, either from a linear approximation or from a settable ten-point thermal capacity curve
- e = Euler's number
- t = Calculation time step in seconds (0.005 s)
- τ = Thermal time constant of the protected object (in minutes)

The basic operating principle of the thermal replica is based on the nominal temperature rise, which is achieved when the protected object is loaded with a nominal load in a nominal ambient temperature. When the object is loaded with a nominal load for a time equal to its heating constant tau (τ), 63% of the nominal thermal capacity is used. When the loading continues until five times this given constant, the used thermal capacity approaches 100 % indefinitely but never exceeds it. With a single time constant model the cooling of the object follows this same behavior, the reverse of the heating when the current feeding is zero.

Figure. 5.4.21 - 154. Example of thermal image calculation with nominal conditions.

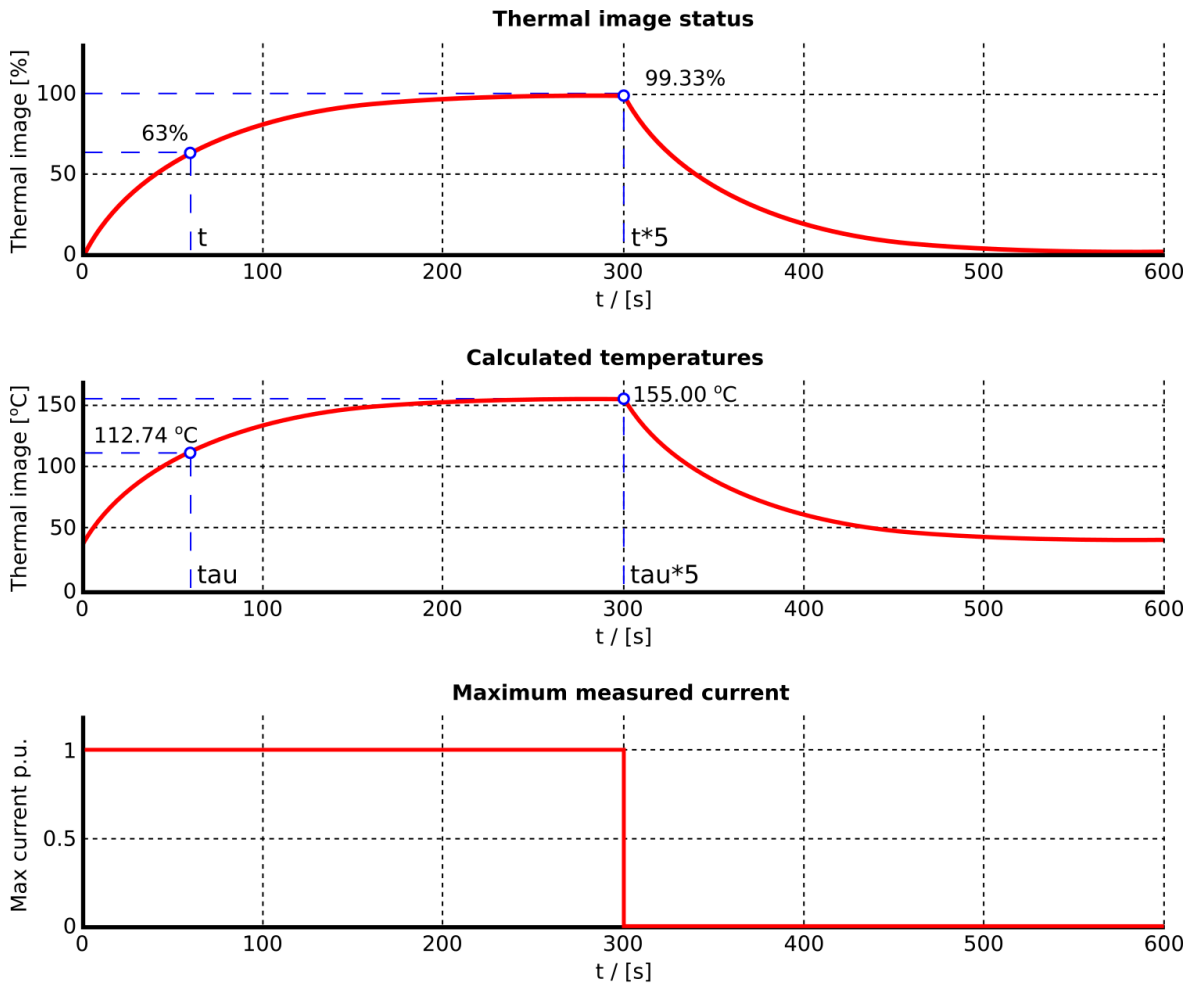

Settings

Qt-1 = 0.01 %	Max. temperature rise = 115 °C
tau = 1.00 minutes	Ambient temperature = 40 °C
Serv.Fact = 1.00	Max End. Temp = 155.00 °C
	Temp k fact = 1.00

The described behavior is based on the assumption that the monitored object (whether a cable, a line or an electrical device) has a homogenous body which generates and dissipates heat with a rate proportional to the temperature rise caused by the current squared. This is usually the case with cables and other objects while the heat dissipation of overhead lines is dependent on the weather conditions. Weather conditions considering the prevailing conditions in the thermal replica are compensated with the ambient temperature coefficient which is constantly calculated and changing when using RTD sensor for the measurement. When the ambient temperature of the protected object is stable it can be set manually (e.g. underground cables).

The ambient temperature compensation takes into account the set minimum and maximum temperatures and the load capacity of the protected object as well as the measured or set ambient temperature. The calculated coefficient is a linear correction factor, as the following formula shows:

© Arcteq Relays Ltd
IM00014

$$t_{amb} < t_{min} = k_{min}$$

$$t_{amb} < t_{ref} = \left(\frac{1 - k_{min}}{t_{ref} - t_{min}} \times (t_{amb} - t_{min})\right) + k_{min}$$

$$t_{amb} > t_{ref} = \left(\frac{k_{max} - 1}{t_{max} - t_{ref}} \times (t_{amb} - t_{ref})\right) + 1.0$$

$$t_{amb} > t_{max} = k_{max}$$

Where:

- t_{amb} = Measured (or set) ambient temperature (can be set in ˚C or in ˚F)
- t_{max} = Maximum temperature (can be set in ˚C or in ˚F) for the protected object
- k_{max} = Ambient temperature correction factor for the maximum temperature
- t_{min} = Minimum temperature (can be set in ˚C or in ˚F) for the protected object
- k_{min} = Ambient temperature correction factor for the minimum temperature
- t_{ref} = Ambient temperature reference (can be set in ˚C or in ˚F, the temperature in which the manufacturer's temperature presumptions apply, the temperature correction factor is 1.0)

Figure. 5.4.21 - 155. Ambient temperature coefficient calculation (a three-point linear approximation and a settable correction curve).

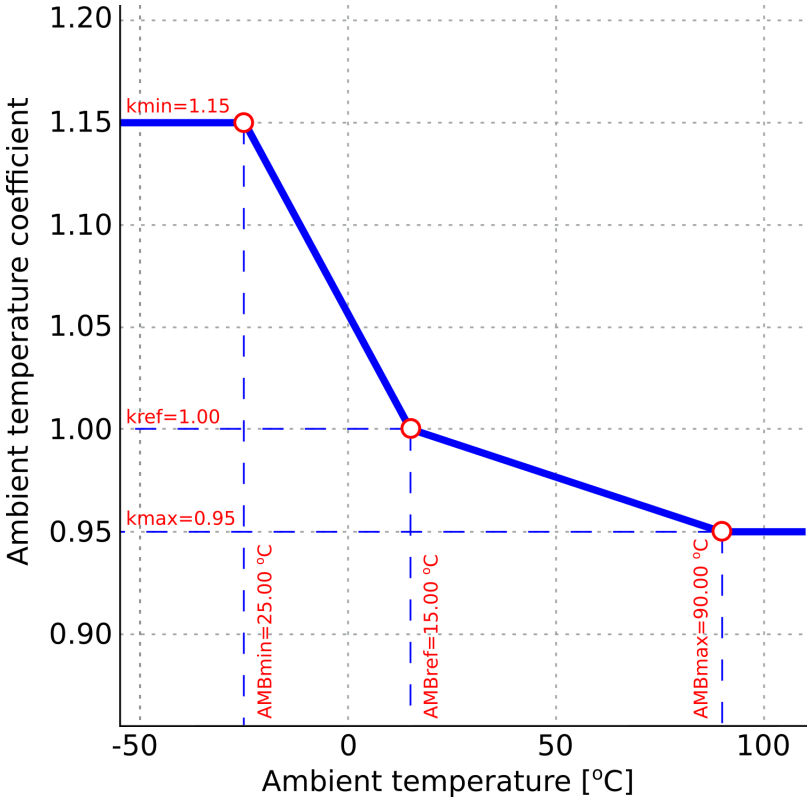

As can be seen in the diagram above, the ambient temperature coefficient is relative to the nominal temperature reference. By default the temperature reference is +15 °C (underground cables) which gives the correction factor value of 1.00 for the thermal replica.

A settable thermal capacity curve uses the linear interpolation for ambient temperature correction with a maximum of ten (10) pairs of temperature–correction factor pairs.

Figure. 5.4.21 - 156. Example of the relationship between ground temperature and correction factor.

Conductor temperature	Ground temperature, C°										
C°	-5	0	5	10	15	20	25	30	35	40	45
90	1.13	1.10	1.06	1.03	1.00	0.96	0.93	0.89	0.86	0.82	0.77

The temperature coefficient may be informed in a similar manner to the figure above in a datasheet provided by the manufacturer.

Figure. 5.4.21 - 157. Settings of the function's ambient temperature coefficient curve.

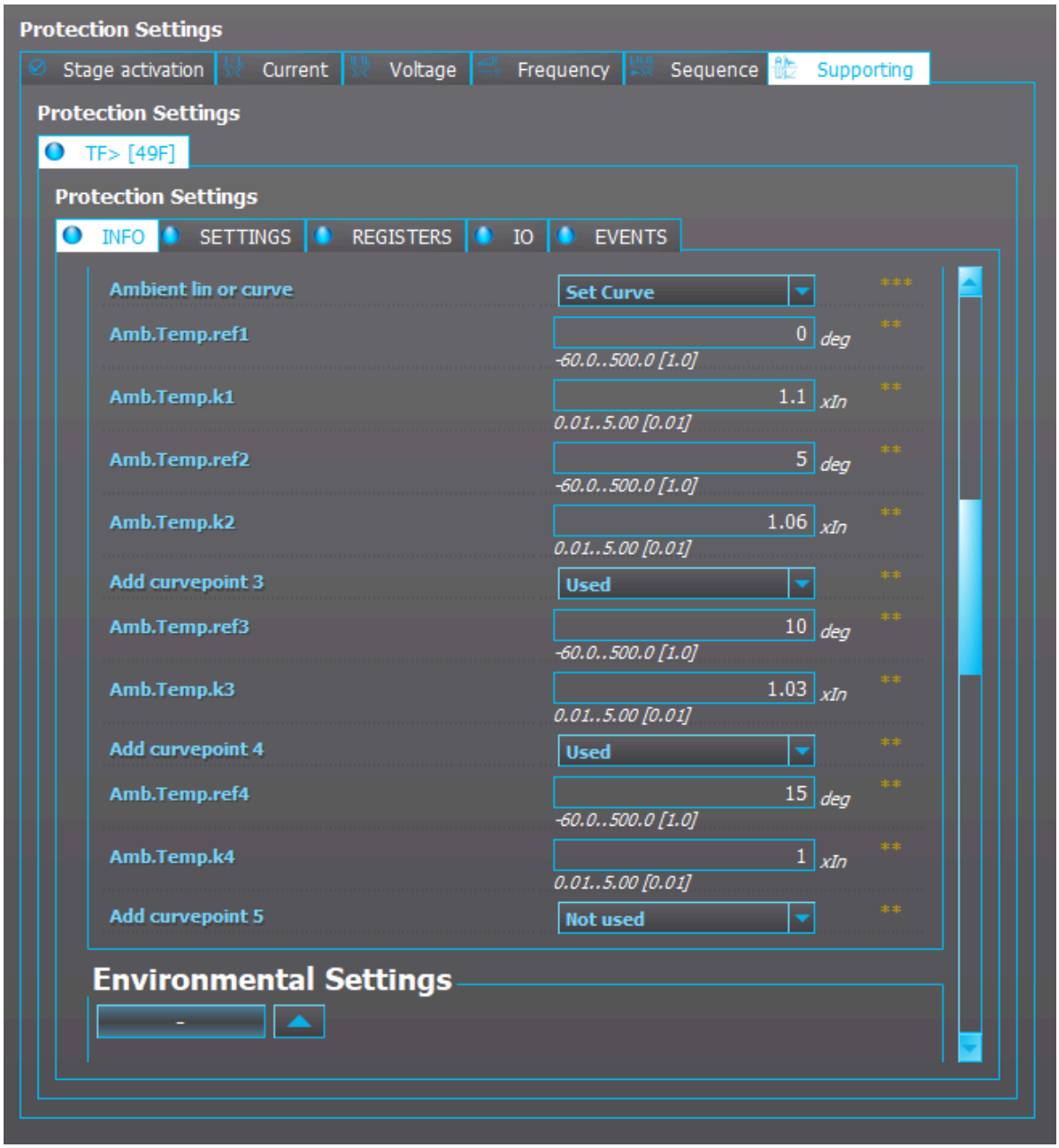

The temperature and correction factor pairs are set to the function's settable curve.

© Arcteq Relays Ltd
IM00014

Figure. 5.4.21 - 158. Set correction curve for ambient temperature.

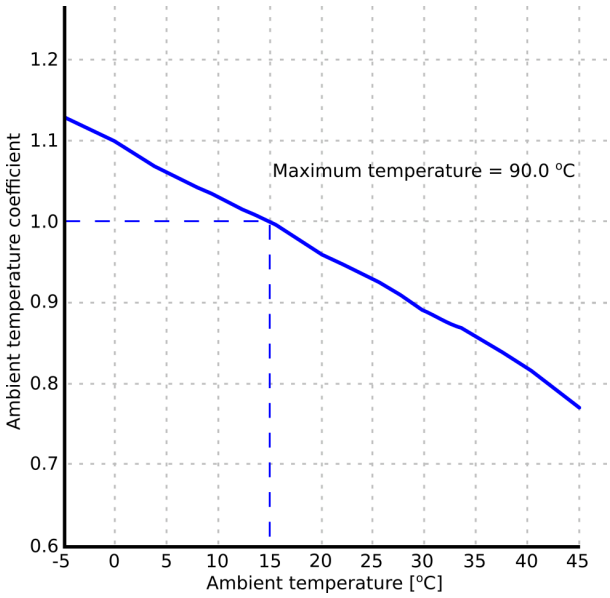

The correction curve for ambient temperature is shown in the figure above. The reference temperature for underground cables is usually +15 ˚C which gives a correction factor of 1.00 (in this case also the nominal temerature). The curve does not need to use as all the available points. The minimum setting is two pairs, resulting in a straight line.

For cables the ambient temperature correction is just one correction factor. The k_{SF} correction factor is used for non-changing corrections; its calculation is explained later in this manual. Calculating correction factors for a cable or overhead installation requires the consulting of the datasheet for the technical specifications of the used cable. This information is usually provided by the cable manufacturer. For example, cable data may be presented as in the figures below (an example from a Prysmian Group cable datasheet) which show the cable's temperature characteristics and voltage ratings (1st image) with different installations and copper or aluminum conductors (2nd and 3rd image).

Figure. 5.4.21 - 159. Example of a high-voltage cable datasheet.

Sample Constructions

Rated voltages
U_o/U = 38/66 kV
U_m = 72.5 kV
U_p = 325 kV
Rated temperatures
- Maximum permissible temp. of conductor in continuous use 90°C
- Maximum permissible temp. of conductor in short-circuit 250°C (for durations up to 5 sec.)

Standard IEC 60840

72 kV Cables 36/66 kV Single core, XLPE-insulated high voltage power cables

Nominal cross-sectional area of conductor	mm²	300	500	800	1200	1600

Continuous current-carrying capacities

Conductor	Cables laid	Conductor temperature	Laying formation	Screen circuit						
Aluminium	In ground of 15°C	65°C	Flat	Open	A	435	575	750	910	1040
				Closed	A	415	525	640	710	750
			Trefoil	Open	A	415	545	700	830	930
				Closed	A	410	535	680	790	870
		90°C	Flat	Open	A	515	680	890	1080	1235
				Closed	A	490	625	770	860	920
			Trefoil	Open	A	490	645	830	990	1110
				Closed	A	485	635	805	945	1045
	In air of 25°C	90°C	Flat	Open	A	685	930	1265	1555	1815
				Closed	A	660	865	1105	1270	1390
			Trefoil	Open	A	605	820	1095	1335	1535
				Closed	A	600	810	1085	1320	1515
Copper	In ground of 15°C	65°C	Flat	Open	A	560	730	940	1200	1390
				Closed	A	520	635	740	820	855
			Trefoil	Open	A	535	685	860	1095	1240
				Closed	A	525	670	820	1005	1105
		90°C	Flat	Open	A	660	865	1115	1415	1645
				Closed	A	620	765	900	1005	1055
			Trefoil	Open	A	630	815	1025	1305	1485
				Closed	A	620	795	980	1205	1335
	In air of 25°C	90°C	Flat	Open	A	880	1185	1585	2040	2420
				Closed	A	830	1065	1305	1505	1620
			Trefoil	Open	A	775	1035	1355	1765	2065
				Closed	A	770	1025	1340	1685	1940

Maximum permissible short-circuit currents for short-circuit duration of one second

Aluminium conductor	kA	28.3	47.2	75.6	113.4	151.2
Copper conductor	kA	42.8	71.4	114.2	171.4	228.5

The datasheet shows the currents which in a combination with a specific installation and a specific construction method achieve a specific conductor temperature in give standard conditions (e.g. a copper conductor reaches a temperature of 90 °C when, for example, it has a continuous current-carrying capacity of 815 A, an open screen circuit, and is laid in a trefoil formation in soil whose temperature is 15 °C).

The most important parameters for setting a working thermal image are the cable's current and the installation place. In addition to the above-mentioned current-carrying capacity table, the manufacturer should also provide data to allow for fine-tuning the thermal image. Equally important to the ampere–temperature values are the presumptive conditions under which the given continuous current-carrying capacity values can be expected to apply. The following figure is an example of these general presumption as presented in a Prysmian Group cable datasheet.

© Arcteq Relays Ltd
IM00014

Figure. 5.4.21 - 160. General presumptions of high-voltage cables.

Continuous current-carrying capacity

A separate group of three single core cables can be continuously loaded according to the tables on pages 8 to 14 if the presumptions below are fulfilled. Correction factors for other installations are given in tables 1-7.
The current-carrying capacities are calculated in accordance with the IEC Publication 60287 and under the presumptions given below.

Presumptions

- One three-phase group of single core cables
- Maximum permissible temperature of inner conductor in continuous use:
- XLPE insulated cables 90°C
- Ambient air temperature 25°C
- Ground temperature 15°C
- Depth of laying of cables 1.0 m
- Distance between single core cables:
  - in case of flat formation = one cable diam.
  - in case of trefoil formation = cables touching each other
- Thermal resistivity of soil 1.0 K m/W
- Cable in air = heat dissipation conditions same as if cables in free air.
- Open screen circuit in single core cable group = circuit of metal sheaths, concentric conductors or metallic screens connected to each other and earthed at one point only = screens bonded at a single point. In addition, screen circuit is considered open when cross-bonded at equal interval.
- Closed screen circuit in single core cable group = circuit of metal sheaths, concentric conductors or metallic screens connected to each other at both ends of the group and earthed at least at one end = screens bonded at both ends.

XLPE-insulated cables buried directly in ground
XLPE-insulated cables can continuously be loaded to a conductor temperature of 90°C.
In underground installations, if a cable in the ground is continuously operated at this highest rated conductor temperature, the thermal resistivity of the soil surrounding the cable may in the course of time increase from its original value as a result of the drying-out processes. As a consequence, the conductor temperature may greatly exceed the highest rated value.

Using single-point bonding or cross-bonding instead of both-end bonding results in considerable increase in current carrying capacity.

If the installation conditions vary from the presumed conditions manufacturers may give additional information on how to correct the the current-carrying capacity to match the changed conditions. Below is an example of the correction factors provided a manufacturer (Prysmian) for correcting the current-carrying capacity.

Figure. 5.4.21 - 161. Example of correction factors for the current-carrying capacity as given by a manufacturer.

Correction factors for the current-carrying capacity

The following tables of correction factors are to be applied to the current-carrying capacity when installation conditions vary from the presumptions above.

The rating for most conditions can be quickly estimated by multiplying the continuous current-carrying capacity value by the correction factors given in the appropriate tables 1-7.

Table 1. Correction factors for groups of cables buried directly in ground

Spacing between groups of cables, mm	Numbers of groups of single core cables beside each other						
	2	3	4	5	6	8	10
0 (touching)	0.79	0.69	0.63	0.58	0.55	0.50	0.46
70	0.85	0.75	0.68	0.64	0.60	0.56	0.53
250	0.87	0.79	0.75	0.72	0.69	0.66	0.64

The values apply to groups of three single core cables (in trefoil or flat formation) without or with spacing between the cable groups horizontally placed.

Table 2. Correction factors for different thermal resistivities of soil

Thermal resistivity of soil Km/W	0.7	1.0	1.2	1.5	2.0	2.5	3.0
Correction factor	1.10	1.00	0.92	0.85	0.75	0.69	0.63

Examples of thermal resistivities of soil:

- dry sand (moisture content 0%) 3.0 K m/W
- dry gravel and clay 1.5 K m/W
- semi-dry gravel and sand (moisture content 10%) 1.2 K m/W
- semi-dry and moist gravel 1.0 K m/W
- moist clay and sand (moisture content 25%) 0.7 K m/W

Table 3. Correction factors for different installation depths in ground

Depth of laying, m	0.50-0.70	0.71-0.90	0.91-1.10	1.11-1.30	1.31-1.50
Rating factor	1.05	1.02	1.00	0.97	0.95

Table 4. Correction factors for different ground temperatures

Conductor temperature C°	Ground temperature, C° -5	0	5	10	15	20	25	30	35	40	45
90	1.13	1.10	1.06	1.03	1.00	0.96	0.93	0.89	0.86	0.82	0.77
80	1.14	1.11	1.07	1.04	1.00	0.96	0.92	0.88	0.83	0.78	0.73
70	1.17	1.13	1.09	1.04	1.00	0.95	0.90	0.85	0.80	0.73	0.67
65	1.18	1.14	1.10	1.05	1.00	0.95	0.89	0.84	0.77	0.71	0.63

Table 5. Correction factors for different cables in unfilled plastic pipes

Spacing between the tubes, mm	Numbers of tubes beside each other							
	1	2	3	4	5	6	8	10
0 (touching)	0.80	0.75	0.65	0.60	0.60	0.55	0.55	0.50
70		0.75	0.70	0.65	0.60	0.60	0.55	0.55
250		0.75	0.70	0.70	0.70	0.65	0.65	0.65

For parallel ducts with a group of three single core cables in each and with the cables equally loaded the current-carrying capacity indicated on pages 8 to 14 for cables buried directly in ground shall be reduced by correction factors given above.

The reduction in current carrying capacity can be avoided if the pipes after cable pulling are filled with material thermally equal to the ambient ground.

If factors in table 5 are used, factors in table 1 are not applicable.

Table 6. Correction factors for different ambient air temperatures

Conductor temperature C°	Ambient air temperature, C° 10	15	20	25	30	35	40	45	50	55
90	1.12	1.08	1.04	1.00	0.95	0.90	0.85	0.80	0.74	0.68
80	1.14	1.09	1.05	1.00	0.95	0.89	0.84	0.77	0.69	0.61
70	1.18	1.12	1.06	1.00	0.93	0.86	0.79	0.71	0.62	0.52
65	1.20	1.14	1.07	1.00	0.93	0.85	0.77	0.68	0.57	0.45

Table 7. Correction factors for different groups of three single core cables laid in the air

This applies only when the cable temperature does not affect the ambient air temperature.

Type of laying		Cables laid in flat formation. Spacing = One cable diameter (d). Distance from the wall not less than 20 mm.			Cables laid in trefoil formation. Spacing = Two cable diameters (2d). Distance from the wall not less than 20 mm.		
Number of groups		1	2	3	1	2	3
		Correction factor			Correction factor		
On floor		0.92	0.89	0.88	0.95	0.90	0.88
On metal trays (restricted air circulation)	Number of trays						
	1	0.92	0.89	0.88	0.95	0.90	0.88
	2	0.87	0.84	0.83	0.90	0.85	0.83
	3	0.84	0.82	0.81	0.88	0.83	0.81
	6	0.82	0.80	0.79	0.86	0.81	0.79
On metal ladders	Number of ladders						
	1	1.00	0.97	0.96	1.00	0.98	0.96
	2	0.97	0.94	0.93	1.00	0.95	0.93
	3	0.96	0.93	0.92	1.00	0.94	0.92
	6	0.94	0.91	0.90	1.00	0.93	0.90

© Arcteq Relays Ltd
IM00014

Arrangements where reduction of current is not necessary	The cooling of cables in flat formation by increased spacing will get better while the losses in metallic screens and sheaths will increase reducing the current-carrying capacity. Each case must be calculated separately.						
Systems placed on top of each other	1	2	3		1	2	3
	Correction factor				Correction factor		
On structures or on wall	0.94	0.91	0.89		0.89	0.86	0.84

To demonstrate the importance of the k_{SF} (service factor, current-carrying capacity), let us calculate a cable installation with the correct k factor but without setting it to correct value.

First we read the initial data for the setup of the thermal image:

A 66 kV copper cable with a cross-section of 500 mm^2 is installed into ground. Its 1 s permissible short-circuit current is 71.4 kA and its insulation is XLPE. The cable's screen circuit is open and the laying formation is flat. Its current-carrying capacity is 575 A in 65 ˚C and 680 A in 90 ˚C. The reference temperature for ground installation is 15 ˚C.

Let us calculate an estimation of the time constant τ based on the known one-second short-circuit current related to I_n. If the manufacturer has not provided the time constant, it can be estimated from the maximum permissable short-circuit current (usually a one second value). The function uses this same method to estimate the heating time constant.

$$\tau_{cable} = \frac{1\ \mathrm{s}}{60\ \mathrm{s}} \times \left(\frac{I_{1\,s}}{I_n}\right)^2 = \frac{1\ \mathrm{s}}{60\ \mathrm{s}} \times \left(\frac{71\,400\ \mathrm{A}}{680\ \mathrm{A}}\right)^2 = 183.75\ \mathrm{min}$$

The rest of the settings are in the initial data text above:

- I_n = 680 A
- T_{max} = 90 ˚C
- T_{amb} = 15 ˚C
- T_{ref} = 15 ˚C
- k_{SF} = 1.0.

Figure. 5.4.21 - 162. Thermal image response with nominal load (installation according to presumptions).

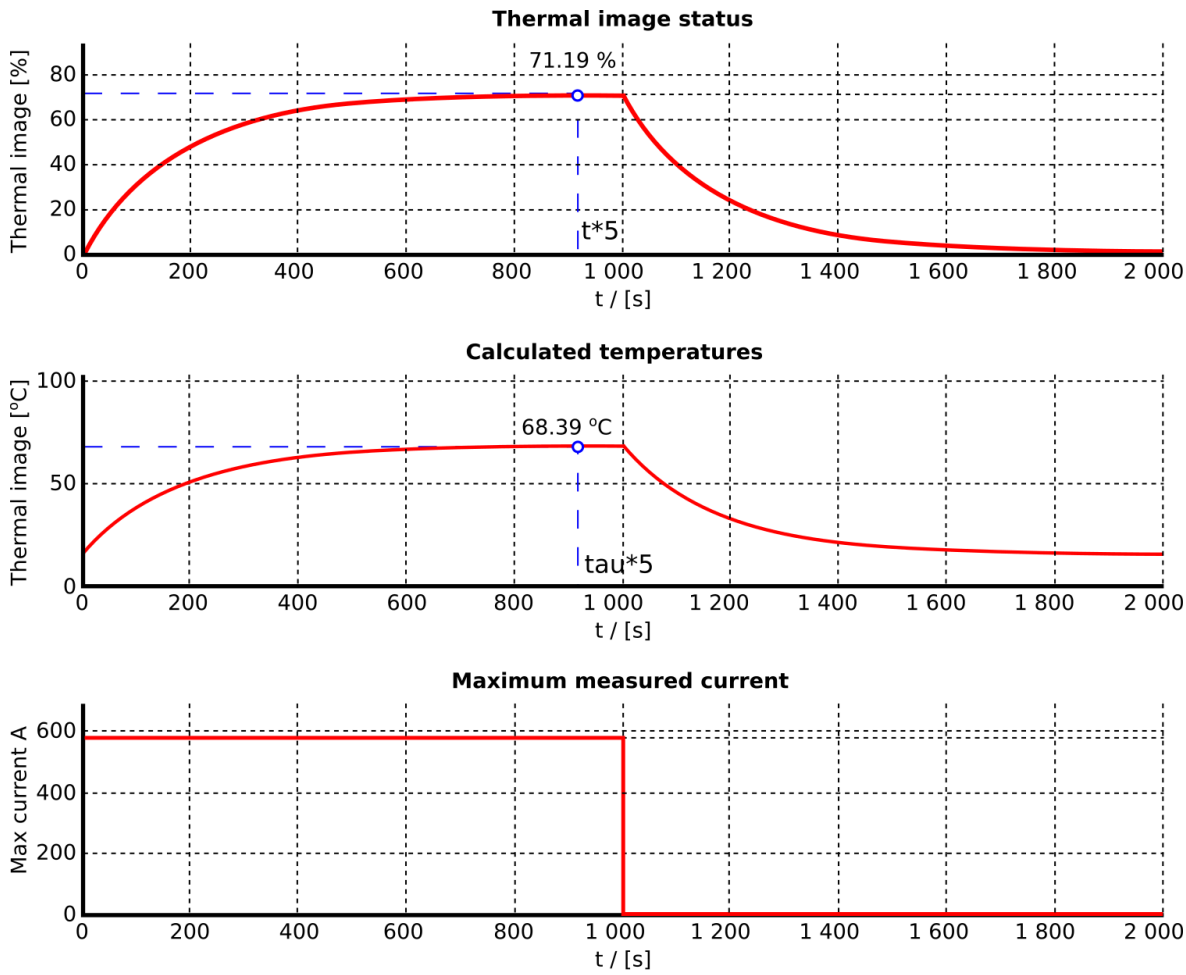

Settings

I_N = 680 A	Max. temperature rise = 75 °C	Reference temperature = 15 °C
Starting temp = 0 %	Ambient temperature = 15 °C	I_{MAX} = 575 A
tau = 183.75 min	Max End. Temp = 90 °C	
Service factor = 1.00	Temperature k factor = 1.00	

As the results show, the end temperature of 68.39 ˚C is reached when the cable is loaded with a stable current for time equalling five times the time constant τ. This uses approximately 71 % of the thermal capacity. According to the datasheet, this current should set the temperature around 65 ˚C; therefore, the model overprotects by three degrees.

© Arcteq Relays Ltd
IM00014

Figure. 5.4.21 - 163. Thermal image response with maximum load (installation according presumptions).

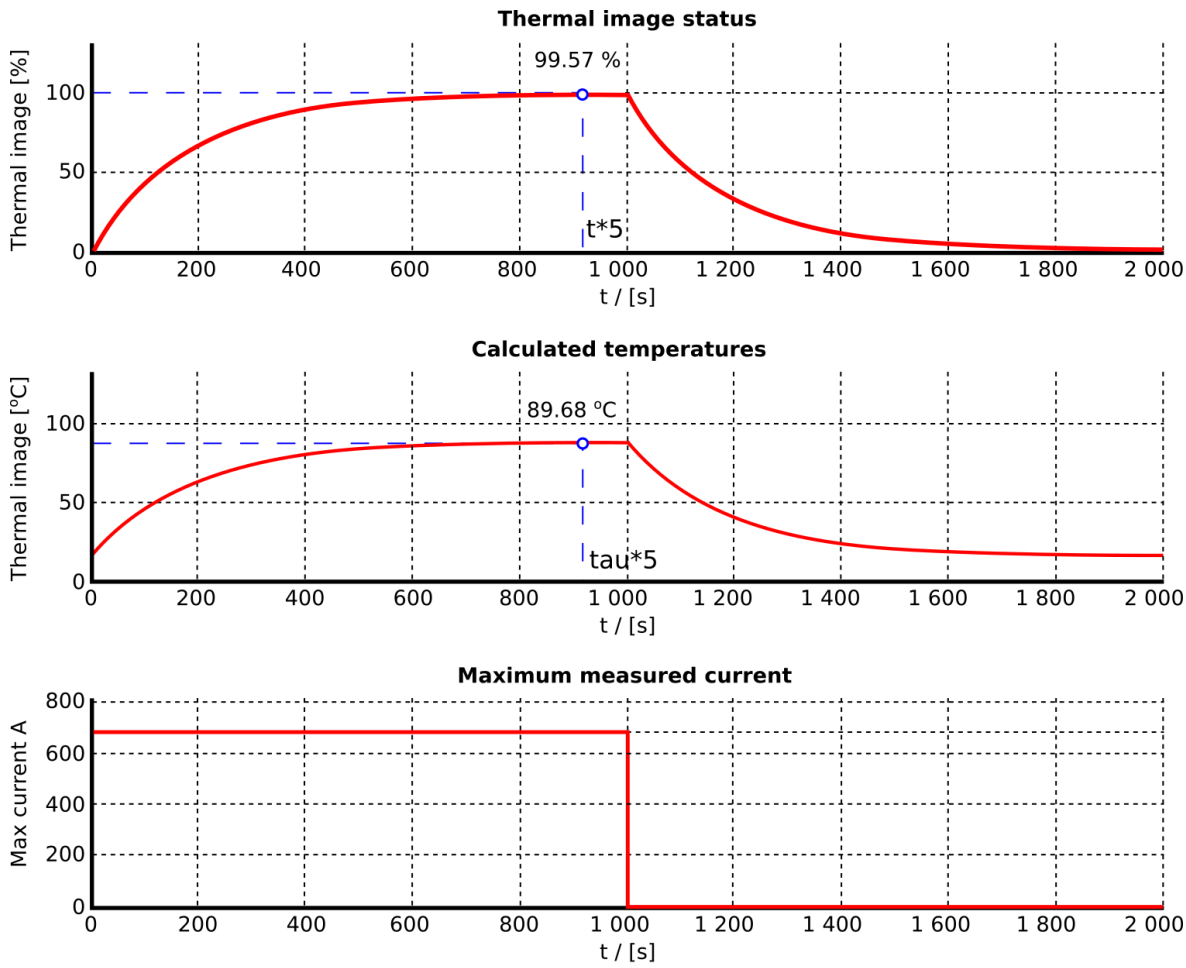

Settings

I_N = 680 A	Max. temperature rise = 75 °C	Reference temperature = 15 °C
Starting temp = 0 %	Ambient temperature = 15 °C	I_{MAX} = 680 A
tau = 183.75 min	Max End. Temp = 90 °C	
Service factor = 1.00	Temperature k factor = 1.00	

The maximum allowed load results in the end temperature of 89.68 ˚C which means that 99.57 % of the thermal capacity is used. This result matches the expectations of the thermal image perfectly. The user can now securely set the cable's overheating alarm.

When comparing the result to the fully-tuned model in the application, let us include all of the installation correction factors to the image.

A 66 kV copper cable with a cross-section of 500 mm^2 is installed *with no adjacent cables (k=1)* into a *ground consisting of dry gravel and clay (k=0.85)* and *into the depth of 1.5 meters (k=0.95)*. The cable's 1 s permissible short-circuit current is 71.4 kA and its insulation is XLPE. The cable's screen circuit is open and the laying formation is flat. Its current-carrying capacity is 575 A in 65 ˚C and 680 A in 90 ˚C. The reference temperature for ground installation is 15 ˚C. The cable's thermal time constant is 183.8 min.

From this initial data one can calculate the k_{SF} correction factor according to the following formula (k factor related information in italics):

$$k_{SF} = 1 \times 0.85 \times 0.95 = 0.81$$

Therefore, the settings are as follows:

- I_n = 680 A
- T_{max} = 90 ˚C
- T_{amb} = 15 ˚C
- T_{ref} = 15 ˚C
- τ = 183.8 min
- k_{SF} = 0.81.

Figure. 5.4.21 - 164. Thermal image response with nominal currents and fine-tuned k_{SF} correction factor.

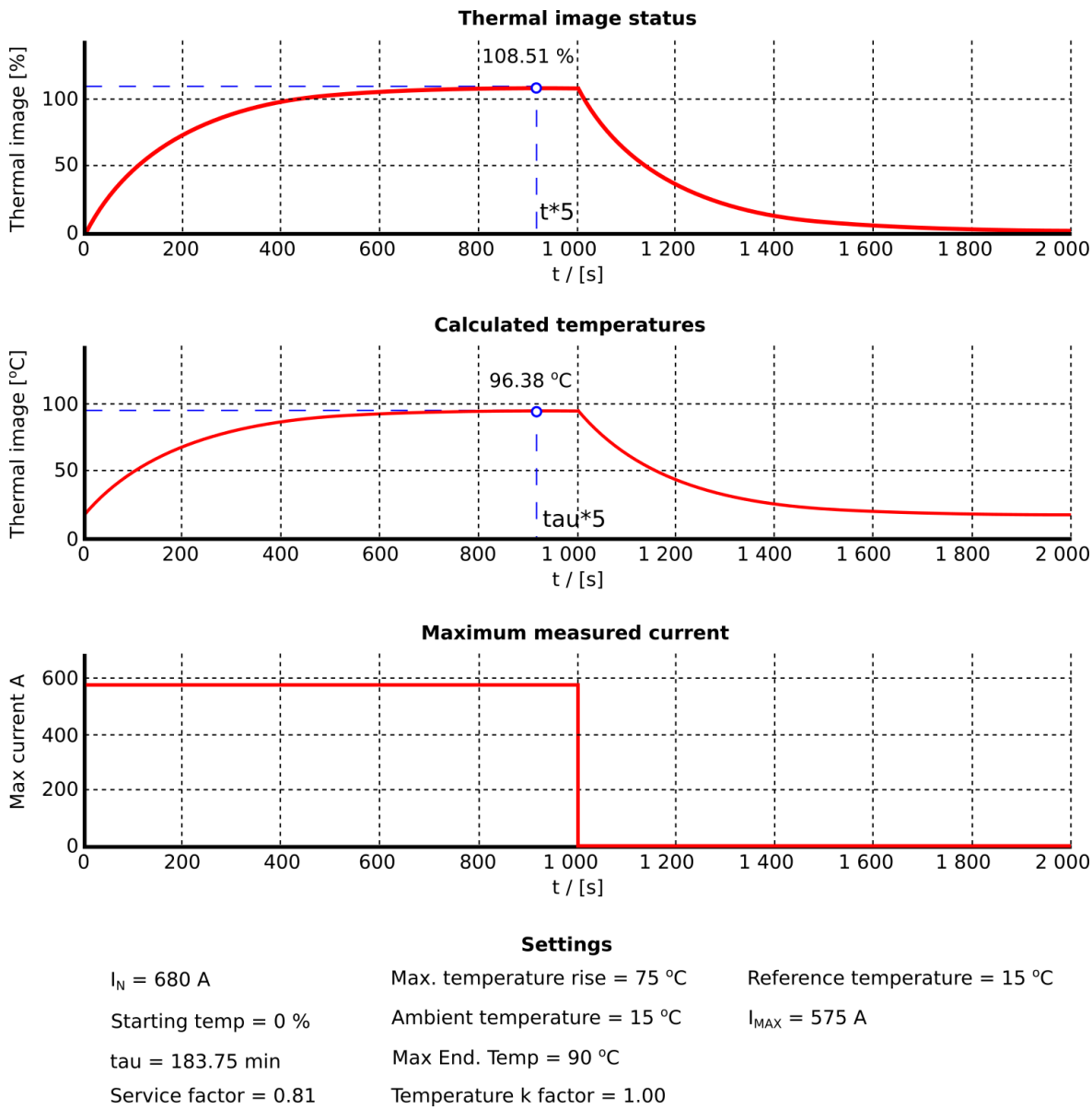

When trying to load the cable with the nominal current one can see the actual current-carrying capacity of the cable is much lower than in the presumptive conditions. A normal loading current can now warm up the cable too much and threaten its withstandability. If the k_{SF} had not been set, the thermal image would show a temperature of appr. 68 ˚C instead of the real temperature of 96 ˚C.

© Arcteq Relays Ltd
IM00014

Figure. 5.4.21 - 165. Thermal response with k_{SF} factor correctly set.

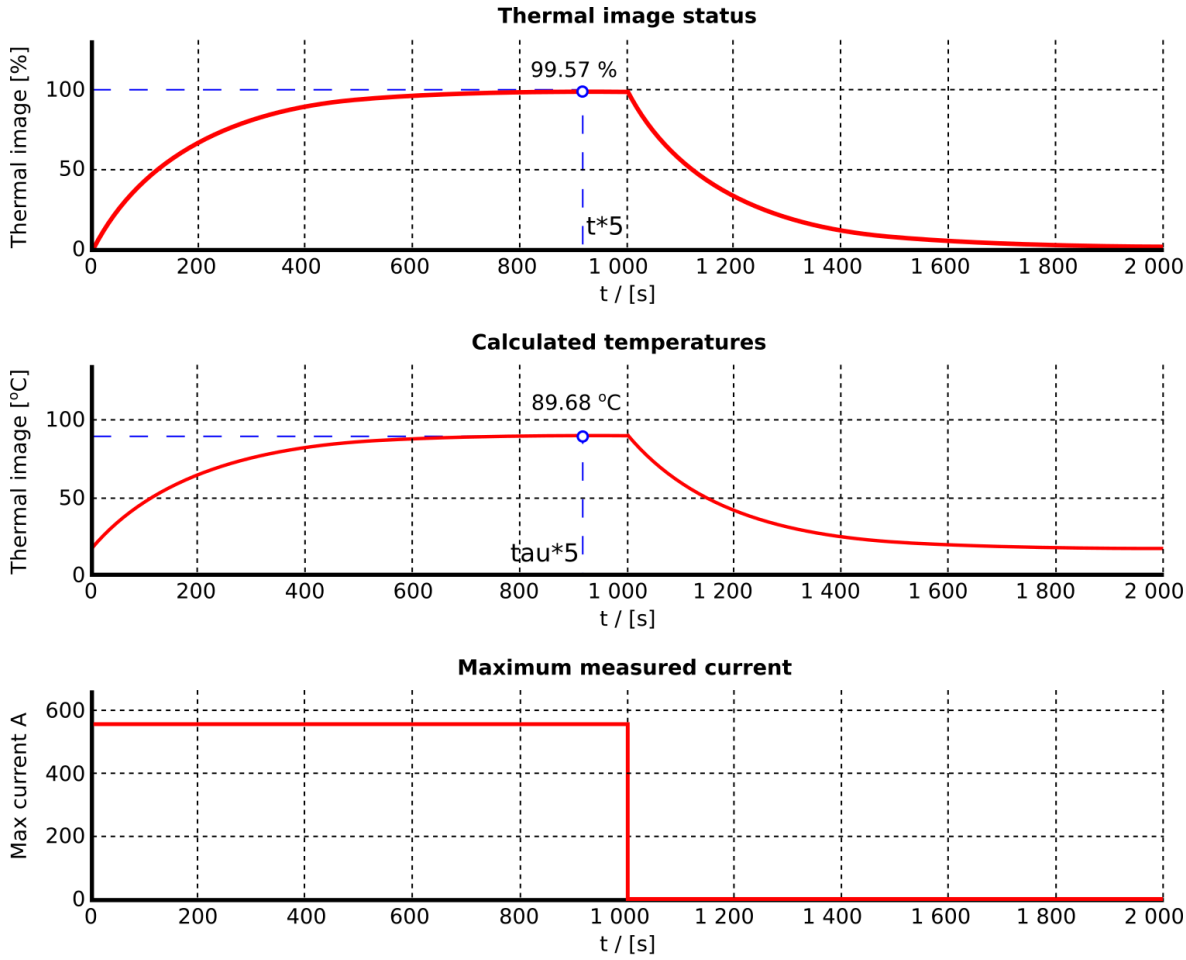

Settings

I_N = 680 A	Max. temperature rise = 75 °C	Reference temperature = 15 °C
Starting temp = 0 %	Ambient temperature = 15 °C	I_{MAX} = 550.8 A
tau = 183.75 min	Max End. Temp = 90 °C	
Service factor = 0.81	Temperature k factor = 1.00	

When the installation conditions vary from the presumptive conditions, the cable's current-carrying capacity can be reduced so that the temperature of 90 ˚C is achieved with a 550 A current instead of the 680 A current given in the initial data.

Estimating trip time

Calculated effective nominal current:

$I_N = k_{SF} \times tamb_{fact} \times I_{Nom}$

Where:

- I_N = calculated effective nominal current
- k_{SF} = the service factor
- k_{amb} = the ambient temperature factor
- I_{Nom} = the nominal current of the protected device

Calculated end heating:

$\theta_{End} = (I_{meas}/I_N)^2$

Where:

- I_{meas} = the measured current
- I_N = the calculated effective nominal current

Calculated time constant:

$\tau = e^{(-0.005[s] \times (Tc[min] \times 60)[s])}$

Where:

- e = Euler's number
- τ_c = the time constant set by the user
- 0.005s is the program cycle time

Calculated active thermal status:

$\theta_{Calc} = ((\theta_{-1} - \theta_{End}) \times \tau) + \theta_{End}$

Where:

- θ_{-1} = previous cycle calculation result (integrating function needs the memory to operate)
- θ_{End} = the calculated end heating (dependent on the measured current)
- τ = the calculated time constant

The tripping time can be calculated based on these previous calculations according to the following formula (the result in seconds). With this base information the tripping time can be calculated with the formula above (in seconds) when replacing the θ_{Calc} with the value of the thermal level which from the tripping time is wanted to be calculated (in per-unit value).

$$t_{est.\ trip} = l_n\left(\frac{I_{meas}{}^2 - (k_{fact} \times tamb_{fact} \times \sqrt{\theta_{Calc}} \times I_n)^2}{(I_{meas}{}^2 - I_n{}^2)}\right) \times \tau \times 60$$

Function inputs and outputs

The following figure presents a simplified function block diagram of the line thermal overload protection function.

© Arcteq Relays Ltd
IM00014

Figure. 5.4.21 - 166. Simplified function block diagram of the TF> function.

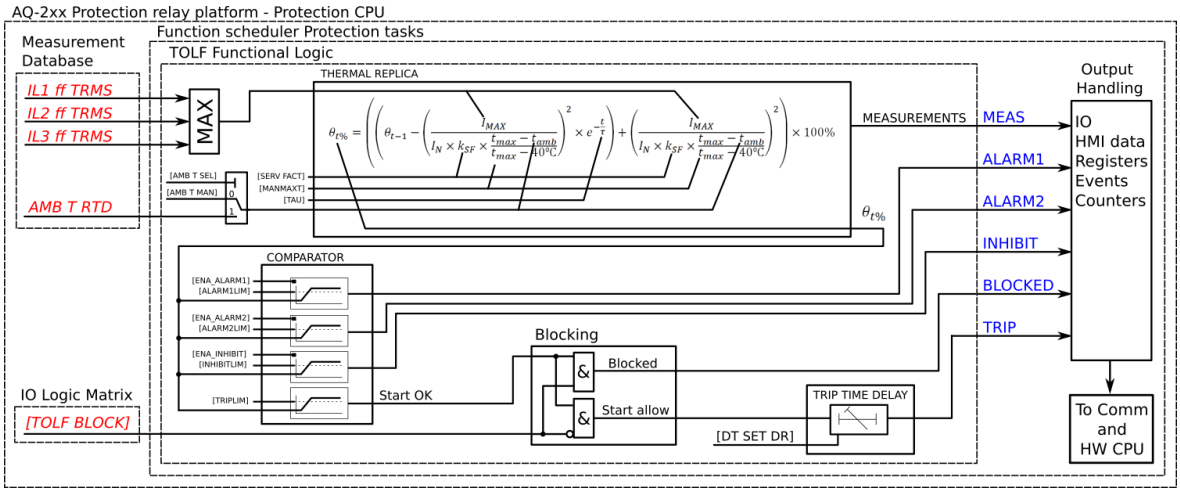

Measured input

The function block uses phase current measurement values. The function block uses TRMS values from the whole harmonic specter of 32 components. RTD input can be used for measuring ambient temperature.

Table. 5.4.21 - 175. Measurement inputs of the TF> function.

Signal	Description
I_{L1} TRMS	TRMS measurement of phase L1 (A) current
I_{L2} TRMS	TRMS measurement of phase L2 (B) current
I_{L3} TRMS	TRMS measurement of phase L3 (C) current
RTD	Temperature measurement for the ambient correction

Table. 5.4.21 - 176. General settings (not selectable under setting groups)

Name	Range	Default	Description
TF> mode	• Disabled • Activated	Disabled	The selection of the function is activated or disabled in the configuration. By default it is not in use.
TF> force status to	• Normal • Blocked • Alarm1 On • Alarm2 On • Inhibit On • Trip On	Normal	Force the status of the function. Visible only when *Enable stage forcing* parameter is enabled in *General* menu.
Temp C or F deg	• C • F	C	The selection of whether the temperature values of the thermal image and RTD compensation are shown in Celsius or in Fahrenheit.

Table. 5.4.21 - 177. Settings for thermal replica.

Name	Range	Step	Default	Description
IN thermal cap current	0.10…40.00xI_n	0.01xI_n	1.00xI_n	The current for the 100 % thermal capacity to be used (the pick-up current in p.u., with t_{max} achieved in time τ x 5).
Set or Estimate tau (t const)	• Set • Estimate	-	Set	The selection of the time constant setting. If "Set" is selected, the Tau (t const) setting is available and the time constant to be used can be set there. If "Estimate" is selected, the cable's initial data parameters are visible.
Tau (t const)	0.1…500.0min	0.1min	10.0min	The time constant setting. This time constant is used for heating and cooling of the protected object. This setting is visible if the "Set" is selected for the "Set or Estimate tau" setting.
Max. perm. OC. current (norm **ik**1s)	1…1 000 000A	1A	75 000A	The maximum-rated short-circuit current of the protected object (cable). Usually this value is presented as a one second value. This setting is visible if "Estimate" is selected for the "Set or Estimate tau" setting.
Max. OC. time (norm 1 s)	0.1…5s	0.1s	1.0s	The time of the maximum-rated short-circuit current of the protected object (usually 1 s). This setting is visible if "Estimate" is selected for the "Set or Estimate tau" setting.
Nominal current	1…1 000 000A	1A	700A	The rated nominal current in the primary value of the protected object under nominal-rated conditions. This setting is visible if "Estimate" is selected for the "Set or Estimate tau" setting.
Estimated tau	0…1800min	0.005min	191.3min (from defaults)	The estimated result which is used for the thermal replica's time constant. After the previous three required parameters are set the device will calculate this value. This setting is visible if "Estimate" is selected for the "Set or Estimate tau" setting.
k_{SF} (service factor)	0.01…5.00	0.01	1.00	The service factor which corrects the value of the maximum allowed current according to installation and other conditions varying from the presumptive conditions.
Cold reset default theta	0.0…150.0%	0.1%	60.0%	The thermal image status in the restart of the function/ device. The value is given in percentages of the used thermal capacity of the protected object. It is also possible to reset the thermal element. This parameter can be used when testing the function to manually set the current thermal cap to any value.

Table. 5.4.21 - 178. Environmental settings

Name	Range	Step	Default	Description
Object max. temp. (t_{max} = 100%)	0…500deg	1deg	90deg	The maximum allowed temperature for the protected object. The default suits for Celsius range and for PEX-insulated cables.

© Arcteq Relays Ltd
IM00014

Name	Range	Step	Default	Description
Ambient temp. sel.	• Manual set • RTD	-	Manual set	The selection of whether fixed or measured ambient temperature is used for the thermal image biasing.
Man. amb. temp. set.	0…500deg	1deg	15deg	The manual fixed ambient temperature setting for the thermal image biasing. Underground cables usually use 15 °C. This setting is visible if "Manual set" is selected for the "Ambient temp. sel." setting.
RTD amb. temp. read.	0…500deg	1deg	15deg	The RTD ambient temperature reading for the thermal image biasing. This setting is visible if "RTD" is selected for the "Ambient temp. sel." setting.
Ambient lin. or curve	• Linear est. • Set curve	-	Linear est.	The selection of how to correct the ambient temperature, either by internally calculated compensation based on end temperatures or by a user-settable curve. The default setting is "Linear est." which means the internally calculated correction for ambient temperature.
Temp. reference (t_{ref}) k_{amb}=1.0	-60…500deg	1deg	15deg	The temperature reference setting. The manufacturer's temperature presumptions apply and the thermal correction factor is 1.00 (rated temperature). For underground cables the set value for this is usually 15 ˚C and for cables in the air it is usually 25 ˚C. This setting is visible if "Ambient lin. or curve" is set to "Linear est."
Max. ambient temp.	0…500deg	1deg	45deg	The maximum ambient temperature setting. If the measured temperature is more than the maximum set temperature, the set correction factor for the maximum temperature is used. This setting is visible if "Ambient lin. or curve" is set to "Linear est."
k at max. amb. temp.	0.01…5.00xI_n	0.01xI_n	1.00xI_n	The temperature correction factor for the maximum ambient temperature setting. This setting is visible if "Ambient lin. or curve" is set to "Linear est."
Min. ambient temp.	-60…500deg	1deg	0deg	The minimum ambient temperature setting. If the measured temperature is below the minimum set temperature, the set correction factor for minimum temperature is used. This setting is visible if "Ambient lin. or curve" is set to "Linear est."
k at min. amb. temp.	0.01…5.00xI_n	0.01xI_n	1.00xI_n	The temperature correction factor for the minimum ambient temperature setting. This setting is visible if "Ambient lin. or curve" is set to "Linear est."
Amb. temp. ref. 1...10	-50.0…500.0deg	0.1deg	15deg	The temperature reference points for the user-settable ambient temperature coefficient curve. This setting is visible if "Ambient lin. or curve" is set to "Set curve".
Amb. temp. k1...k10	0.01…5.00	1.00	0.01	The coefficient value for the temperature reference point. The coefficient and temperature reference points must be set as pairs. This setting is visible if "Ambient lin. or curve" is set to "Set curve".

Name	Range	Step	Default	Description
Add curvepoint 3…10	• Not used • Used	-	Not used	The selection of whether or not the curve temperature/ coefficient pair is in use. The minimum number to be set for the temperature/coefficient curve is two pairs and the maximum is ten pairs. If the measured temperature is below the set minimum temperature reference or above the maximum set temperature reference, the used temperature coefficient is the first or last value in the set curve. This setting is visible if "Ambient lin. or curve" is set to "Set curve".

Pick-up settings

The operating characteristics of the machine thermal overload protection function are completely controlled by the thermal image. The thermal capacity value calculated from the thermal image can set the I/O controls with ALARM 1, ALARM 2, INHIBIT and TRIP signals.

Setting group selection controls the operating characteristics of the function, i.e. the user or user-defined logic can change function parameters while the function is running.

Table. 5.4.21 - 179. Pick-up settings.

Name	Range	Step	Default	Description
Enable TF> Alarm 1	• Disabled • Enabled	-	Disabled	Enabling/disabling the ALARM 1 signal and the I/O.
TF> Alarm 1 level	0.0…150.0%	0.1%	40%	ALARM 1 activation threshold.
Enable TF> Alarm 2	• Disabled • Enabled	-	Disabled	Enabling/disabling the ALARM 2 signal and the I/O.
TF> Alarm 2 level	0.0…150.0%	0.1%	40%	ALARM 2 activation threshold.
Enable TF> Rest Inhibit	• Disabled • Enabled	-	Disabled	Enabling/disabling the Restart Inhibit signal and the I/O.
TF> Inhibit level	0.0…150.0%	0.1%	80%	INHIBIT activation threshold.
TF> Trip level	0.0…150.0%	0.1%	100%	TRIP activation threshold.
TF> Trip delay	0.000…3600.000s	0.005s	0.000s	The trip signal's additional delay. This delay delays the trip signal generation by a set time. The default setting is 0.000 s which does not give an added time delay for the trip signal.

© Arcteq Relays Ltd
IM00014

Function blocking

The blocking signal is evaluated at the start of each program cycle. The blocking signals are connected to the function's dedicated input, which can be configured in the *IO → Blocking Input Control* tab of the function.

- When the pick-up element activates and the blocking signal is not active, a START signal is generated, and the function starts or continues with the trip time countdown.
- When the pick-up element activates and the blocking signal is active, a BLOCKED signal is generated, and the function does not process the event further.
- When a START signal is already active and the blocking input signal becomes active, the START signal is reset and BLOCKED signal is generated. The release time characteristics are then processed in the same way as when the pick-up signal is reset.

The blocking signal needs to reach the device minimum of 5 ms before the set operating delay has passed in order for the blocking to activate in time.

Measurements and indications

The function outputs measured process data from the following magnitudes:

Table. 5.4.21 - 180. General status codes.

Name	Range	Description
TF> Condition	• Normal • Alarm 1 ON • Alarm 2 ON • Inhibit ON • Trip ON • Blocked	The function's operating condition at the moment considering binary IO signal status. No outputs are controlled when the status is "Normal".
Thermal status	• Light / No load • High overload • Overloading • Load normal	The function's thermal image status. When the measured current is below 1 % of the nominal current, the status "Light/No load" is shown. When the measured current is below the trip limit, the status "Load normal" is shown. When the measured current is above the pick-up limit but below 2 x I_n , the status "Overloading" is shown. When the measured current is above 2 x I_n, the status "High overload" is shown.
TF> Setting alarm	• SF setting ok • Service factor set fault. Override to 1.0	Indicates if SF setting has been set wrong and the actually used setting is 1.0. Visible only when there is a setting fault.
TF> Setting alarm	• Ambient setting ok • Ambient t set fault. Override to 1.0	Indicates if ambient temperature settings have been set wrong and actually used setting is 1.0. Visible only when there is a setting fault.

Name	Range	Description
TF> Setting alarm	• Nominal current calc ok • Nominal current set fault. Override to 1.0	Indicates if nominal current calculation is set wrong and actually used setting is 1.0. Visible only when there is a setting fault.
TF> Setting alarm	• Ambient setting ok • Inconsistent setting of ambient k	Indicates if ambient k setting has been set wrong. Visible only when there is a setting fault.

Table. 5.4.21 - 181. Measurements.

Name	Range	Description/values
Currents	• Primary A • Secondary A • Per unit	The active phase current measurement from IL1 (A), IL2 (B) and IL3 (C) phases in given scalings.
Thermal image	Thermal image calc.	- TF> Trip expect mode: No trip expected/Trip expected - TF> Time to 100 % theta: Time to reach the 100 % thermal cap - TF> Rreference T curr.: reference/pick-up value (IEQ) - TF> Active meas. curr.: the measured maximum TRMS current at a given moment - TF> T est. with act. curr.: estimation of the used thermal capacity including the current at a given moment - TF> T at a given moment: the thermal capacity used at that moment
	Temp. estimates	- TF> Used k for amb. temp: the ambient correction factor at a givenmoment - TF> Max. temp. rise all.: the maximum allowed temperature rise - TF> Temp. rise atm: the calculated temperature rise at a given moment - TF> Hot spot estimate: the estimated hot spot temperature including the ambient temperature - TF> Hot spot max. all.: the maximum allowed temperature for the object
	Timing status	- TF> Trip delay remaining: the time to reach 100% theta - TF> Trip time to rel.: the time to reach theta while staying below the trip limit during cooling - TF> Alarm 1 time to rel.: the time to reach theta while staying below the Alarm 1 limit during cooling - TF> Alarm 2 time to rel.: the time to reach theta while staying below the Alarm 2 limit during cooling - TF> Inhibit time to rel.: the time to reach theta while staying below the Inhibit limit during cooling

Table. 5.4.21 - 182. Counters.

Name	Description / values
Alarm1 inits	The number of times the function has activated the Alarm 1 output
Alarm2 inits	The number of times the function has activated the Alarm 2 output

© Arcteq Relays Ltd
IM00014

Name	Description / values
Restart inhibits	The number of times the function has activated the Restart inhibit output
Trips	The number of times the function has tripped
Trips Blocked	The number of times the function trips has been blocked

Events and registers

The line thermal overload protection function (abbreviated "TOLF" in event block names) generates events and registers from the status changes in the events listed below. The user can select which event messages are stored in the main event buffer: ON, OFF, or both. The events triggered by the function are recorded with a time stamp.

The function's outputs can be used for direct I/O controlling and user logic programming. The function also provides a resettable cumulative counter for the ALARM, INHIBIT, TRIP and BLOCKED events.

Table. 5.4.21 - 183. Event messages.

Event block name	Event names
TOLF1	Alarm1 ON/OFF
TOLF1	Alarm2 ON/OFF
TOLF1	Inhibit ON/OFF
TOLF1	Trip ON/OFF
TOLF1	Block ON/OFF

The function registers its operation into the last twelve (12) time-stamped registers. The register of the function records the ON event process data for TRIP or BLOCKED. The table below presents the structure of the function's register content.

Table. 5.4.21 - 184. Register content.

Name	Description
Date and time	dd.mm.yyyy hh:mm:ss.mss
Event	Event name
Time to reach 100 % theta	seconds
Ref. T current	x I_n
Active meas. current	x I_n
T at a given moment	%
Max. temp. rise allowed	degrees
Temp. rise at a given moment	degrees
Hot spot estimate	degrees

Name	Description
Hot spot maximum allowed	degrees
Trip delay rem.	seconds
Setting group in use	Setting group 1...8 active

5.4.22 Resistance temperature detectors (RTD)

Resistance temperature detectors (or RTDs) can be used to measure both temperatures of motors/generators and ambient temperatures. Typically an RTD is a thermocouple or of type PT100. Up to three (3) separate RTD modules based on an external Modbus are supported; each can hold up to eight (8) measurement elements. Up to two (2) separate RTD option cards are supported by this function. Sixteen (16) individual element monitors can be set for this alarm function, and each of those can be set to alarm two (2) separate alarms from one selected input. The user can set alarms and measurements to be either in degrees Celsius or Fahrenheit.

Figure. 5.4.22 - 167. Simplified function block diagram of the resistance temperature detection function.

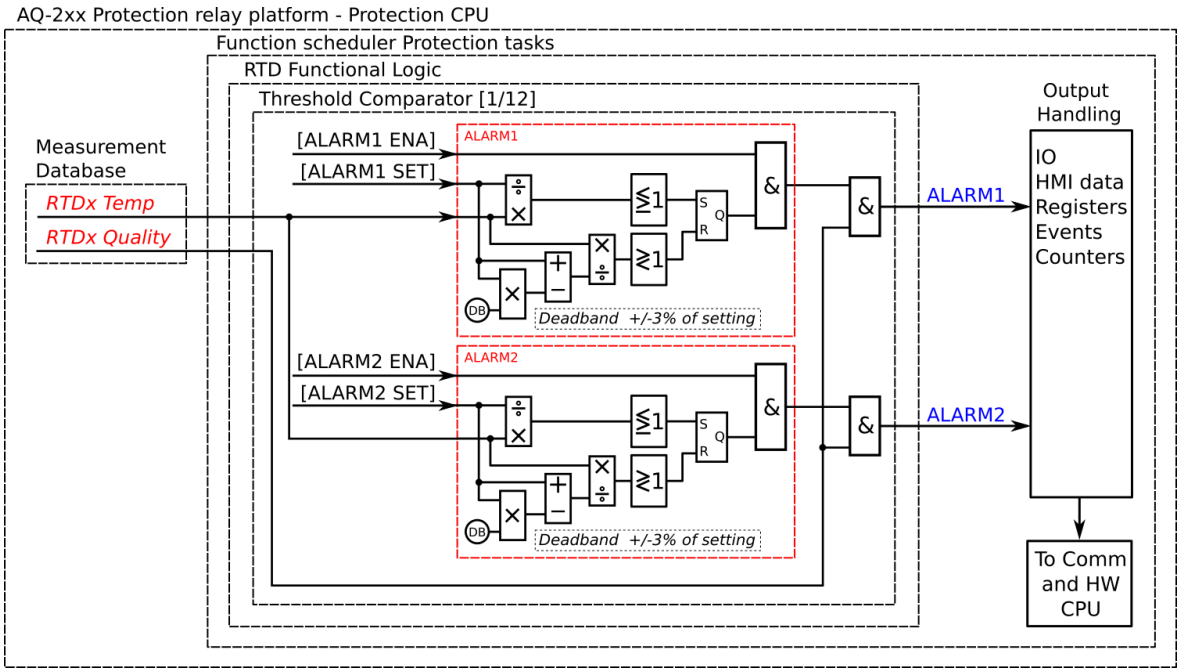

Settings

Setting up an RTD measurement, the user first needs to set the measurement module to scan the wanted RTD elements. A multitude of Modbus-based modules are supported. Communication requires bitrate, databits, parity, stopbits and Modbus I/O protocol to be set; this is done at *Communication → Connections*. Once communication is set, the wanted channels are selected at *Communication → Protocols → ModbusIO*. Then the user selects the measurement module from the three (3) available modules (A, B and C), as well as the poll address. Additionally, both the module type and the polled channels need to be set. When using a thermocouple module, the thermo element type also needs to be set for each of the measurement channels. Once these settings are done the RTDs are ready for other functions.

© Arcteq Relays Ltd
IM00014

Table. 5.4.22 - 185. Function settings for Channel x (Sx).

Name	Range	Step	Default	Description
S1...S16 enable	No Yes	-	No	Enables/disables the selecion of sensor measurements and alarms.
S1...S16 module	• InternalRTD1 • InternalRTD2 • ExtModuleA • ExtModuleB • ExtModuleC	-	InternalRTD1	Selects the measurement module. Internal RTD modules are option cards installed to the device. External modules are Modbus based external devices.
S1...S16 channel	• Channel 0 • Channel 1 • Channel 2 • Channel 3 • Channel 4 • Channel 5 • Channel 6 • Channel 7	-	Channel 0	Selects the measurement channel in the selected module.
S1...S16 Deg C/Dec F	• Deg C • Deg F	-	Deg C	Selects the measurement temperature scale (Celsius or Fahrenheit).
S1...S16 Measurement	-	-	-	Displays the measurement value in the selected temperature scale.
S1...S16 Sensor	• Ok • Invalid	-	-	Displays the measured sensor's data validity. If the sensor reading has any problems, the sensor data is set to "Invalid" and the alarms are not activated.
S1...S16 Enable alarm 1	• Disable • Enable	-	Disable	Enables/disables the selection of Alarm 1 for the measurement channel x.
S1...S16 Alarm1 >/<	• > • <	-	>	Selects whether the alarm activates when measurement is above or below the pick-up setting value.
S1...S16 Alarm1	-101.0…2000.0deg	0.1deg	0.0deg	Sets the pick-up value for Alarm 1. The alarm is activated if the measurement goes above or below this setting mode (depends on the selected mode in "Sx Alarm1 >/<").
S1...S16 sensor	• Ok • Invalid	-	-	Displays the measured sensor's data validity. If the sensor reading has any problems, the sensor data is set to "Invalid" and the alarms are not activated.
S1...S16 Enable alarm 2	• Disable • Enable	-	Disable	Enables/disables the selection of Alarm 2 for the measurement channel x.
S1...S16 Alarm2 >/<	• >> • <	-	>	Selects whether the measurement is above or below the setting value.
S1...S16 Alarm2	-101.0…2000.0deg	0.1deg	0.0deg	Sets the value for Alarm 2. The alarm is activated if the measurement goes above or below this setting mode (depends on the selected mode in "Sx Alarm2 >/<").

Function can be set to monitor the measurement data from previously set RTD channels. A single channel can be set to have several alarms if the user sets the channel to multiple sensor inputs. In each sensor setting the user can select the monitored module and channel, as well as the monitoring and alarm setting units (°C or °F). The alarms can be enabled, given a setting value (in degrees), and be set to trigger either above or below the setting value. There are sixteen (16) available sensor inputs in the function. An active alarm requires a valid channel measurement. It can be invalid if communication is not working or if a sensor is broken.

When the RTDs have been set, the values can be read to SCADA (or some other control system). The alarms can also be used for direct output control as well as in logics.

Events

The resistance temperature detector function (abbreviated "RTD" in event block names) generates events and registers from the status changes in the events listed below. The user can select which event messages are stored in the main event buffer: ON, OFF, or both. The events triggered by the function are recorded with a time stamp.

The function's outputs can be used for direct I/O controlling and user logic programming. The function also provides a resettable cumulative counter for the ALARM events.

The function offers sixteen (16) independent stages; the events are segregated for each stage operation.

Table. 5.4.22 - 186. Event messages.

Event block name	Event names
RTD1	S1...S16 Alarm1 ON/OFF
RTD1	S1...S16 Alarm2 ON/OFF
RTD1	S1...S16 Meas Ok/Invalid

5.4.23 Arc fault protection (IArc>/I0Arc>; 50Arc/50NArc)

Arc faults occur for a multitude of reasons: e.g. insulation failure, incorrect operation of the protected device, corrosion, overvoltage, dirt, moisture, incorrect wiring, or even because of aging caused by electric load. It is important to detect the arc as fast as possible in order to minimize its effects. Using arc sensors to detect arc faults is much faster than merely measuring currents and voltages. In busbar protection devices with normal protection can be too slow to disconnect arcs within a safe time frame. For example, it may be necessary to delay operation time for hundreds of milliseconds when setting up an overcurrent protection relay to control the feeder breakers to achieve selectivity. This delay can be avoided by using arc protection. The arc protection card has a high-speed output to trip signals faster as well as to extend the speed of arc protection.

© Arcteq Relays Ltd
IM00014

Figure. 5.4.23 - 168. Protection device equipped with arc protection.

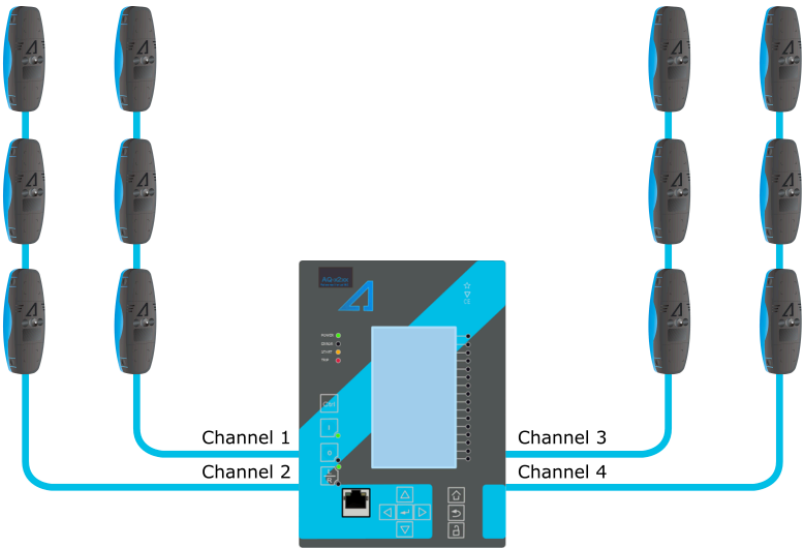

The arc protection card has four (4) sensor channels, and up to three (3) arc point sensors can be connected to each channel. The sensor channels support Arcteq AQ-01 (light sensing) and AQ-02 (pressure and light sensing) units. Optionally, the protection function can also be applied with a phase current or a residual current condition: the function trips only if the light and overcurrent conditions are met.

Table. 5.4.23 - 187. Output signals of the IArc>/I0Arc> function.

Outputs	Activation condition
Channel 1 Light In Channel 2 Light In Channel 3 Light In Channel 4 Light In	The arc protection card's sensor channel detects light.
Channel 1 Pressure In Channel 2 Pressure In Channel 3 Pressure In Channel 4 Pressure In	The arc protection card's sensor channel detects pressure.
ARC Binary input signal	The arc protection card's binary input is energized.
I/I0 Arc> Ph. curr. START I/I0 Arc> Res. curr. START	The measured phase current or the residual current is over the set limit.
I/I0 Arc> Ph. curr. BLOCKED I/I0 Arc> Res. curr. BLOCKED	The phase current or the residual current measurement is blocked by an input.
I/I0 Arc> Zone 1 TRIP I/I0 Arc> Zone 2 TRIP I/I0 Arc> Zone 3 TRIP I/I0 Arc> Zone 4 TRIP	All required conditions for tripping the zone are met (light OR light and current).

Outputs	Activation condition
I/I0 Arc> Zone 1 BLOCKED I/I0 Arc> Zone 2 BLOCKED I/I0 Arc> Zone 3 BLOCKED I/I0 Arc> Zone 4 BLOCKED	All required conditions for tripping the zone are met (light OR light and current) but the tripping is blocked by an input.
I/I0 Arc> S1 Sensor fault I/I0 Arc> S2 Sensor fault I/I0 Arc> S3 Sensor fault I/I0 Arc> S4 Sensor fault	The detected number of sensors in the channel does not match the settings.
I/I0 Arc> IO unit fault	The number of connected AQ-100 series units does not match the number of units set in the settings.

Example of scheme setting

The following examples helps the user better understand how the arc protection function is set. In the examples AQ-101 models are used to extend the protection of Zone 2 and to protect each outgoing feeder (Zone 3).

This scheme is a single-line diagram with AQ-200 series devices and with AQ-101 arc protection relays. The settings are for an incoming feeder AQ-200 device.

© Arcteq Relays Ltd
IM00014

Figure. 5.4.23 - 169. Scheme with AQ-101 arc protection relays.

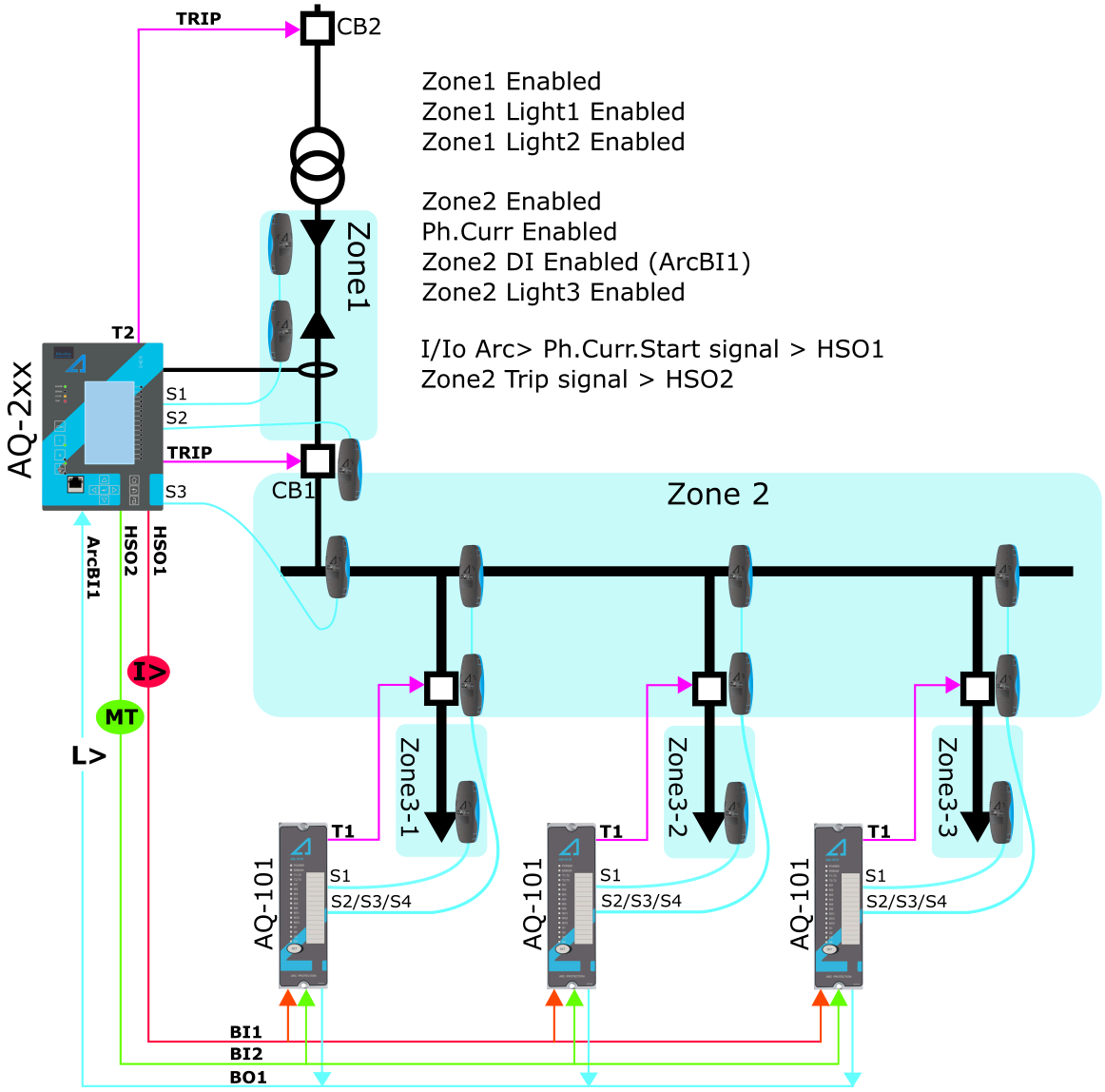

To set the zones for the AQ-200 models sensor channels start by enabling the protected zones (in this case, Zones 1 and 2). Then define which sensor channels are sensing which zones (in this case, sensor channels S1 and S2 are protecting Zone 1). Enable Light 1 of Zone 1 as well as Light 2 of Zone 2. The sensor channel S3 deals with Zone 2. Enable Light 3 of Zone 2. The high-speed output contacts HSO1 and HSO2 have been set to send overcurrent and master trip signals to the AQ-101 arc protection relays. The AQ-100 series units send out test pulses in specific intervals to check the health of the wiring between the AQ-100 series units. The parameter *I/I0 Arc> Self supervision test pulse* should be activated when connecting the AQ-100 series units to the AQ-200 series arc protection card to prevent the pulses from activating ArcBI1.

The next example is almost like the previous one: it is also a single-line diagram with AQ 200 series devices. However, this time each outgoing feeder has an AQ-200 protection device instead of an AQ-101 arc protection relay.

Figure. 5.4.23 - 170. Scheme with AQ-200 protection devices.

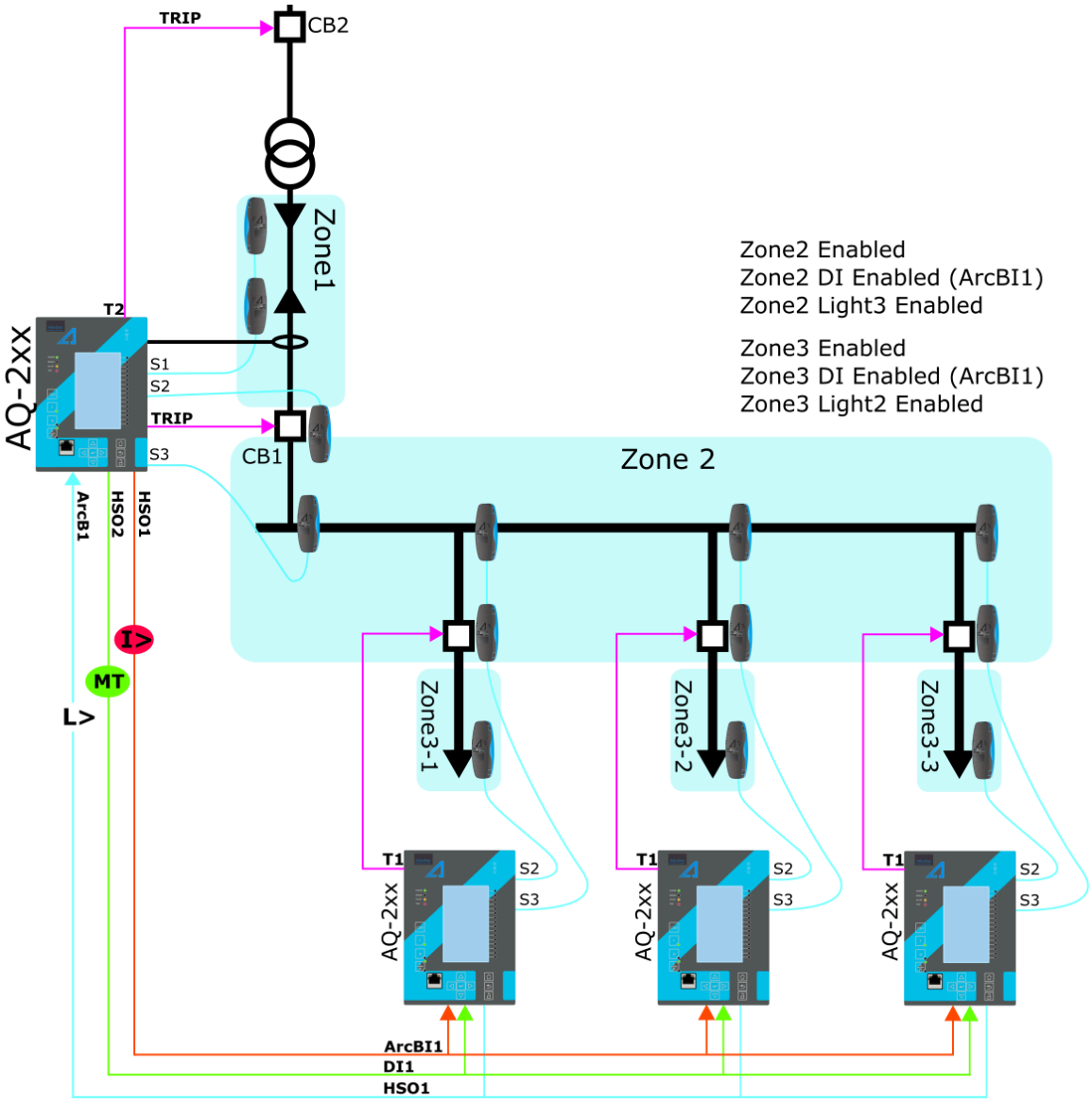

The settings for the device supervising the incoming feeder are the same as in the first example. The devices supervising the busbar and the outgoing feeder, however, have a different setting. Both Zones 2 and 3 need to be enabled as there are sensors connected to both Zone 2 and 3 starts. Sensors connected to the channel S3 are in Zone 2. Then enable Light 3 of Zone 2. The sensor connected to the channel S2 is in Zone 3. Then enable Light 2 of Zone 3.

If any of the channels have a pressure sensing sensor, enable it the same way as the regular light sensors. If either phase overcurrent or residual overcurrent is needed for the tripping decision, they can be enabled in the same way as light sensors in the zone. When a current channel is enabled, the measured current needs to be above the set current limit in addition to light sensing.

Measured input

Arc protection uses samples based on current measurements. If the required number of samples is found to be above the setting limit, the current condition activates. The arc protection can use either phase currents, residual currents or both.

© Arcteq Relays Ltd
IM00014

Table. 5.4.23 - 188. Measurement inputs of the U1/U2>/< function.

Signal	Description
I_{L1} samples	Samples received by I_{L1} current measurement channel
I_{L2} samples	Samples received by I_{L2} current measurement channel
I_{L3} samples	Samples received by I_{L3} current measurement channel
I_{01} samples	Samples received by I_{01} current measurement channel
I_{02} samples	Samples received by I_{02} current measurement channel

General settings

The following general settings define the general behavior of the function. These settings are static i.e. it is not possible to change them by editing the setting group.

Table. 5.4.23 - 189. General settings of the function.

Name	Range	Default	Description
I/I0 Arc> force status to	• Normal • PH curr blocked • PH curr Start • ResCurr Blocked • ResCurr Start • Zone 1 Trip • Zone1 Blocked • Zone2 Trip • Zone2 Blocked • Zone3 Trip • Zone3 Blocked • Zone4 Trip • Zone4 Blocked	Normal	Force the status of the function. Visible only when *Enable stage forcing* parameter is enabled in *General* menu.
Channel 1 sensors	• No sensors • 1 sensor • 2 sensors • 3 sensors	No sensors	Defines the number of sensors connected to the channel (channels 1/2/3/4).
Channel 2 sensors			
Channel 3 sensors			
Channel 4 sensors			

Name	Range	Default	Description
Channel 1 sensor status	• Sensors OK • Configuration fault state	-	Displays the status of the sensor channel. If the number of sensors connected to the channel does not match with the set "Channel 1/2/3/4 sensors" setting, this parameter will go to the "Configuration fault" state.
Channel 2 sensor status			
Channel 3 sensor status			
Channel 4 sensor status			

Pick-up settings

The pick-up of each zone of the Iarc>/I0arc> function is controlled by one of the following: the phase current pick-up setting, the residual current pick-up setting, or the sensor channels. The pick-up setting depends on which of these are activated in the zone.

Setting group selection controls the operating characteristics of the function, i.e. the user or user-defined logic can change function parameters while the function is running.

Table. 5.4.23 - 190. Enabled Zone pick-up settings.

Name	Range	Step	Default	Description
Phase current pick-up	0.05...40.00 x I_n	0.01 x I_n	1.2 x I_n	The phase current measurement's pick-up value (in p.u.).
I0 input selection	• None • I01 • I02	-	None	Selects the residual current channel (I01 or I02).
Res.current pick-up	0.05...40.00 x I_{0n}	0.01 x I_{0n}	1.2 x I_{0n}	The residual current measurement's pick-up value (in p.u.).
Zone1/2/3/4 Enabled	• Disabled • Enabled	-	Disabled	Enables the chosen zone. Up to 4 zones can be enabled.
Zone1/2/3/4 Ph. curr. Enabled	• Disabled • Enabled	-	Disabled	The phase overcurrent allows the zone to trip when light is detected.
Zone1/2/3/4 Res. curr. Enabled	• Disabled • Enabled	-	Disabled	The residual overcurrent allows the zone to trip when light is detected.

© Arcteq Relays Ltd
IM00014

Name	Range	Step	Default	Description
Zone1/2/3/4 Light 1 Enabled	• Disabled • Enabled	-	Disabled	Light detected in sensor channel 1 trips the zone.
Zone1/2/3/4 Light 2 Enabled	• Disabled • Enabled	-	Disabled	Light detected in sensor channel 2 trips the zone.
Zone1/2/3/4 Light 3 Enabled	• Disabled • Enabled	-	Disabled	Light detected in sensor channel 3 trips the zone.
Zone1/2/3/4 Light 4 Enabled	• Disabled • Enabled	-	Disabled	Light detected in sensor channel 4 trips the zone.
Zone1/2/3/4 Pres. 1 Enabled	• Disabled • Enabled	-	Disabled	Pressure detected in sensor channel 1 trips the zone.
Zone1/2/3/4 Pres. 2 Enabled	• Disabled • Enabled	-	Disabled	Pressure detected in sensor channel 2 trips the zone.
Zone1/2/3/4 Pres. 3 Enabled	• Disabled • Enabled	-	Disabled	Pressure detected in sensor channel 3 trips the zone.
Zone1/2/3/4 Pres. 4 Enabled	• Disabled • Enabled	-	Disabled	Pressure detected in sensor channel 4 trips the zone.
Zone1/2/3/4 DI Enabled	• Disabled • Light In • Current In	-	Disabled	Arc protection option card digital input function selection. "Light In" mode trips the zone when digital input is active. In "Current In" mode digital input must be active at the same time as any of the sensor channels for the zone to trip.

Read-only parameters

The function's *Info* page displays useful, real-time information on the state of the protection function. It is accessed either through the device's HMI display, or through the setting tool software when it is connected to the device and its Live Edit mode is active.

Table. 5.4.23 - 191. Information displayed by the function.

Name	Range	Description
I/I0 Arc> condition	• Z1 Trip • Z1 Blocked • Z2 Trip • Z2 Blocked • Z3 Trip • Z3 Blocked • Z4 Trip • Z4 Blocked	Displays status of the protection function.

Sensor status	• Ph Curr Blocked • Ph Curr Start • Res Curr Blocked • Res Curr Start • Channel1 Light • Channel1 Pressure • Channel2 Light • Channel2 Pressure • Channel3 Light • Channel3 Pressure • Channel4 Light • Channel4 Pressure • Digital input • I/I0 Arc> Sensor 1 Fault • I/I0 Arc> Sensor 2 Fault • I/I0 Arc> Sensor 3 Fault • I/I0 Arc> Sensor 4 Fault • I/I0 Arc> I/O-unit Fault	Displays the general status of sensors.

Function blocking

The block signal is checked in the beginning of each program cycle. The blocking signal is received from the blocking matrix in the function's dedicated input. If the blocking signal is not activated when the pick-up element activates, a TRIP signal is generated.

If the blocking signal is active when the pick-up element activates, a BLOCKED signal is generated and the function does not process the situation further.

The variables the user can set are binary signals from the system. The blocking signal needs to reach the device minimum of 5 ms before the set operating delay has passed in order for the blocking to activate in time.

Events and registers

The arc fault protection function (abbreviated "ARC" in event block names) generates events and registers from the status changes in the events listed below. The user can select which event messages are stored in the main event buffer: ON, OFF, or both. The events triggered by the function are recorded with a time stamp.

The function's outputs can be used for direct I/O controlling and user logic programming. The function also provides a resettable cumulative counter for the events.

Table. 5.4.23 - 192. Event messages.

Event block name	Event names
ARC1	Zone 1...4 Trip ON/OFF
ARC1	Zone 1...4 Block ON/OFF
ARC1	Phase current Blocked ON/OFF
ARC1	Phase current Start ON/OFF
ARC1	Residual current Blocked ON/OFF
ARC1	Residual current Start ON/OFF
ARC1	Channel 1...4 Light ON/OFF

© Arcteq Relays Ltd
IM00014

Event block name	Event names
ARC1	Channel 1...4 Pressure ON/OFF
ARC1	DI Signal ON/OFF
ARC1	I/I0 Arc> Sensor 1...4 Fault ON/OFF
ARC1	I/I0 Arc> I/O-unit Fault ON/OFF

The function registers its operation into the last twelve (12) time-stamped registers. The table below presents the structure of the function's register content.

Table. 5.4.23 - 193. Register content.

Register	Description
Date and time	dd.mm.yyyy hh:mm:ss.mss
Event	Event name
Phase A current	Trip current
Phase B current	
Phase C current	
Residual current	
Active sensors	1...4
Setting group in use	Setting group 1...8 active

5.4.24 Programmable stage (PSx>/<; 99)

The programmable stage is a stage that the user can program to create more advanced applications, either as an individual stage or together with programmable logic. The device has ten programmable stages, and each can be set to follow one to three analog measurements. The programmable stages have three available pick up terms options: overX, underX and rate-of-change of the selected signal. Each stage includes a definite time delay to trip after a pick-up has been triggered.

The programmable stage cycle time is 5 ms. The pick-up delay depends on which analog signal is used as well as its refresh rate (typically under a cycle in a 50 Hz system).

The number of programmable stages to be used is set in the *INFO* tab. When this function has been set as "Activated", the number of programmable stages can be set anywhere between one (1) and ten (10) depending on how many the application needs. In the image below, the number of programmable stages have been set to two which makes PS1 and PS2 to appear. Inactive stages are hidden until they are activated.

Please note that setting the number of available stages does not activate those stages, as they also need to be enabled individually with the *PSx >/< Enabled* parameter. When enabled an active stage shows its current state (condition), the expected operating time and the time remaining to trip under the activation parameters. If a stage is not active the *PSx>/< condition* parameter will merely display “Disabled”.

Setting group selection controls the operating characteristics of the function, i.e. the user or user-defined logic can change function parameters while the function is running.

Analog values

The numerous analog signals have been divided into categories to help the user find the desired value.

Table. 5.4.24 - 194. Phase and residual current measurements (IL1, IL2, IL3, Io1 and Io2)

Name	Description
ILx ff (p.u.)	Fundamental frequency RMS value (in p.u.)
ILx 2nd h.	ILx 2nd harmonic value (in p.u.)
ILx 3rd h.	ILx 3nd harmonic value (in p.u.)
ILx 4th h.	ILx 4nd harmonic value (in p.u.)
ILx 5th h.	ILx 5nd harmonic value (in p.u.)
ILx 7th h.	ILx 7nd harmonic value (in p.u.)
ILx 9th h.	ILx 9nd harmonic value (in p.u.)
ILx 11th h.	ILx 11nd harmonic value (in p.u.)
ILx 13th h.	ILx 13nd harmonic value (in p.u.)
ILx 15th h.	ILx 15nd harmonic value (in p.u.)
ILx 17th h.	ILx 17nd harmonic value (in p.u.)
ILx 19th h.	ILx 19nd harmonic value (in p.u.)
ILx TRMS	ILx TRMS value (in p.u.)
ILx Ang	ILx Angle (degrees)

Table. 5.4.24 - 195. Other current measurements

Name	Description
I0Z Mag	Zero sequence current value (in p.u.)
I0CALC Mag	Calculated I0 value (in p.u.)
I1 Mag	Positive sequence current value (in p.u.)
I2 Mag	Negative sequence current value (in p.u.)
I0CALC Ang	Angle of calculated residual current (degrees)
I1 Ang	Angle of positive sequence current (degrees)
I2 Ang	Angle of negative sequence current (degrees)
I01ResP	I01 primary current of a current-resistive component
I01CapP	I01 primary current of a current-capacitive component

© Arcteq Relays Ltd
IM00014

Name	Description
I01ResS	I01 secondary current of a current-resistive component
I01CapS	I01 secondary current of a current-capacitive component
I02ResP	I02 primary current of a current-resistive component
I02CapP	I02 primary current of a current-capacitive component
I02ResS	I02 secondary current of a current-resistive component
I02CapS	I02 secondary current of a current-capacitive component

Table. 5.4.24 - 196. Voltage measurements

Name	Description
UL12Mag	UL12 Primary voltage V
UL23Mag	UL23 Primary voltage V
UL31Mag	UL31 Primary voltage V
UL1Mag	UL1 Primary voltage V
UL2Mag	UL2 Primary voltage V
UL3Mag	UL3 Primary voltage V
UL12Ang	UL12 angle (degrees)
UL23Ang	UL23 angle (degrees)
UL31Ang	UL31 angle (degrees)
UL1Ang	UL1 angle (degrees)
UL2Ang	UL2 angle (degrees)
UL3Ang	UL3 angle (degrees)
U0Ang	UL0 angle (degrees)
U0CalcMag	Calculated residual voltage
U1 pos.seq.V Mag	Positive sequence voltage
U2 neg.seq.V Mag	Negative sequence voltage
U0CalcAng	Calculated residual voltage angle (degrees)
U1 pos.seq.V Ang	Positive sequence voltage angle (degrees)
U2 neg.seq.V Ang	Negative sequence voltage angle (degrees)

Table. 5.4.24 - 197. Power measurements

Name	Description
S3PH	Three-phase apparent power S (kVA)
P3PH	Three-phase active power P (kW)
Q3PH	Three-phase reactive power Q (kvar)
tanfi3PH	Three-phase active power direction
cosfi3PH	Three-phase reactive power direction
SLx	Phase apparent power L1 / L2 / L3 S (kVA)
PLx	Phase active power L1 / L2 / L3 P (kW)
QLx	Phase reactive power L1 / L2 / L3 Q (kVar)
tanfiLx	Phase active power direction L1 / L2 / L3
cosfiLx	Phase reactive power direction L1 / L2 / L3

Table. 5.4.24 - 198. Phase-to-phase and phase-to-neutral impedances, resistances and reactances

Name	Description
RLxPri	Resistance R L12, L23, L31, L1, L2, L3 primary (Ω)
XLxPri	Reactance X L12, L23, L31, L1, L2, L3 primary (Ω)
ZLxPri	Impedance Z L12, L23, L31, L1, L2, L3 primary (Ω)
RLxSec	Resistance R L12, L23, L31, L1, L2, L3 secondary (Ω)
XLxSec	Reactance X L12, L23, L31, L1, L2, L3 secondary (Ω)
ZLxSec	Impedance Z L12, L23, L31, L1, L2, L3 secondary (Ω)
ZLxAngle	Impedance Z L12, L23, L31, L1, L2, L3 angle

Table. 5.4.24 - 199. Other impedances, resistances and reactances

Name	Description
RSeqPri	Positive Resistance R primary (Ω)
XSeqPri	Positive Reactance X primary (Ω)
RSeqSec	Positive Resistance R secondary (Ω)
XSeqSec	Positive Reactance X secondary (Ω)
ZSeqPri	Positive Impedance Z primary (Ω)
ZSeqSec	Positive Impedance Z secondary (Ω)
ZSeqAngle	Positive Impedance Z angle

© Arcteq Relays Ltd
IM00014

Table. 5.4.24 - 200. Conductances, susceptances and admittances (L1, L2, L3)

Name	Description
GLxPri	Conductance G L1, L2, L3 primary (mS)
BLxPri	Susceptance B L1, L2, L3 primary (mS)
YLxPriMag	Admittance Y L1, L2, L3 primary (mS)
GLxSec	Conductance G L1, L2, L3 secondary (mS)
BLxSec	Susceptance B L1, L2, L3 secondary (mS)
YLxSecMag	Admittance Y L1, L2, L3 secondary (mS)
YLxAngle	Admittance Y L1, L2, L3 angle (degrees)

Table. 5.4.24 - 201. Other conductances, susceptances and admittances

Name	Description
G0Pri	Conductance G0 primary (mS)
B0Pri	Susceptance B0 primary (mS)
G0Sec	Conductance G0 secondary (mS)
B0Sec	Susceptance B0 secondary (mS)
Y0Pri	Admittance Y0 primary (mS)
Y0Sec	Admittance Y0 secondary (mS)
Y0Angle	Admittance Y0 angle

Table. 5.4.24 - 202. Other measurements

Name	Description
System f.	System frequency
Ref f1	Reference frequency 1
Ref f2	Reference frequency 2
M Thermal T	Motor thermal temperature
F Thermal T	Feeder thermal temperature
T Thermal T	Transformer thermal temperature
RTD meas 1…16	RTD measurement channels 1…16
Ext RTD meas 1…8	External RTD measurement channels 1…8 (ADAM)
mA input 7,8,15,16	mA input channels 7, 8, 15, 16
ASC 1…4	Analog scaled curves 1…4

Magnitude multiplier

Programmable stages can be set to follow one, two or three analog measurements with the *PSx >/< Measurement setting* parameter. The user must choose a measurement signal value to be compared to the set value, and possibly also set a scaling for the signal. The image below is an example of scaling: a primary zero sequence voltage has been scaled to a percentage value for easier handling when setting up the comparator.

The scaling factor was calculated by taking the inverse value of a 20 kV system:

$$k = \frac{1}{20\,000\ \mathrm{V}/\sqrt{3}} = 0.008\,66$$

When this multiplier is in use, the full earth fault zero sequence voltage is 11 547 V primary which is then multiplied with the above-calculated scaling factor, inversing the final result to 100%. This way a pre-processed signal is easier to set, although it is also possible to just use the scaling factor of 1.0 and set the desired pick-up limit as the primary voltage. Similarly, any chosen measurement value can be scaled to the desired form.

Read-only parameters

The function's *Info* page displays useful, real-time information on the state of the protection function. It is accessed either through the device's HMI display, or through the setting tool software when it is connected to the device and its Live Edit mode is active.

Table. 5.4.24 - 203. Information displayed by the function.

Name	Range	Description
Condition	• Normal • Start • Trip • Blocked	Displays status of the function.
Expected operating time	-1800.000...1800.000s	Displays the expected operating time when a fault occurs.
Time remaining to trip	0.000...1800.000s	When the function has detected a fault and counts down time towards a trip, this displays how much time is left before tripping occurs.
PSx Scaled magnitude X	-5 000 000...5 000 000	Displays measurement value after multiplying it the value set to *PSx Magnitude multiplier*.
PSx >/< MeasMag1/ MagSet1 at the moment	-5 000 000...5 000 000	The ratio between measured magnitude and the pick-up setting.
PSx >/< MeasMag2/ MagSet2 at the moment	-5 000 000...5 000 000	The ratio between measured magnitude and the pick-up setting.
PSx >/< MeasMag3/ MagSet3 at the moment	-5 000 000...5 000 000	The ratio between measured magnitude and the pick-up setting.

© Arcteq Relays Ltd
IM00014

Name	Range	Description
PSx >/< CalcMeasMag/ MagSet at the moment	-5 000 000...5 000 000	The ratio between calculated magnitude and the pick-up setting.

Pick-up settings

The *Pick-up setting Mag* setting parameter controls the pick-up of the PSx>/< function. This defines the maximum or minimum allowed measured magnitude before action from the function. The function constantly calculates the ratio between the set and the measured magnitudes. The user can set the reset hysteresis in the function (by default 3 %). It is always relative to the *Pick-up setting Mag* value.

Table. 5.4.24 - 204. Pick-up settings.

Name	Range	Step	Default	Description
PS# Pick-up term Mag#	• Over > • Over (abs) > • Under < • Under (abs) < • Delta set (%) +/- > • Delta abs (%) > • Delta +/- measval • Delta abs measval	-	Over	Comparator mode for the magnitude. See "Comparator modes" section below for more information.
PS# Pick-up setting Mag#/calc >/<	-5 000 000.0000…5 000 000.0000	0.0001	0.01	Pick-up magnitude
PS# Setting hysteresis Mag#	0.0000…50.0000%	0.0001%	3%	Setting hysteresis
Definite operating time delay	0.000…1800.000s	0.005s	0.04s	Delay setting
Release time delays	0.000…1800.000s	0.005s	0.06s	Pick-up release delay

Comparator modes

When setting the comparators, the user must first choose a comparator mode.

Table. 5.4.24 - 205. Comparator modes

Mode	Description
Over >	**Greater than**. If the measured signal is greater than the set pick-up level, the comparison condition is fulfilled.
Over (abs) >	**Greater than (absolute)**. If the absolute value of the measured signal is greater than the set pick-up level, the comparison condition is fulfilled.

Mode	Description
Under <	Less than. If the measured signal is less than the set pick-up level, the comparison condition is fulfilled. The user can also set a blocking limit: the comparison is not active when the measured value is less than the set blocking limit.
Under (abs) <	Less than (absolute). If the absolute value of the measured signal is less than the set pick-up level, the comparison condition is fulfilled. The user can also set a blocking limit: the comparison is not active when the measured value is less than the set blocking limit.
Delta set (%) +/- >	Relative change over time. If the measured signal changes more than the set relative pick-up value in 20 ms, the comparison condition is fulfilled. The condition is dependent on direction.
Delta abs (%) >	Relative change over time (absolute). If the measured signal changes more than the set relative pick-up value in 20 ms in either direction, the comparison condition is fulfilled. The condition is not dependent on direction.
Delta +/- measval	Change over time. If the measured signal changes more than the set pick-up value in 20 ms, the comparison condition is fulfilled. The condition is dependent on direction.
Delta abs measval	Change over time (absolute). If the measured signal changes more than the set pick-up value in 20 ms in either direction, the comparison condition is fulfilled. The condition is not dependent on direction.

The pick-up level is set individually for each comparison. When setting up the pick-up level, the user needs to take into account the modes in use as well as the desired action. The pick-up limit can be set either as positive or as negative. Each pick-up level has a separate hysteresis setting which is 3 % by default.

The user can set the operating and releasing time delays for each stage.

Function blocking

The blocking signal is evaluated at the start of each program cycle. The blocking signals are connected to the function's dedicated input, which can be configured in the *IO → Blocking Input Control* tab of the function.

- When the pick-up element activates and the blocking signal is not active, a START signal is generated, and the function starts or continues with the trip time countdown.
- When the pick-up element activates and the blocking signal is active, a BLOCKED signal is generated, and the function does not process the event further.
- When a START signal is already active and the blocking input signal becomes active, the START signal is reset and BLOCKED signal is generated. The release time characteristics are then processed in the same way as when the pick-up signal is reset.

The blocking signal needs to reach the device minimum of 5 ms before the set operating delay has passed in order for the blocking to activate in time.

Events and registers

The programmable stage function (abbreviated "PSx" in event block names) generates events and registers from the status changes in the events listed below. The user can select which event messages are stored in the main event buffer: ON, OFF, or both. The events triggered by the function are recorded with a time stamp.

The function's outputs can be used for direct I/O controlling and user logic programming. The function also provides a resettable cumulative counter for the START, TRIP and BLOCKED events.

© Arcteq Relays Ltd

Table. 5.4.24 - 206. Event messages.

Event block name	Event names
PSx	PS1...10 >/< Start ON/OFF
PSx	PS1...10 >/< Trip ON/OFF
PSx	PS1...10 >/< Block ON/OFF

The function registers its operation into the last twelve (12) time-stamped registers. The register of the function records the ON event process data for START, TRIP or BLOCKED. The table below presents the structure of the function's register content.

Table. 5.4.24 - 207. Register content.

Register	Description
Date and time	dd.mm.yyyy hh:mm:ss.mss
Event	Event name
>/< Mag#	The numerical value of the magnitude
Mag#/Set#	Ratio between the measured magnitude and the pick-up setting
Trip time remaining	0 ms...1800s
Setting group in use	Setting group 1...8 active

5.5 Control functions

5.5.1 Setting group selection

All device types support up to eight (8) separate setting groups. The Setting group selection function block controls the availability and selection of the setting groups. By default, only Setting group 1 (SG1) is active and therefore the selection logic is idle. When more than one setting group is enabled, the setting group selector logic takes control of the setting group activations based on the logic and conditions the user has programmed.

Figure. 5.5.1 - 171. Simplified function block diagram of the setting group selection function.

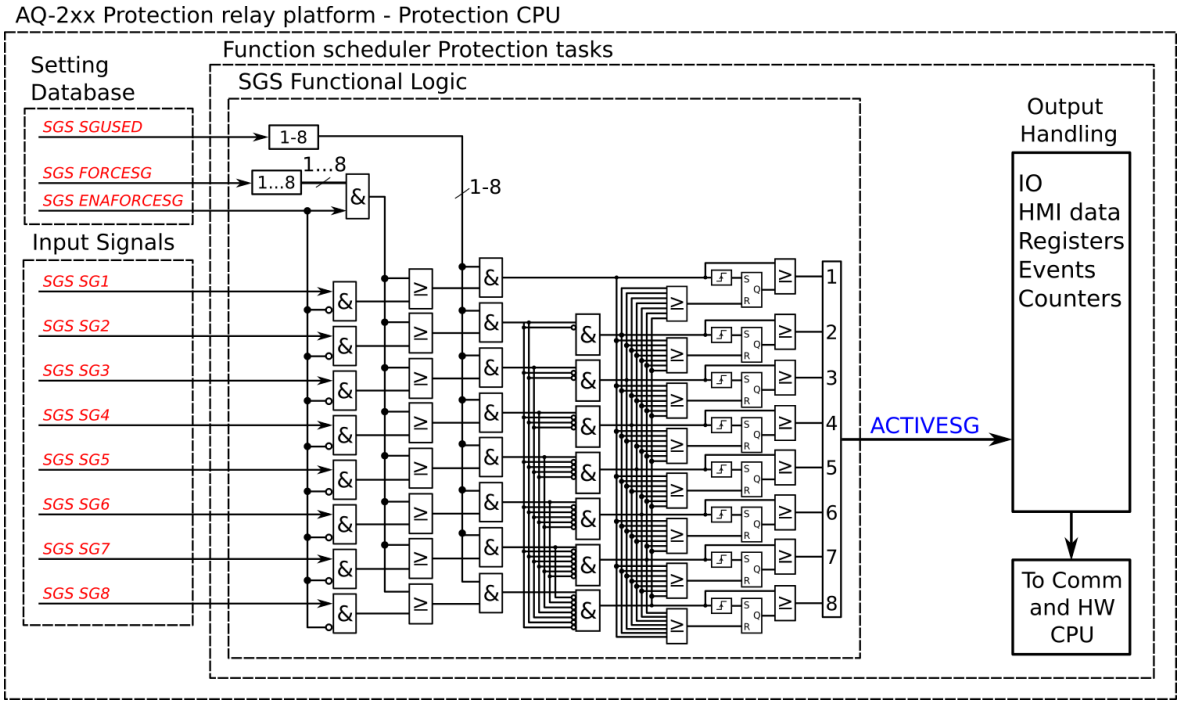

Setting group selection can be applied to each of the setting groups individually by activating one of the various internal logic inputs and connected digital inputs. The user can also force any of the setting groups on when the "Force SG change" setting is enabled by giving the wanted quantity of setting groups as a number in the communication bus or in the local HMI, or by selecting the wanted setting group from *Control → Setting groups*. When the forcing parameter is enabled, the automatic control of the local device is overridden and the full control of the setting groups is given to the user until the "Force SG change" is disabled again.

Setting groups can be controlled either by pulses or by signal levels. The setting group controller block gives setting groups priority values for situations when more than one setting group is controlled at the same time: the request from a higher-priority setting group is taken into use.

Setting groups follow a hierarchy in which setting group 1 has the highest priority, setting group 2 has second highest priority etc. If a static activation signal is given for two setting groups, the setting group with higher priority will be active. If setting groups are controlled by pulses, the setting group activated by pulse will stay active until another setting groups receives and activation signal.

Figure. 5.5.1 - 172. Example sequences of group changing (control with pulse only, or with both pulses and static signals).

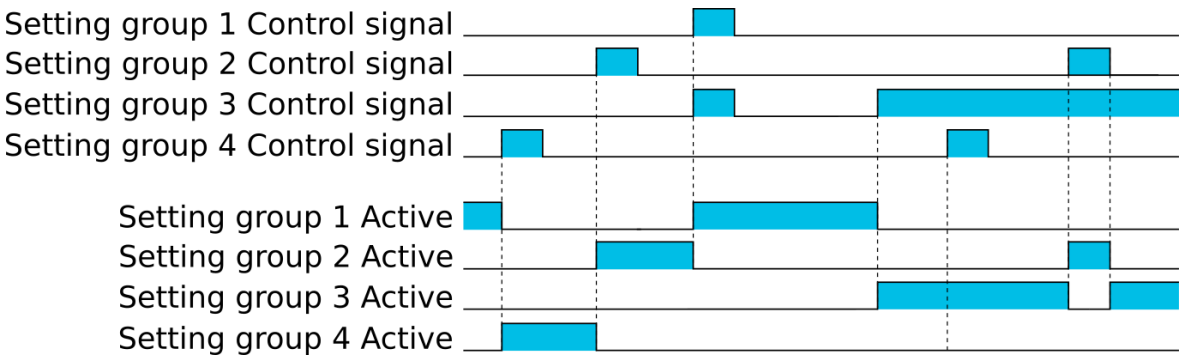

© Arcteq Relays Ltd
IM00014

Settings and signals

The settings of the setting group control function include the active setting group selection, the forced setting group selection, the enabling (or disabling) of the forced change, the selection of the number of active setting groups in the application, as well as the selection of the setting group changed remotely. If the setting group is forced to change, the corresponding setting group must be enabled and the force change must be enabled. Then, the setting group can be set from communications or from HMI to any available group. If the setting group control is applied with static signals right after the "Force SG" parameter is released, the application takes control of the setting group selection.

Table. 5.5.1 - 208. Settings of the setting group selection function.

Name	Range	Default	Description
Active setting group	• SG1 • SG2 • SG3 • SG4 • SG5 • SG6 • SG7 • SG8	SG1	Displays which setting group is active.
Force setting group	• None • SG1 • SG2 • SG3 • SG4 • SG5 • SG6 • SG7 • SG8	None	The selection of the overriding setting group. After "Force SG change" is enabled, any of the configured setting groups in the device can be overriden. This control is always based on the pulse operating mode. It also requires that the selected setting group is specifically controlled to ON after "Force SG" is disabled. If there are no other controls, the last set setting group remains active.
Force setting group change	• Disabled • Enabled	Disabled	The selection of whether the setting group forcing is enabled or disabled. This setting has to be active before the setting group can be changed remotely or from a local HMI. This parameter overrides the local control of the setting groups and it remains on until the user disables it.
Used setting groups	• SG1 • SG1...2 • SG1...3 • SG1...4 • SG1...5 • SG1...6 • SG1...7 • SG1...8	SG1	The selection of the activated setting groups in the application. Newly-enabled setting groups use default parameter values.
Remote setting group change	• None • SG1 • SG2 • SG3 • SG4 • SG5 • SG6 • SG7 • SG8	None	This parameter can be controlled through SCADA to change the setting group remotely. Please note that if a higher priority setting group is being controlled by a signal, a lower priority setting group cannot be activated with this parameter.

Table. 5.5.1 - 209. Signals of the setting group selection function.

Name	Description
Setting group 1	The selection of Setting group 1 ("SG1"). Has the highest priority input in setting group control. Can be controlled with pulses or static signals. If static signal control is applied, no other SG requests will be processed.
Setting group 2	The selection of Setting group 2 ("SG2"). Has the second highest priority input in setting group control. Can be controlled with pulses or static signals. If static signal control is applied, no requests with a lower priority than SG1 will be processed.
Setting group 3	The selection of Setting group 3 ("SG3"). Has the third highest priority input in setting group control. Can be controlled with pulses or static signals. If static signal control is applied, no requests with a lower priority than SG1 and SG2 will be processed.
Setting group 4	The selection of Setting group 4 ("SG4"). Has the fourth highest priority input in setting group control. Can be controlled with pulses or static signals. If static signal control is applied, no requests with a lower priority than SG1, SG2 and SG3 will be processed.
Setting group 5	The selection of Setting group 5 ("SG5"). Has the fourth lowest priority input in setting group control. Can be controlled with pulses or static signals. If static signal control is applied, SG6, SG7 and SG8 requests will not be processed.
Setting group 6	The selection of Setting group 6 ("SG6"). Has the third lowest priority input in setting group control. Can be controlled with pulses or static signals. If static signal control is applied, SG7 and SG8 requests will not be processed.
Setting group 7	The selection of Setting group 7 ("SG7"). Has the second lowest priority input in setting group control. Can be controlled with pulses or static signals. If static signal control is applied, only SG8 requests will not be processed.
Setting group 8	The selection of Setting group 8 ("SG8"). Has the lowest priority input in setting group control. Can be controlled with pulses or static signals. If static signal control is applied, all other SG requests will be processed regardless of the signal status of this setting group.

Example applications for setting group control

This chapter presents some of the most common applications for setting group changing requirements.

A Petersen coil compensated network usually uses directional sensitive earth fault protection. The user needs to control its characteristics between varmetric and wattmetric; the selection is based on whether the Petersen coil is connected when the network is compensated, or whether it is open when the network is unearthed.

© Arcteq Relays Ltd
IM00014

Figure. 5.5.1 - 173. Setting group control – one-wire connection from Petersen coil status.

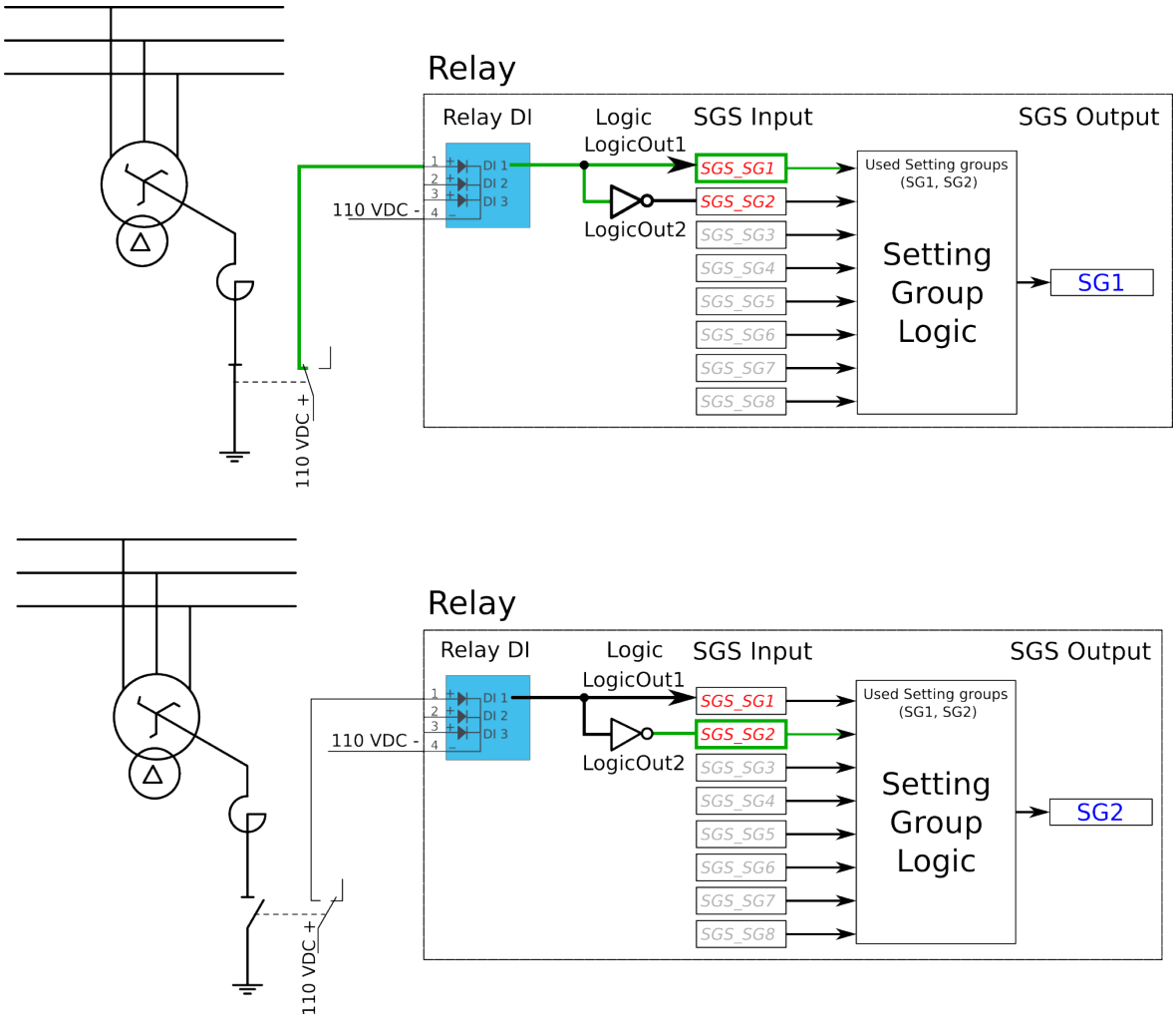

Depending on the application's requirements, the setting group control can be applied either with a one-wire connection or with a two-wire connection by monitoring the state of the Petersen coil connection.

When the connection is done with one wire, the setting group change logic can be applied as shown in the figure above. The status of the Petersen coil controls whether Setting group 1 is active. If the coil is disconnected, Setting group 2 is active. This way, if the wire is broken for some reason, the setting group is always controlled to SG2.

Figure. 5.5.1 - 174. Setting group control – two-wire connection from Petersen coil status.

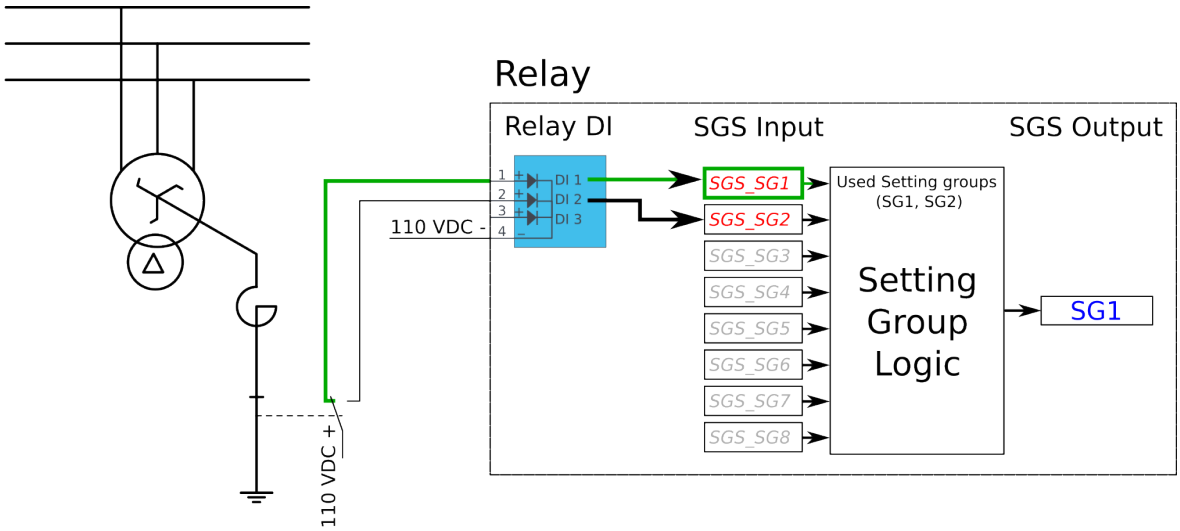

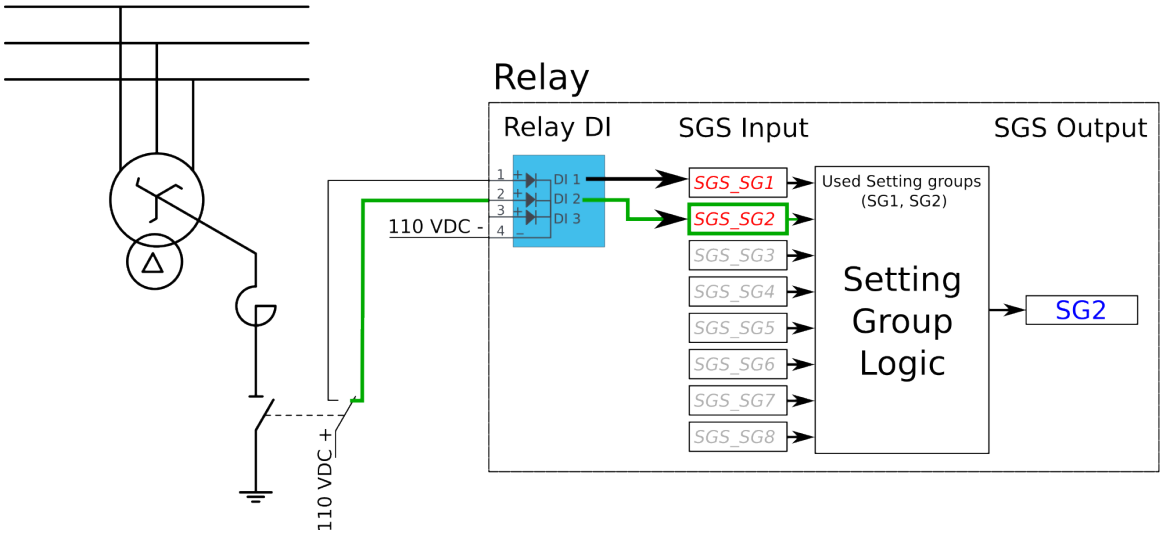

© Arcteq Relays Ltd
IM00014

Figure. 5.5.1 - 175. Setting group control – two-wire connection from Petersen coil status with additional logic.

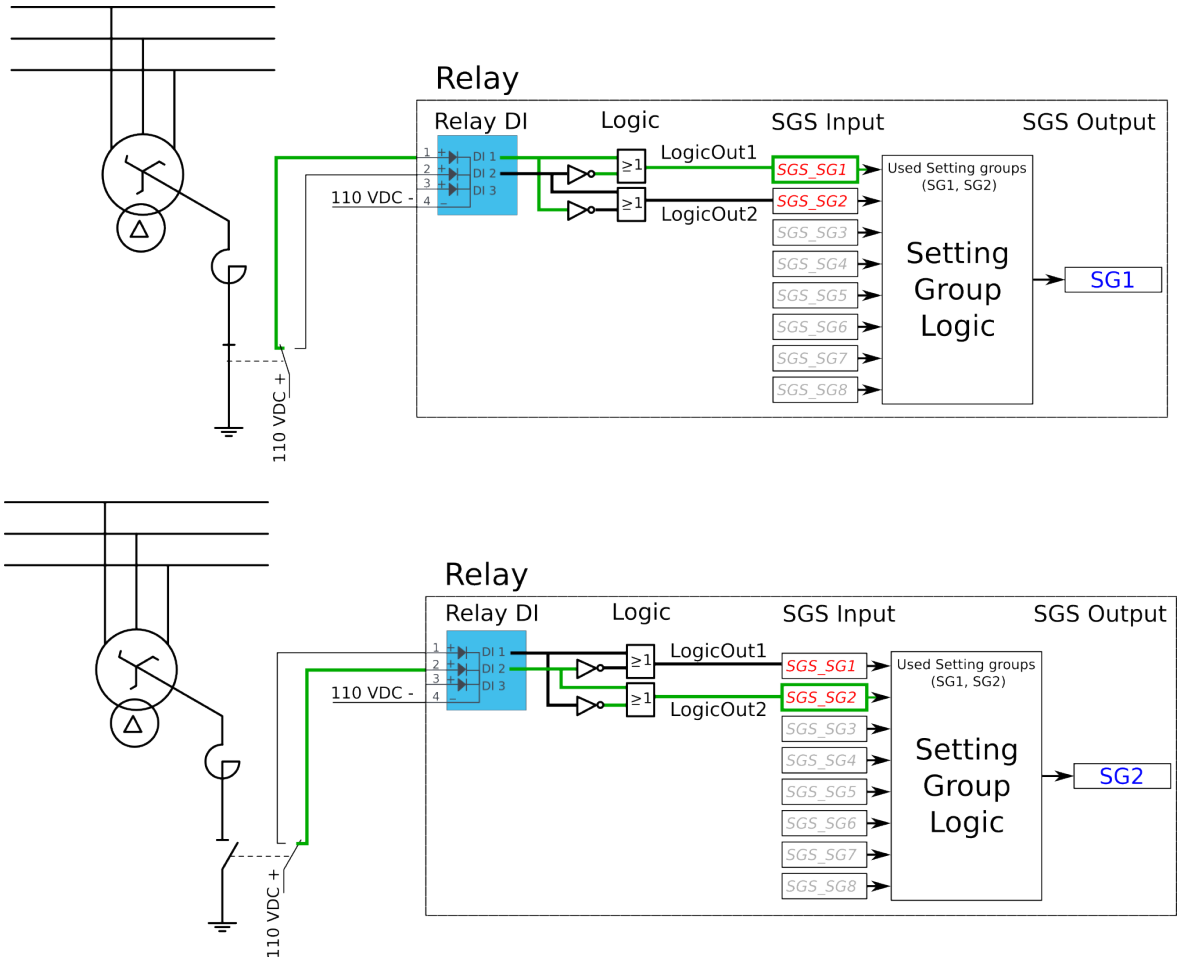

The images above depict a two-wire connection from the Petersen coil: the two images at the top show a direct connection, while the two images on the bottom include additional logic. With a two-wire connection the state of the Petersen coil can be monitored more securely. The additional logic ensures that a single wire loss will not affect the correct setting group selection.

The application-controlled setting group change can also be applied entirely from the device's internal logics. For example, the setting group change can be based on the cold load pick-up function (see the image below).

Figure. 5.5.1 - 176. Entirely application-controlled setting group change with the cold load pick-up function.

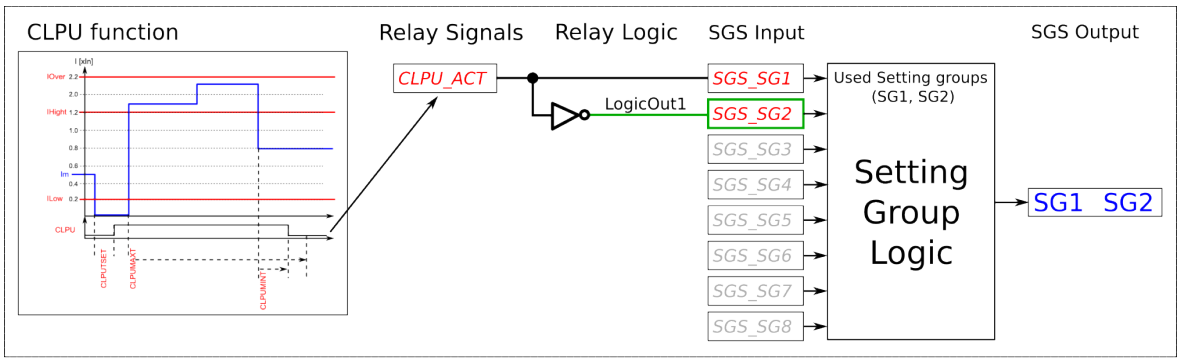

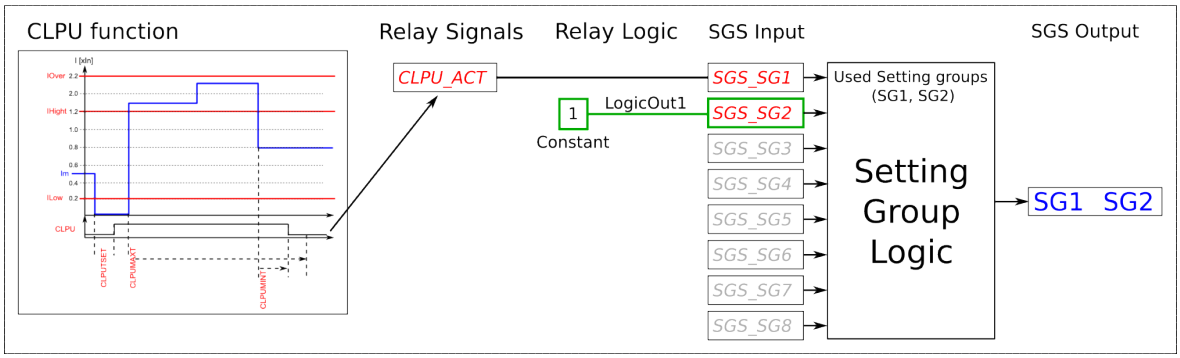

In these examples the cold load pick-up function's output is used for the automatic setting group change. Similarly to this application, any combination of the signals available in the device's database can be programmed to be used in the setting group selection logic.

As all these examples show, setting group selection with application control has to be built fully before they can be used for setting group control. The setting group does not change back to SG1 unless it is controlled back to SG1 by this application; this explains the inverted signal NOT as well as the use of logics in setting group control. One could also have SG2 be the primary SG, while the ON signal would be controlled by the higher priority SG1; this way the setting group would automatically return to SG2 after the automatic control is over.

Events

The setting group selection function block (abbreviated "SGS" in event block names) generates events from the status changes in the events listed below. The user can select which event messages are stored in the main event buffer: ON, OFF, or both. The events triggered by the function are recorded with a time stamp.

Table. 5.5.1 - 210. Event messages.

Event block name	Event names
SGS	SG2...8 Enabled/Disabled
SGS	SG1...8 Request ON/OFF
SGS	Remote Change SG Request ON/OFF
SGS	Local Change SG Request ON/OFF
SGS	Force Change SG ON/OFF

© Arcteq Relays Ltd
IM00014

Event block name	Event names
SGS	SG Request Fail Not configured SG ON/OFF
SGS	Force Request Fail Force ON/OFF
SGS	SG Req. Fail Lower priority Request ON/OFF
SGS	SG1...8 Active ON/OFF

5.5.2 Object control and monitoring

The object control and monitoring function takes care of both for circuit breakers and disconnectors. The monitoring and controlling are based on the statuses of the device's configured digital inputs and outputs. The number of controllable and monitored objects in each device depends on the device type and amount of digital inputs. One controllable object requires a minimum of two (2) output contacts. The status monitoring of one monitored object usually requires two (2) digital inputs. Alternatively, object status monitoring can be performed with a single digital input: the input's active state and its zero state (switched to 1 with a NOT gate in the Logic editor).

An object can be controlled manually or automatically. Manual control can be done by local control, or by remote control. Local manual control can be done by devices front panel (HMI) or by external push buttons connected to devices digital inputs. Manual remote control can be done through one of the various communication protocols available (Modbus, IEC101/103/104 etc.). The function supports the modes "Direct control" and "Select before execute" while controlled remotely. Automatic controlling can be done with functions like auto-reclosing function (ANSI 79).

The main outputs of the function are the OBJECT OPEN and OBJECT CLOSE control signals. Additionally, the function reports the monitored object's status and applied operations. The setting parameters are static inputs for the function, which can only be changed by the user in the function's setup phase.

Figure. 5.5.2 - 177. Simplified function block diagram of the object control and monitoring function.

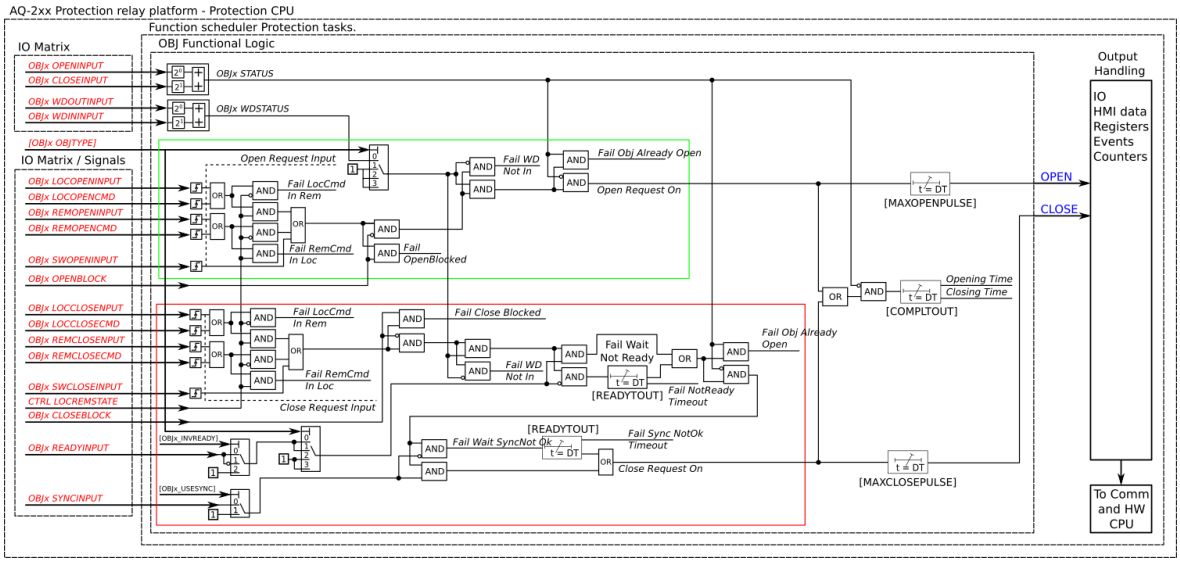

Settings

The following parameters help the user to define the object. The operation of the function varies based on these settings and the selected object type. The selected object type determines how much control is needed and which setting parameters are required to meet those needs.

Table. 5.5.2 - 211. Object settings and status parameters.

Name	Range	Default	Description
Local/Remote status	• Local • Remote	Remote	Displays the status of the device's "local/remote" switch. Local controls cannot override the open and close commands while device is in "Remote" status. The remote controls cannot override the open and close commands while device is in "Local" status.
Object status force to	• Normal • Openreq On • Closereq On • Opensignal On • Closesignal On • WaitNoRdy On • WaitNoSnc On • NotrdyFail On • NosyncFail On • Opentout On • Clotout On • OpenreqUSR On • CloreqUSR On	Normal	Force the status of the function. Visible only when *Enable stage forcing* parameter is enabled in *General* menu.
Object name	-	Objectx	The user-set name of the object, at maximum 32 characters long.
Object type	• Withdrawable circuit breaker • Circuit breaker • Disconnector (MC) • Disconnector (GND)	Circuit breaker	The selection of the object type. This selection defines the number of required digital inputs for the monitored object. This affects the symbol displayed in the HMI and the monitoring of the circuit breaker. It also affects whether the withdrawable cart is in/out status is monitored. See the next table ("Object types") for a more detailed look at which functionalities each of the object types have.
Objectx Breaker status	• Intermediate • Open • Closed • Bad	-	Displays the status of breaker. Intermediate is displayed when neither of the status signals (open or close) are active. Bad status is displayed when both status signals (open and close) are active.
Objectx Withdraw status	• WDIntermediate • WDCartOut • WDCart In • WDBad • Not in use	-	Displays the status of circuit breaker cart. WDIntermediate is displayed when neither of the status signals (in or out) are active. WDBad status is displayed when both status signals (in and out) are active. If the selected object type is not set to "Withdrawable circuit breaker", this setting displays the "No in use" option.
Additional status information	• Open Blocked • Open Allowed • Close Blocked • Close Allowed • Object Ready • Object Not Ready • Sync Ok • Sync Not Ok	-	Displays additional information about the status of the object.

© Arcteq Relays Ltd
IM00014

Name	Range	Default	Description
Use Synchrocheck	• Not in use • Synchrocheck in use	Not in use	Selects whether the "Synchrocheck" condition is in use for the circuit breaker close command. If "In use" is selected the input chosen to "Sync.check status in" has to be active to be able to close circuit breaker. Synchrocheck status can be either an internal signal generated by synchrocheck function or digital input activation with an external synchrocheck device.
Use Object ready	• Ready High • Ready Low • Not in use	Not in use	Selects whether the "Object ready" condition is in use for the circuit breaker close command. If in use the signal connected to "Object ready status In" has to be high or low to be able to close the breaker (depending on "Ready High or Low" selection).
Open requests	$0…2^{32}–1$	-	Displays the number of successful "Open" requests.
Close requests	$0…2^{32}–1$	-	Displays the number of successful "Close" requests.
Open requests failed	$0…2^{32}–1$	-	Displays the number of failed "Open" requests.
Close requests failed	$0…2^{32}–1$	-	Displays the number of failed "Close" requests.
Clear statistics	• - • Clear	-	Clears the request statistics, setting them back to zero (0). Automatically returns to "-" after the clearing is finished.

Table. 5.5.2 - 212. Object types.

Name	Functionalities	Description
Withdrawable circuit breaker	Breaker cart position Circuit breaker position Circuit breaker control Object ready check before closing breaker Synchrochecking before closing breaker Interlocks	The monitor and control configuration of the withdrawable circuit breaker.
Circuit breaker	Position indication Control Object ready check before closing breaker Synchrochecking before closing breaker Interlocks	The monitor and control configuration of the circuit breaker.
Disconnector (MC)	Position indication Control	The position monitoring and control of the disconnector.
Disconnector (GND)	Position indication	The position indication of the earth switch.

Table. 5.5.2 - 213. I/O.

Signal	Range	Description
Objectx Open Status In	Digital input or other logical signal selected by the user (SWx)	A link to a physical digital input. The monitored object's OPEN status. "1" refers to the active open state of the monitored object.
Objectx Close Status In		A link to a physical digital input. The monitored object's CLOSE status. "1" refers to the active close state of the monitored object.
Withdrw.CartIn.Status In		A link to a physical digital input. The monitored withdrawable object's position is IN. "1" means that the withdrawable object cart is in.
Withdrw.CartOut.Status In		A link to a physical digital input. The monitored withdrawable object's position is OUT. "1" means that the withdrawable object cart is pulled out.
Objectx Ready status In		A link to a physical digital input. Indicates that status of the monitored object. "1" means that the object is ready and the spring is charged for a close command.
Sync.Check status In		A link to a physical digital input or a synchrocheck function. "1" means that the synchrocheck conditions are met and the object can be closed.
Objectx Open Command	OUT1…OUTx	The physical "Open" command pulse to the device's output relay.
Objectx Close Command		The physical "Close" command pulse to the device's output relay.

Table. 5.5.2 - 214. Operation settings.

Name	Range	Step	Default	Description
Breaker traverse time	0.02…500.00 s	0.02 s	0.2 s	Determines the maximum time between open and close statuses when the breaker switches. If this set time is exceeded and both open and closed status inputs are active, the status "Bad" is activated in the "Objectx Breaker status" setting. If neither of the status inputs are active after this delay, the status "Intermediate" is activated.
Sync wait timeout	0.02…500.00 s	0.02 s	0.2 s	If synchrocheck is used, the object will wait for a "synchrocheck ok" signal before giving the closing command. This parameter will cancel the command if synchronization is not achieved on time.
Maximum Close command pulse length	0.02…500.00 s	0.02 s	0.2 s	Determines the maximum length for a Close pulse from the output relay to the controlled object. If the object operates faster than this set time, the control pulse is reset and a status change is detected.
Maximum Open command pulse length	0.02…500.00 s	0.02 s	0.2 s	Determines the maximum length for a Open pulse from the output relay to the controlled object. If the object operates faster than this set time, the control pulse is reset and a status change is detected.

© Arcteq Relays Ltd
IM00014

Name	Range	Step	Default	Description
Control termination timeout	0.02…500.00 s	0.02 s	10 s	Determines the control pulse termination timeout. If the object has not changed it status in this given time the function will issue error event and the control is ended. This parameter is common for both open and close commands.
Final trip pulse length	0.00…500.00 s	0.02 s	0.2 s	Determines the length of the final trip pulse length. When the object has executed the final trip, this signal activates. If set to 0 s, the signal is continuous. If auto-recloser function controls the object, "final trip" signal is activated only when there are no automatic reclosings expected after opening the breaker.

Table. 5.5.2 - 215. Control settings (DI and Application).

Signal	Range	Description
Access level for MIMIC control	• User • Operator • Configurator • Super user	Defines what level of access is required for MIMIC control. The default is the "Configurator" level.
Objectx LOCAL Close control input	Digital input or other logical signal selected by the user	The local Close command from a physical digital input (e.g. a push button).
Objectx LOCAL Open control input		The local Open command from a physical digital input (e.g. a push button).
Objectx REMOTE Close control input		The remote Close command from a physical digital input (e.g. RTU).
Objectx REMOTE Open control input		The remote Open command from a physical digital input (e.g. RTU).
Objectx Application Close		The Close command from the application. Can be any logical signal.
Objectx Application Open		The Close command from the application. Can be any logical signal.

Blocking and interlocking

The interlocking and blocking conditions can be set for each controllable object, with Open and Close set separately. Blocking and interlocking can be based on any of the following: other object statuses, a software function or a digital input.

In order for the blocking signal to be received on time, it has to reach the function 5 ms before the control command.

Events and registers

The object control and monitoring function (abbreviated "OBJ" in event block names) generates events and registers from the status changes in the events listed below. The user can select which event messages are stored in the main event buffer: ON, OFF, or both. The events triggered by the function are recorded with a time stamp.

The function also provides a resettable cumulative counter for OPEN, CLOSE, OPEN FAILED, and CLOSE FAILED events.

Table. 5.5.2 - 216. Event messages of the OBJ function.

Event block name	Description
OBJX	Object Intermediate
OBJX	Object Open
OBJX	Object Close
OBJX	Object Bad
OBJX	WD Intermediate
OBJX	WD Out
OBJX	WD in
OBJX	WD Bad
OBJX	Open Request ON/OFF
OBJX	Open Command ON/OFF
OBJX	Close Request ON/OFF
OBJX	Close Command ON/OFF
OBJX	Open Blocked ON/OFF
OBJX	Close Blocked ON/OFF
OBJX	Object Ready
OBJX	Object Not Ready
OBJX	Sync Ok
OBJX	Sync Not Ok
OBJX	Open Command Fail
OBJX	Close Command Fail
OBJX	Final trip ON/OFF

The function registers its operation into the last twelve (12) time-stamped registers. The table below presents the structure of the function's register content.

Table. 5.5.2 - 217. Register content.

Name	Description
Date and time	dd.mm.yyyy hh:mm:ss.mss
Event	Event name
Recorded Object opening time	Time difference between the object receiving an "Open" command and the object receiving the "Open" status.

© Arcteq Relays Ltd
IM00014

Name	Description
Recorded Object closing time	Time difference between the object receiving a "Close" command and object receiving the "Closed" status.
Object status	The status of the object.
WD status	The status of the withdrawable circuit breaker.
Open fail	The cause of an "Open" command's failure.
Close fail	The cause of a "Close" command's failure.
Open command	The source of an "Open" command.
Close command	The source of an "Open" command.
General status	The general status of the function.

5.5.3 Indicator object monitoring

The indicator object monitoring function takes care of the status monitoring of disconnectors. The function's sole purpose is indication and does not therefore have any control functionality. To control circuit breakers and/or disconnectors, please use the Object control and monitoring function. The monitoring is based on the statuses of the configured device's digital inputs. The number of monitored indicators in a device depends on the device type and available inputs. The status monitoring of one monitored object usually requires two (2) digital inputs. Alternatively, object status monitoring can be performed with a single digital input: the input's active state and its zero state (switched to 1 with a NOT gate in the Logic editor).

The outputs of the function are the monitored indicator statuses (Open, Close, Intermediate and Bad). The setting parameters are static inputs for the function, which can only be changed by the use in the function's setup phase.

The inputs of the function are the binary status indications. The function generates general time stamped ON/OFF events to the common event buffer from each of the following signals: OPEN, CLOSE, BAD and INTERMEDIATE event signals. The time stamp resolution is 1 ms.

Settings

Function uses available hardware and software digital signal statuses. These input signals are also setting parameters for the function.

Table. 5.5.3 - 218. Indicator status.

Name	Range	Default	Description
Indicator name ("Ind. Name")	-	IndX	The user-set name of the object, at maximum 32 characters long.
IndicatorX Object status ("Ind.X Object Status")	• Intermediate • Open • Closed • Bad	-	Displays the status of the indicator object. Intermediate status is displayed when neither of the status conditions (open or close) are active. Bad status is displayed when both of the status conditions (open and close) are active.

Table. 5.5.3 - 219. Indicator I/O.

Signal	Range	Description
IndicatorX Open input ("Ind.X Open Status In")	Digital input or other logical signal selected by the user (SWx)	A link to a physical digital input. The monitored indicator's OPEN status. "1" refers to the active "Open" state of the monitored indicator.
IndicatorX Close input ("Ind.X Close Status In")	Digital input or other logical signal selected by the user (SWx)	A link to a physical digital input. The monitored indicator's CLOSE status. "1" refers to the active "Close" state of the monitored indicator.

Events

The indicator object monitoring function (abbreviated "CIN" in event block names) generates events from the status changes in the events listed below. The user can select which event messages are stored in the main event buffer: ON, OFF, or both. The events triggered by the function are recorded with a time stamp.

Table. 5.5.3 - 220. Event messages (instances 1 – 5).

Event block name	Event names
CIN1...5	Intermediate
CIN1...5	Open
CIN1...5	Close
CIN1...5	Bad

5.5.4 Auto-recloser (79)

Auto-reclosing means a coordinated de-energization and re-energization of overhead lines (both transmission and distribution). Its purpose is to clear transient and semi-permanent fault causes from the line and automatically restore the supply to the line. These types of faults account for approximately 80...95 % of all faults found in transmission and distribution networks. The majority of these fault types can be cleared with high-speed auto-reclosing, while the rest can be cleared with delayed auto-reclosing by de-energizing the faulty line for a longer period of time.

Only a minority of overhead line faults are of the permanent type which require maintenance or repair in the actual fault location. This type of fault include lightning striking the line, a tree branch touching the line, an arc caused by animals, and a short-circuit caused by some other object touching the line. If the fault is permanent (e.g. a broken insulator or a fallen tree leaning on the overhead line), the auto-recloser cannot clear the fault and the faulty feeder is locked and prevented from closing until the cause of the fault is repaired in the actual fault location. Also, when a fault cannot be cleared by auto-reclosing the line, any close-distance short-circuits should avoid initiating the auto-recloser because that would only cause unnecessary stress for the lines and the circuit breakers. Similar situations also rise in mixed networks since cable network faults cannot be cleared with the auto-recloser. The function must therefore be aware of the fault location before applying the auto-recloser to the faulty line.

© Arcteq Relays Ltd
IM00014

Auto-recloser as application

The main principle of the auto-recloser is to de-energize the faulty line and the fault location so the cause of the fault can drop out from the line. When the line is energized and an object either touches the line or drops onto the line, the current starts to flow through the object either to the ground or between the phases. This causes the surrounding air to heat and ionize, and it starts to operate as a conductor between the energized phase(s) and the ground causing an arc to ignite.

When the breaker is opened (either by an auto-recloser command or by a protection function), the voltage in the line goes to zero. This extinguishes the arc and lets the fault-causing object to drop from the line, thus clearing the cause of the fault. Auto-reclosing closes the breaker after a set time (called 'dead time' during which the line is not energized) and the supply is restored to the line. If the fault is not cleared by the first auto-recloser cycle (called 'shot'), more shots can be applied to the line. Alternatively, the function can be set to initiate the final trip, locking the feeder closing. The decision between a single-shot and a multi-shot auto-recloser depends on the following: protection type, switchgear, circuit breaker, stability requirements, network type, consumer loads as well as local utility knowledge and network practices.

The user can select whether there is a set time delay (called 'arcing time') between shots to burn the fault-causing object from the line, or whether normal protection operating times are applied. When a fault is not present when the breaker is closed but reappears soons after (called 'discrimination time' and 'reclaim time'), the auto-recloser function can either arm another shot or give the final trip command and the feeder becomes locked. The user can select the preferred method in the function's settings.

It is difficult to define a typical auto-recloser scheme because the above-mentioned parameters (and thus the main parameters of a scheme) vary greatly in distribution and transmission networks. This is why there are no universally applicable answers from the number of shots and the duration of the dead times to which protection functions should trigger the auto-recloser.

The minimum times for the "Dead time" setting is mostly dependent on the voltage level of the protected network: the air needs enough time to de-ionize before the circuit breaker is opened. For medium-voltage networks (20...75 kV) a 200 ms dead time should be sufficient. High-voltage networks require a longer dead time: a 110 kV network needs 300 ms and a 400 kV network needs 400...500 ms. This minimum time is not, however, less straightforward than this as it is affected by other parameters as well (such as conductor spacing, wind speed, fault type, fault duration, etc.). The main purpose of the "Dead time" setting is to give enough time for the air surrounding the fault location to return to its isolating state before the line is re-energized and therefore prevent the arc from reignite due to the heated and ionized air. The circuit breaker's open-close-open cycle capacity is another restricting factor for the minimum "Dead time" setting in low-voltage networks. In high-voltage networks, the time de-ionizing requires puts additional limitations on the minimum "Dead time" setting.

The user can build different schemes for evolving faults (such as transient earth faults that become multi-phase short-circuits or overcurrent faults) by changing the priorities and behaviors requests have. The auto-recloser function has five (5) independent priority requests for reclosing: REQ1 has the highest priority and REQ5 the lowest. The function also has one (1) critical request which halts the reclosing in any position when the request is received.

Auto-recloser scheme in radial networks

A typical medium-voltage overhead network is usually radial in structure. This does not cause any additional requirements for the auto-recloser scheme apart from the above-mentioned limitations from the required air de-ionization time and the capacity of the circuit breaker. Also, a typical medium-voltage overhead line consists only of consumers and has no power generation; thus, the main objective of the structure is to provide a stable and continuous supply of electricity.

Figure. 5.5.4 - 178. Diagram of a typical radial medium-voltage network in rural areas.

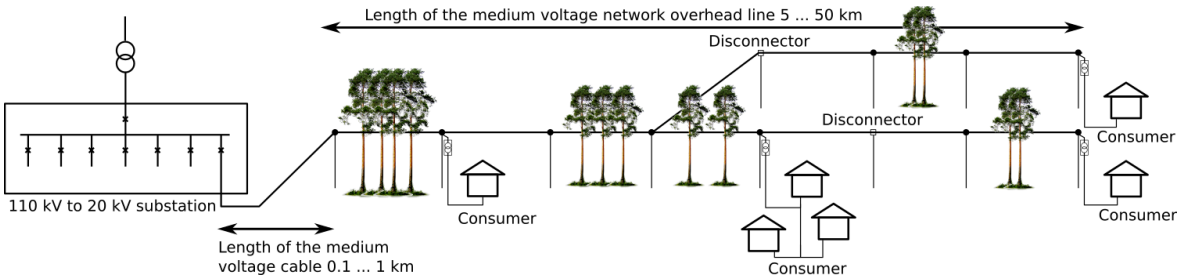

Usually, a radially built medium-voltage network in rural areas consists of a short cable connection from the substation to the overhead line, followed by a relatively long overhead line that normally ends with the consumer. The consumer (residence, farm, etc.) can connect to basically any point in the overhead line with a 20 kV/0.4 kV distribution transformer. The overhead line can have many branches, and it is not uncommon (especially in rural areas) that there are multiple forest areas the line runs through between the consumer connections. In longer lines in sparsely populated areas it is possible to isolate areas of the overhead line by dividing it up with disconnectors (at least in branches).

This type of application normally uses an auto-recloser with two shots (one high-speed and one delayed) which are triggered by earth fault protection or overcurrent protection. Short-circuit protection is used for interlocking the auto-recloser in case a clear short-circuit fault occurs in the line.

Figure. 5.5.4 - 179. Example of assigning request signals.

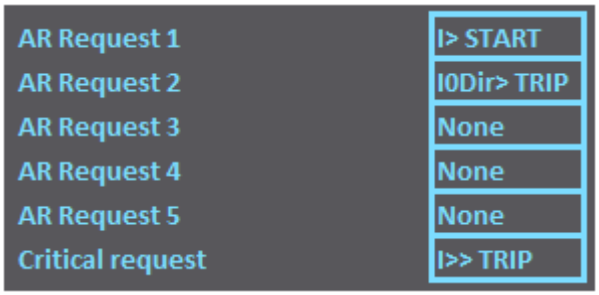

Figure. 5.5.4 - 180. Example of shot settings (two requests and two initialized shots).

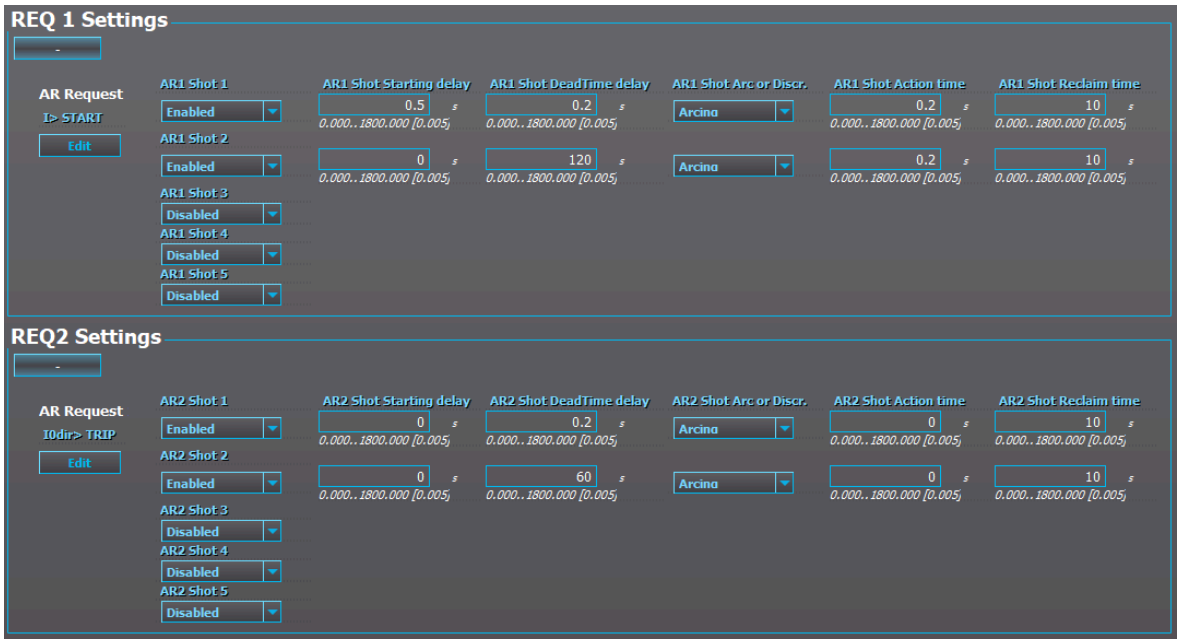

© Arcteq Relays Ltd
IM00014

In this example, earth fault (REQ2) uses its own operating time settings, whereas the time delay for overcurrent (REQ1) comes from the auto-recloser's own settings. Both fault types can initialize both of the shots with different settings. If the fault evolves from earth fault into a multi-phase fault, the auto-recloser uses the AR1 settings for the reclosing. In this example, the dead time between the first and the second shot in REQ1 differs from the dead time in REQ2 because the air needs more time to cool and de-ionize after an overcurrent or a multi-phase fault than it does after an earth fault. If the high-set overcurrent stage activates in any situation, the auto-reclosing sequence is stopped, the final trip is issued and the feeder closing is locked by the auto-recloser. A manual reset of the auto-recloser's lock is required before one can attempt to close the breaker. A manual reset can be applied from SCADA or locally from the device's HMI.

Based on the example above, the following six (6) sections present the principle signaling of the auto-recloser function. These are the auto-recloser sequence variations that can occur with this setup:

- from Trip with two shots (both fail)
- from Trip with two shots (high-speed fails, time-delayed succeeds)
- from Trip with two shots (high-speed succeeds)
- from Start with two shots (both fail)
- from Start with two shots (high-speed fails, time-delayed succeeds)
- from Start with two shots (high-speed succeeds).

The signal status graphs describe the statuses of available requests, the statuses of the auto-recloser's internal signals, the statuses of the timers, the breaker controls from the auto-recloser function as well as the breaker status signals.

The auto-recloser function operates closely with the object control and monitoring function, and all breaker status and monitor signals are forwarded from the selected object to the auto-recloser function. The circuit breaker's "Open" and "Close" signals are also controlled through the dedicated object. When the breaker cannot be closed (because it is not ready or the closing is waiting for a Synchrocheck allowance), the wait state is forwarded to the auto-recloser function to wait for the object's acknowledgement either of a successful closing or of a failure time-out. A similar situation can arise in the circuit breaker's "Open" command, for example, if the command is blocked because of an SF_6 gas leakage. In failure acknowledgement situations the auto-recloser function is always put to a lock-out state with a requirement for resetting once the cause of the lock-out is cleared. Resetting is done by an external input to the function or by closing the breaker.

Auto-recloser sequence from Trip with two shots (both fail).

In this auto-recloser scheme, the TRIP signal from the directional eath fault protection function (I0dir> TRIP) was set up as the operation starter for Request 2 (REQ2). REQ2 has two shots (Shots 1 and 2) enabled with the setting detailed in the image below; the first one is a high-speed shot (0.2 s) that is then followed by a time-delayed shot (60 s).

Figure. 5.5.4 - 181. Settings for I0dir> with two shots.

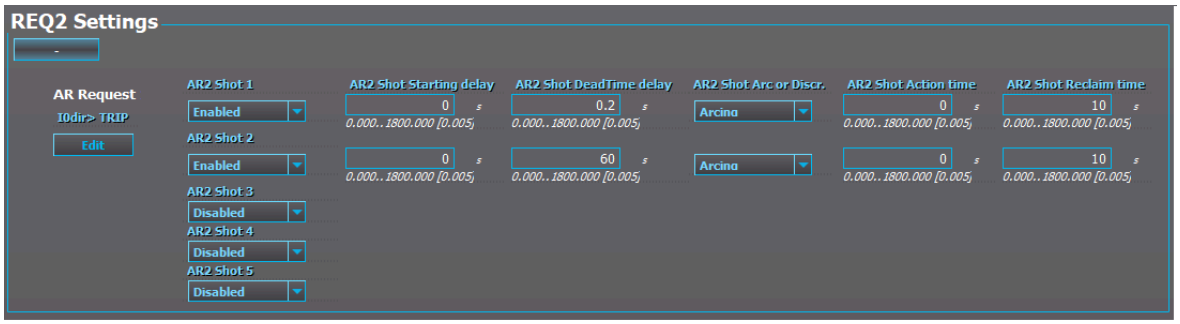

When the TRIP signal is used to initiate the auto-recloser sequence, no additional starting or discrimination times are needed as the protection stage's own operation takes care of the breaker opening timings directly. Therefore, the auto-recloser function only monitors the status of the directional earth fault stage's tripping before initiating requests and shots.

Figure. 5.5.4 - 182. Signal status graph of the permanent earth fault auto-recloser cycle.

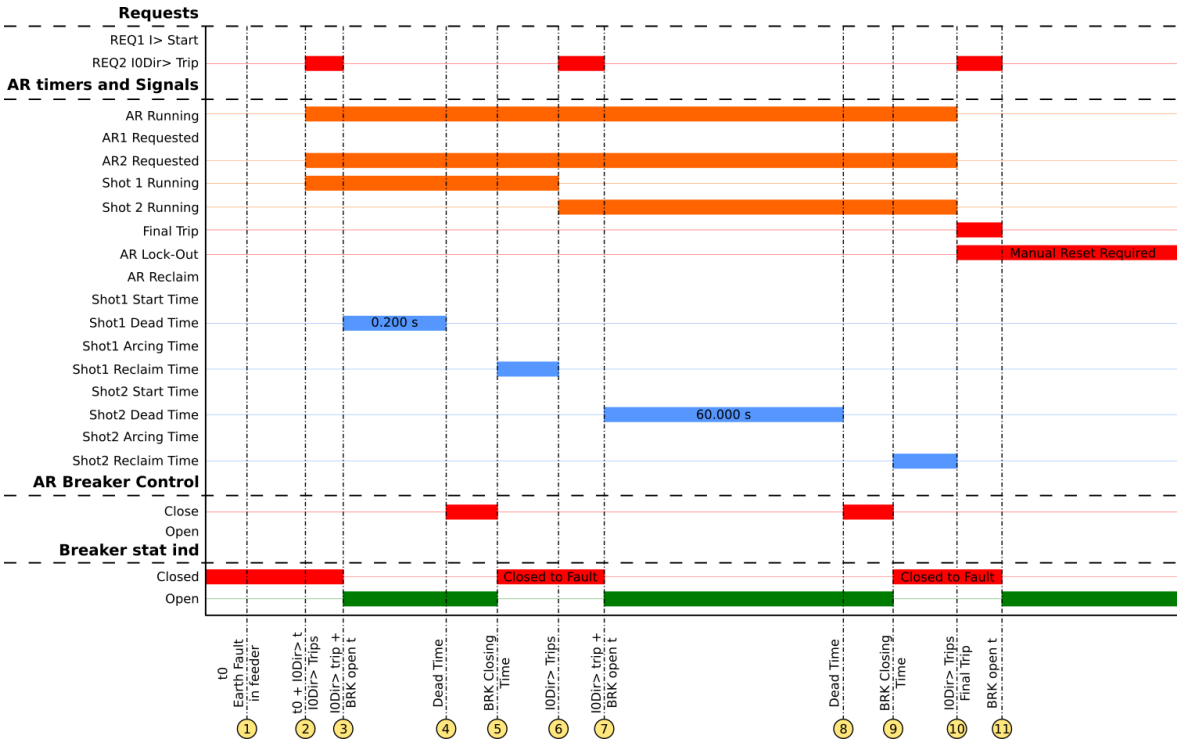

1. An earth fault is found in the protected line causing the I0Dir> protection to start calculating the operating time for a trip.
2. The I0Dir> trips and gives the "Open" command to the breaker's open coil. The auto-recloser function is initiated and the AR Running, AR2 Requested and Shot 1 Running signals are activated.
3. The circuit breaker is opened and the I0Dir> TRIP signal is released and simultaneously the REQ2 trip signal for the auto-recloser is released. The recloser starts calculating the Shot1 Dead Time to close the breaker.
4. The Shot1 Dead Time (200 ms) is exceeded and the function sends a "Close" request to the object breaker (AR Breaker): the conditions are met and the breaker's "Close" command is sent to the breaker's close coil.
5. The circuit breaker is closed towards the fault as it was not cleared by Shot 1 given the non-energized time. The I0dir> stage picks up and starts calculating the operating time for a trip. A "Close" command is dropped after the breaker's "Closed" indication is received and the auto-recloser function starts calculating Shot1 Reclaim Time.
6. The I0Dir> stage trips a second time and gives the REQ2 request to the function. However, as the function is in the process of calculating the Shot1 Reclaim Time when it receives this request, the function moves on to the next available shot (Shot 2) for the request. The Shot2 Running signal is set to active and the Shot1 Running is terminated.
7. The circuit breaker is opened and the I0Dir> TRIP signal is released and simultaneously REQ2 trip signal for auto-recloser is released. The recloser starts calculating the Shot2 Dead Time to close the breaker.
8. The Shot2 Dead Time (60 s) is exceeded and the function sends a "Close" request to the object breaker: the conditions are met and the breaker's "Close" command is sent to the breaker's close coil.

© Arcteq Relays Ltd
IM00014

9. The circuit breaker is closed towards the fault since it was not cleared by Shot 2. The I0dir> stage picks up and starts calculating the operating time for a trip. A "Close" command is dropped after the breaker's "Closed" indication is received and the auto-recloser function starts calculating Shot2 Reclaim Time.
10. The I0Dir> stage trips a third time and gives the REQ2 request to the function. However, as the function is in the process of calculating the Shot2 Reclaim Time when it receives this request, the function tries to move on to the next available shot. Alas, this scheme does not have any more available shots and so the function begins the Final Trip state and drops the AR Running, Shot2 Running and AR2 Requested signals. The function enters the AR Lock-out state to prevent any further requests for reclosing.
11. The circuit breaker is opened and the I0Dir> TRIP signal is released, and simultaneously the REQ2 trip signal for the auto-recloser is released. The function is now in a steady lock-out state and waits for the user to manually reset and re-initialize the function by closing the breaker.

Auto-recloser sequence from Trip with two shots (high-speed fails, time-delayed succeeds).

This auto-recloser scheme has the same starters and shots as the previous example. The setting and signals are also the same. However, in this example the fault persists the high-speed shot but is cleared by the time-delayed shot.

Figure. 5.5.4 - 183. Settings for I0dir> with two shots.

This type of sequence (i.e. two shots required to clear the fault) represents 10...15 % of all faults that occur in MV overhead line networks.

Figure. 5.5.4 - 184. Signal status graph of the semi-permanent earth fault auto-recloser cycle.

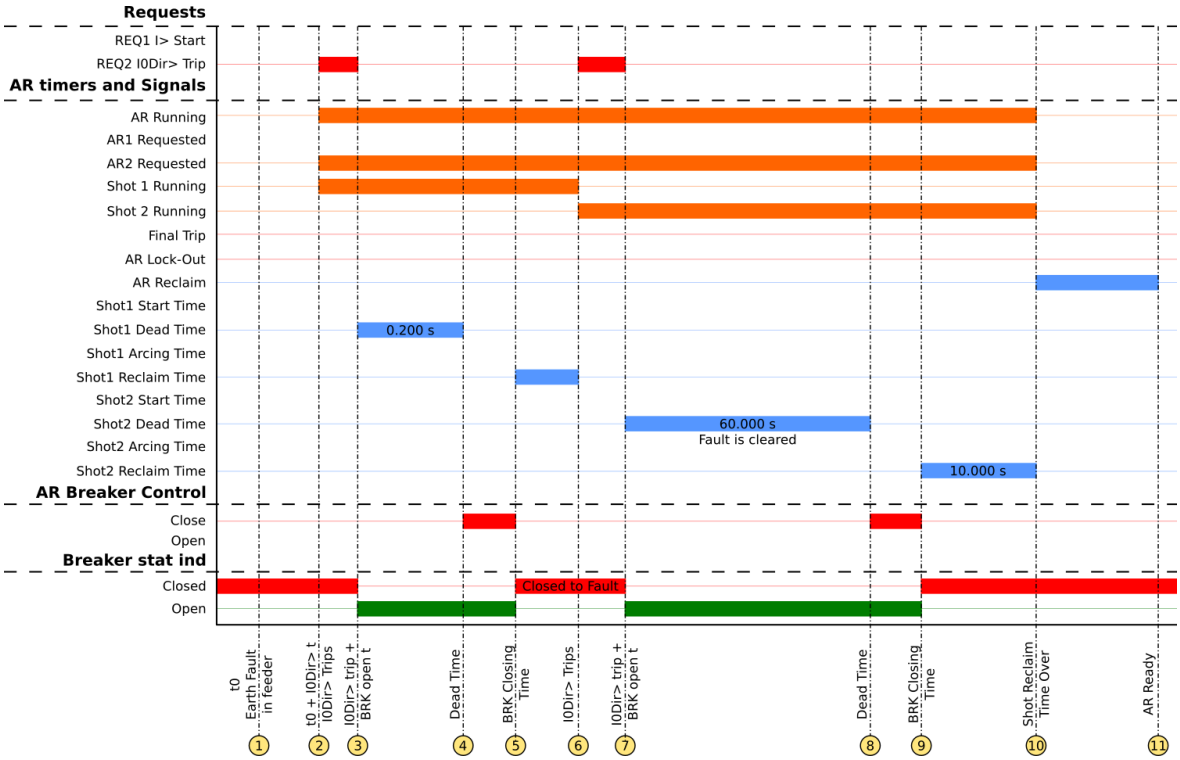

1. An earth fault is found in the protected line causing the I0Dir> protection to start calculating the operating time for a trip.
2. The I0Dir> trips and gives the "Open" command to the breaker's open coil. The auto-recloser function is initiated and the AR Running, AR2 Requested and Shot 1 Running signals are activated.
3. The circuit breaker is opened and the I0Dir> TRIP signal is released and simultaneously the REQ2 trip signal for the auto-recloser is released. The recloser starts calculating the Shot1 Dead Time to close the breaker.
4. The Shot1 Dead Time (200 ms) is exceeded and the function sends a "Close" request to the object breaker: the conditions are met and the breaker's "Close" command is sent to the breaker's close coil.
5. The circuit breaker is closed towards the fault as it was not cleared by Shot 1. The I0dir> stage picks up and starts calculating the operating time for a trip. A "Close" command is dropped after the breaker's "Closed" indication is received and the auto-recloser function starts calculating Shot1 Reclaim Time.
6. The I0Dir> stage trips a second time and gives the REQ2 request to the function. However, as the function is in the process of calculating the Shot1 Reclaim Time when it receives this request, the function moves on to the next available shot (Shot 2) for the request. The Shot2 Running signal is set to active and the Shot1 Running is terminated.
7. The circuit breaker is opened and the I0Dir> TRIP signal is released and simultaneously REQ2 trip signal for the auto-recloser is released. The recloser starts calculating the Shot2 Dead Time to close the breaker.
8. The fault is cleared during Shot2 Dead Time. After that time (60 s) is exceeded, the function sends a "Close" request to the object breaker: the conditions are met and the breaker's "Close" command is sent to the breaker's close coil.
9. The circuit breaker is closed and since the fault has been cleared, no pick-ups are detected. The "Close" command is dropped after the breaker's "Closed" indication is received and the auto-recloser function starts calculating Shot2 Reclaim Time.

© Arcteq Relays Ltd
IM00014

10. The **Shot2 Reclaim Time** (10 s) is exceeded, and so the **AR Running**, **Shot 2 Running** and **AR2 Requested** signals are terminated, and the **AR Reclaim** calculation begins. The difference between auto-reclosing and shot-specific reclaim times is that the function jumps to the next available shot should the fault return. If a fault returns after a successful cycle and the function's AR Reclaim signal is active, the function jumps directly to the Final Trip state and then enters the lock-out state. The user can control this behavior through the function settings. Both reclaim times can be set to 0 s when they are not needed, and the function skips all timers that are set to zero.
11. The **AR Reclaim** time is exceeded and the function is set to "Ready" to wait for the next request.

Auto-recloser sequence from Trip with two shots (high-speed succeeds).

This auto-recloser scheme has the same starters and shots as the two previous examples. The setting and signals are also the same. However, in this example the fault is cleared by the high-speed shot.

Figure. 5.5.4 - 185. Settings for I0dir> with two shots.

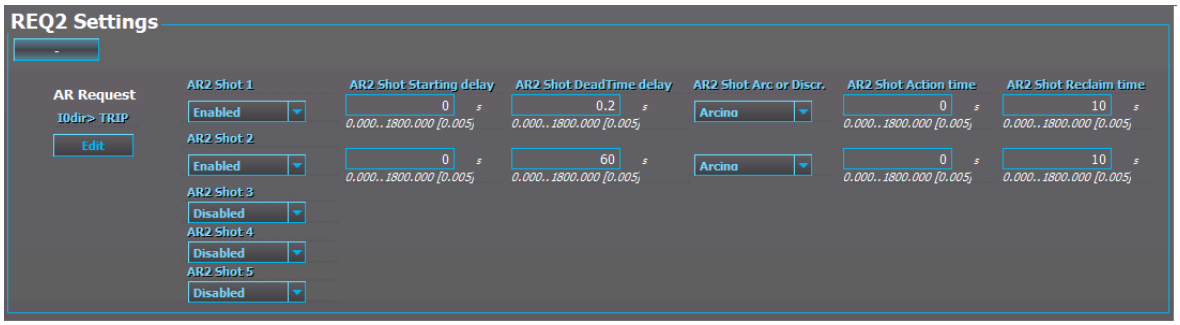

This type of sequence (i.e. the first shot clears the fault) represents 75...85 % of all faults that occur in MV overhead line networks.

Figure. 5.5.4 - 186. Signal status graph of the transient earth fault auto-recloser cycle.

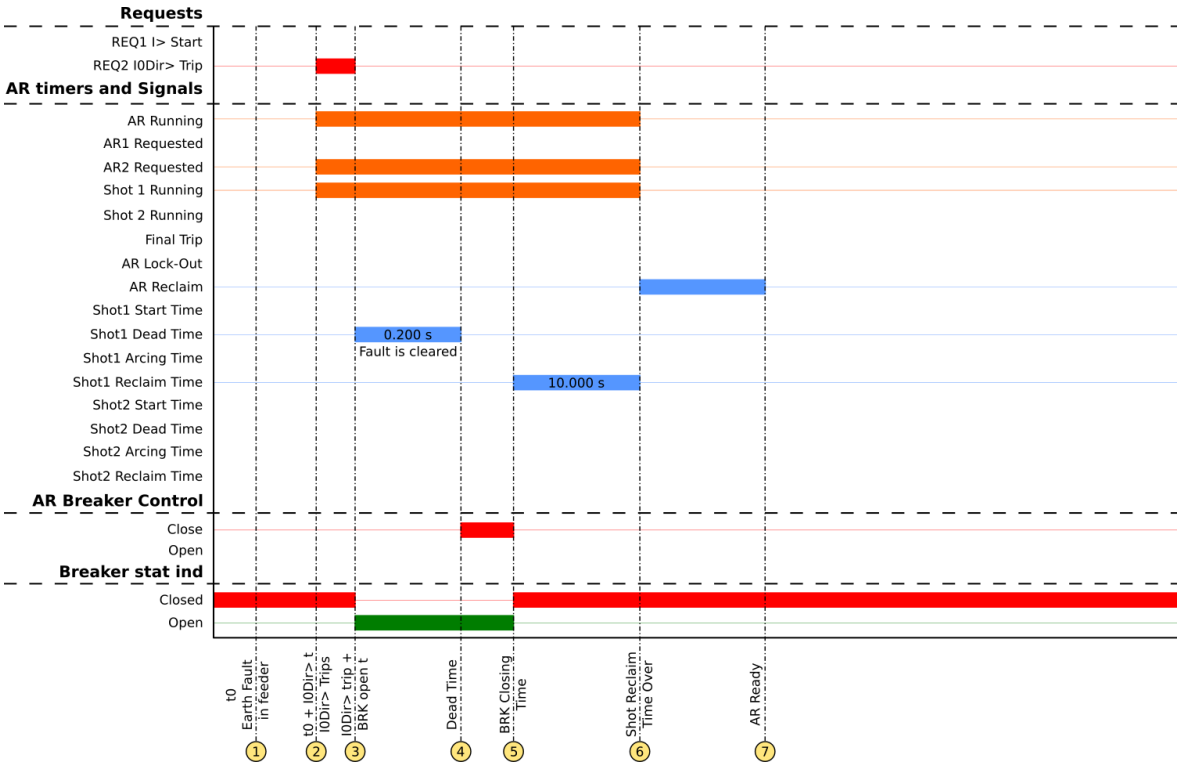

1. An earth fault is found in the protected line causing the I0Dir> protection to start calculating the operating time for a trip.
2. The I0Dir> trips and gives the "Open" command to the breaker's open coil. The auto-recloser function is initiated and the **AR Running**, **AR2 Requested** and **Shot 1 Running** signals are activated.
3. The circuit breaker is opened and the I0Dir> TRIP signal is released and simultaneously the REQ2 trip signal for the auto-recloser is released. The recloser starts calculating the **Shot1 Dead Time** to close the breaker.
4. The fault is cleared during **Shot1 Dead Time** calculation. When that time (200 ms) is exceeded and the function sends a "Close" request to the object breaker: the conditions are met and the breaker's "Close" command is sent to the breaker's close coil.
5. The circuit breaker is closed and since the fault was cleared, no pick-ups are detected. The "Close" command is dropped after the breaker's "Closed" indication is received and the auto-recloser function starts calculating **Shot1 Reclaim Time**.
6. The **Shot1 Reclaim Time** (10 s) is exceeded, and so the **AR Running**, **Shot 2 Running** and **AR2 Requested** signals are terminated, and the **AR Reclaim** calculation begins. The difference between auto-reclosing and shot-specific reclaim times is that the function jumps to the next available shot should the fault returns. If a fault returns after a successful cycle and the function's AR Reclaim signal is active, the function jumps directly to the Final Trip state and then enters the lock-out state. The user can control this behavior through the function settings. Both reclaim times can be set to 0 s when they are not needed, and the function skips all timers that are set to zero. The user can also set is so that AR Reclaim is not used at all after a successful reclosing cycle.
7. The **AR Reclaim** time is exceeded and the function is set to "Ready" to wait for the next request.

Auto-recloser sequence from Start with two shots (both fail).

In this auto-recloser scheme, the START signal from the non-directional overcurrent protection function (I> START) was set up as the operation starter for Request 1 (REQ1). REQ1 has two shots (Shots 1 and 2) enabled with the setting detailed in the image below; the first one is a high-speed shot (0.2 s) that is then followed by a time-delayed shot (120 s). In this scheme the starting delay time is longer that in REQ2's high-speed shot. The shot action time is also longer in REQ1. If the fault persists after both shots, the time determining how long the breaker stays closed is reduced.

Figure. 5.5.4 - 187. Settings for I> with two shots.

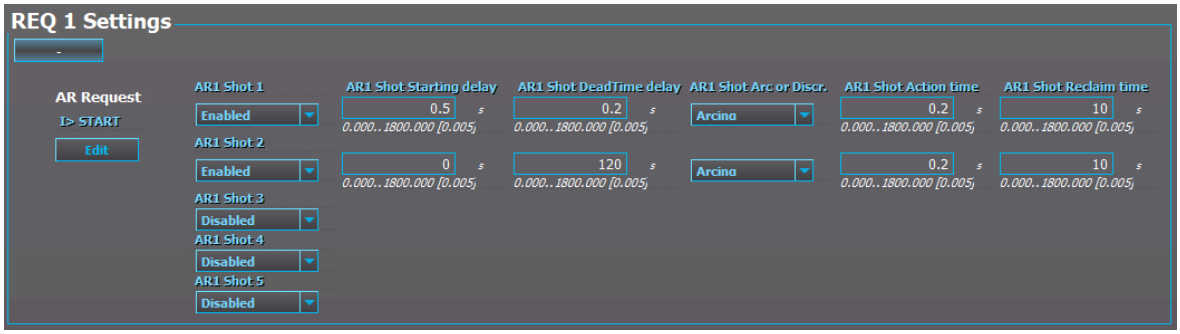

When the START signal is used to initiate the auto-recloser sequence, the fault duration timings are overseen by the auto-recloser function and thus both the starting time and the arcing time need to be set accordingly. The protection's main operating time settings should be longer than the values set to the auto-recloser function; this way the state changes work properly with this function.

© Arcteq Relays Ltd
IM00014

Figure. 5.5.4 - 188. Signal status graph of the permanent overcurrent auto-recloser cycle.

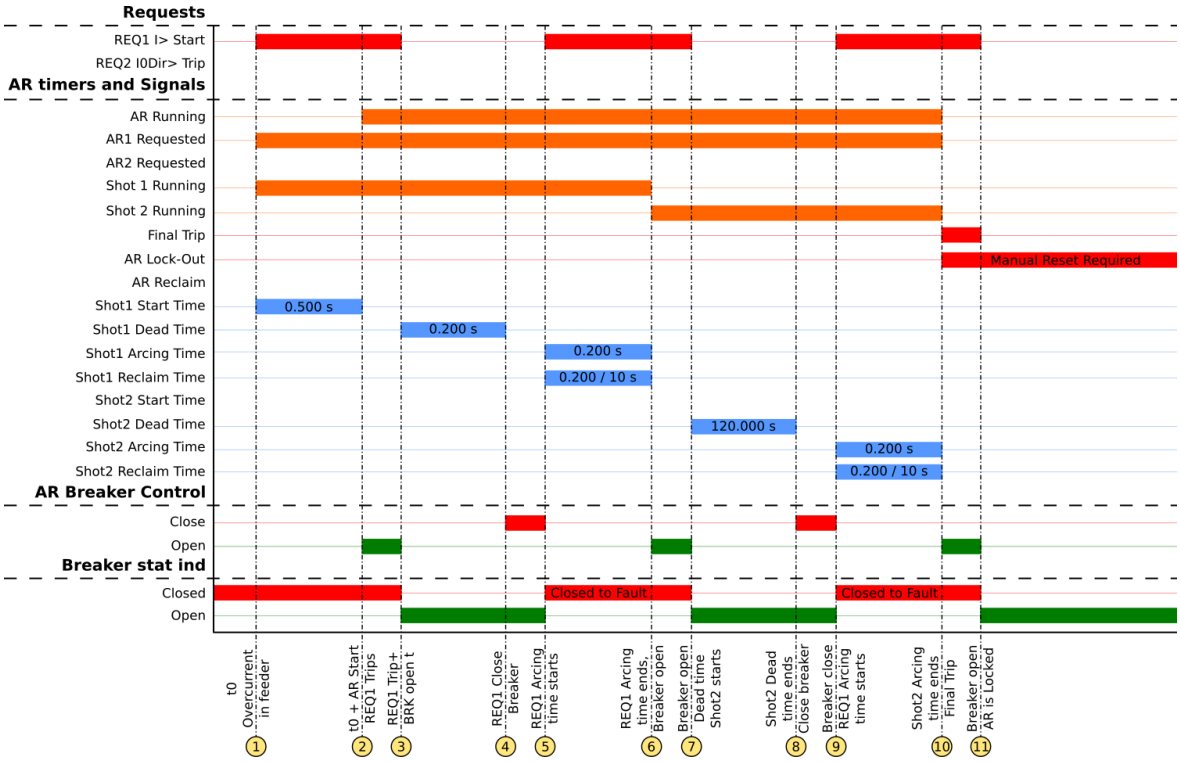

1. An overcurrent is found in the protected line causing the I> protection to pick up. This activates the AR1 Requested signal to begin to calculate the Shot1 Start Time. This activates the Shot 1 Running signal even though the auto-recloser function is not yet running.
2. The Shot1 Start Time (500 ms) for has elapsed and the auto-recloser function starts running (AR Running). This sends an "Open" command to the breaker.
3. The circuit breaker is opened and the I> stage's START signal is released and simultaneously REQ1 trip signal for auto-reclosing is released. The auto-recloser function starts calculating the Shot1 Dead Time to close the breaker.
4. The Shot1 Dead Time (200 ms) is exceeded and the auto-recloser function sends a "Close" request to the object breaker: the conditions are met and the breaker's "Close" command is sent to the breaker's close coil.
5. The circuit breaker is closed and since fault was not cleared, a new pick-up of I> is detected. A "Close" command is dropped after the breaker's "Closed" indication is received and the auto-recloser function starts calculating the Shot1 Reclaim Time simultaneously with the Shot1 Arcing Time.
6. The Shot1 Arcing Time (200 ms) is exceeded which means that the fault is not cleared and the function sends an "Open" command to the breaker. The function deactivates the Shot1 Running signal and instead activates the Shot2 Running signal.
7. The circuit breaker opens and the Shot2 Dead Time calculation begins.
8. The Shot2 Dead Time (120 s) is exceeded and the auto-recloser function sends a "Close" command to the breaker.
9. The circuit breaker is closed towards the fault since it was not cleared by Shot 2. The I> stage picks up and starts calculating the Shot2 Arcing Time for the Final Trip. The "Close" command is dropped after the the breaker's "Closed" indication is received. The auto-recloser function also starts calculating the Shot2 Reclaim Time.
10. The Shot2 Arcing Time (200 ms) is exceeded and and the REQ1 request is given to the function. However, as the function is in the process of calculating the Shot2 Reclaim Time when it receives this request, the function tries to move on to the next available shot. Alas, this scheme does not have any more available shots and so the function begins the Final Trip state and drops the AR Running, Shot2 Running and AR1 Requested signals. The function enters the AR Lock-out state to prevent any further requests for reclosing.

11. The circuit breaker is opened and the I> function's START signal is released, and simultaneously the REQ1 trip signal for auto-reclosing is released. The function is now in a steady lock-out state and waits for the user to manually reset and re-initialize the function by closing the breaker.

Auto-recloser sequence from Start with two shots (high-speed fails, time-delayed succeeds).

This auto-recloser scheme has the same starters and shots as the previous example. The setting and signals are also the same. However, in this example the fault persists the high-speed shot but is cleared by the time-delayed shot.

Figure. 5.5.4 - 189. Settings for I> with two shots.

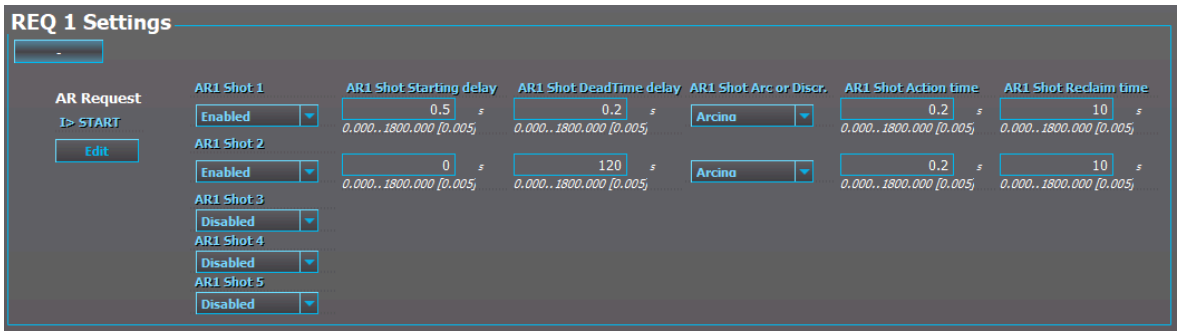

This type of sequence (i.e. two shots required to clear the fault) represents 10...15 % of all faults that occur in MV overhead line networks.

Figure. 5.5.4 - 190. Signal status graph of the semi-permanent overcurrent auto-recloser cycle.

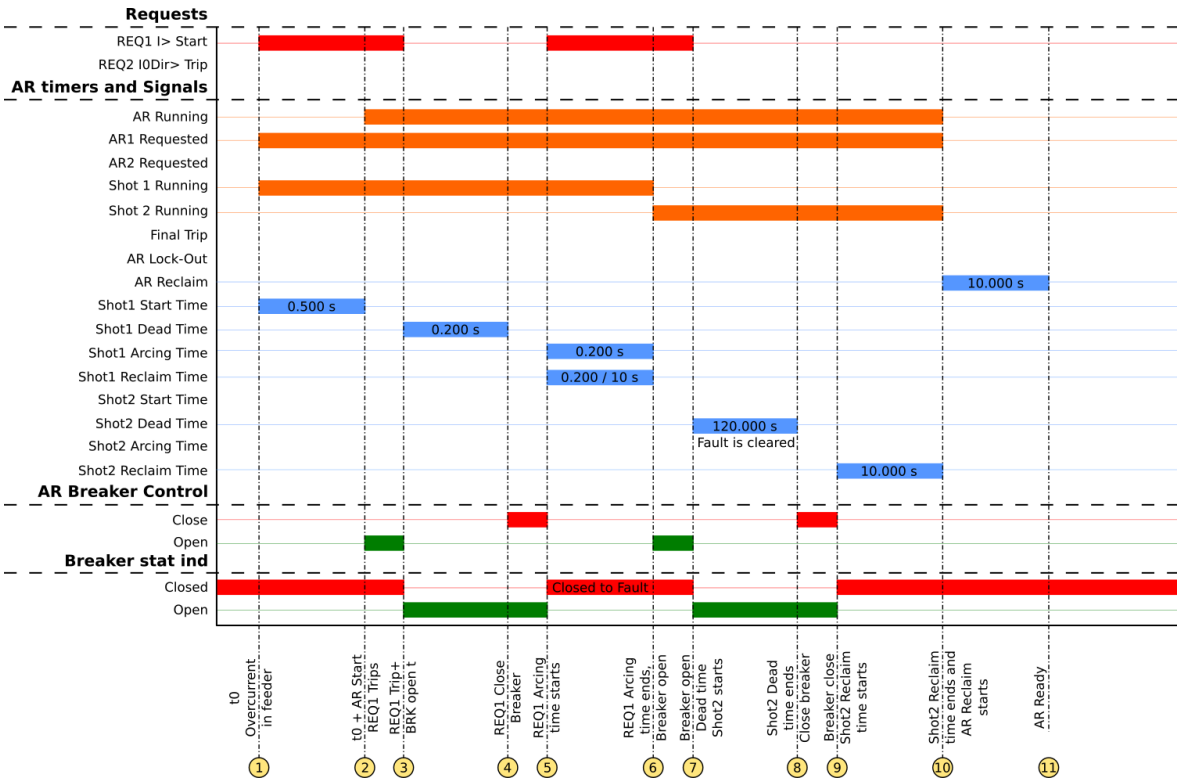

1. An overcurrent is found in the protected line causing the I> protection to pick up. This activates the **AR1 Requested** signal to begin to calculate the **Shot1 Start Time**. This activates the **Shot 1 Running** signal eventhough the auto-recloser function is not yet running.

© Arcteq Relays Ltd
IM00014

2. The Shot1 Start Time (500 ms) for has elapsed and the auto-recloser function starts running (AR Running). This sends an "Open" command to the breaker.
3. The circuit breaker is opened and the I> stage's START signal is released and simultaneously REQ1 trip signal for auto-reclosing is released. The auto-recloser function starts calculating the Shot1 Dead Time to close the breaker.
4. The Shot1 Dead Time (200 ms) is exceeded and the auto-recloser function sends a "Close" request to the object breaker: the conditions are met and the breaker's "Close" command is sent to the breaker's close coil.
5. The circuit breaker is closed and since fault was not cleared, a new pick-up of I> is detected. A "Close" command is dropped after the breaker's "Closed" indication is received and the auto-recloser function starts calculating the Shot1 Reclaim Time simultaneously with the Shot1 Arcing Time.
6. The Shot1 Arcing Time (200 ms) is exceeded which means that the fault is not cleared and the function sends an "Open" command to the breaker. The function deactivates the Shot1 Running signal and instead activates the Shot2 Running signal.
7. The circuit breaker opens and the Shot2 Dead Time calculation begins.
8. The fault is cleared during the Shot2 Dead Time (120 s). When that time is exceeded, the auto-recloser function sends a "Close" command to the breaker.
9. The circuit breaker is closed and since the fault was cleared by Shot 2, no more pick-ups are detected. The "Close" command is dropped after the the breaker's "Closed" indication is received. The auto-recloser function also starts calculating the Shot2 Reclaim Time.
10. The Shot2 Reclaim Time (10 s) is exceeded, and so the AR Running, Shot2 Running and AR1 Requested signals are terminated and the AR Reclaim calculation begins. The difference between auto-reclosing and shot-specific reclaim times is that the function jumps to the next available shot should the fault returns. If a fault returns after a successful cycle and the function's AR Reclaim signal is active, the function jumps directly to the Final Trip state and then enters the lock-out state. The user can control this behavior through the function settings. Both reclaim times can be set to 0 s when they are not needed, and the function skips all timers that are set to zero. The user can also set is so that AR Reclaim is not used at all after a successful recloser cycle.
11. The AR Reclaim time is exceeded and the function is set to "Ready" to wait for the next request.

Auto-recloser sequence from Start with two shots (high-speed succeeds).

This auto-recloser scheme has the same starters and shots as the two previous examples. The setting and signals are also the same. However, in this example the fault is cleared by the high-speed shot.

Figure. 5.5.4 - 191. Settings for I> with two shots.

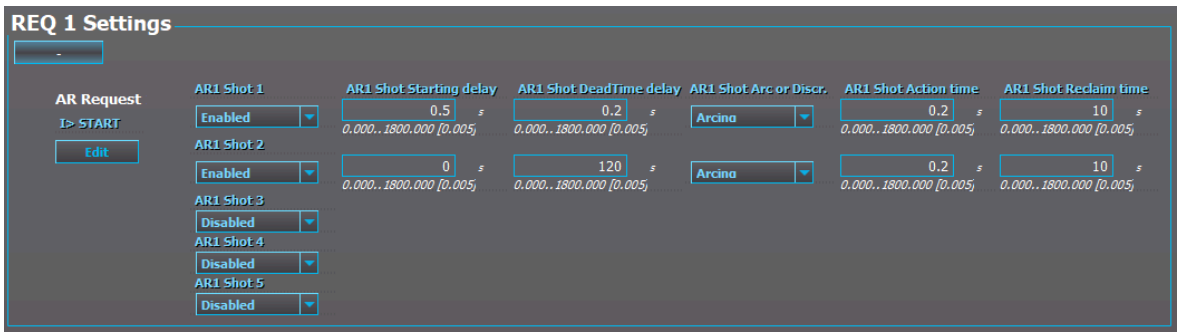

This type of sequence (i.e. the first shot clears the fault) represents 75...85 % of all faults that occur in MV overhead line networks.

Figure. 5.5.4 - 192. Signal status graph of the transient overcurrent auto-recloser cycle.

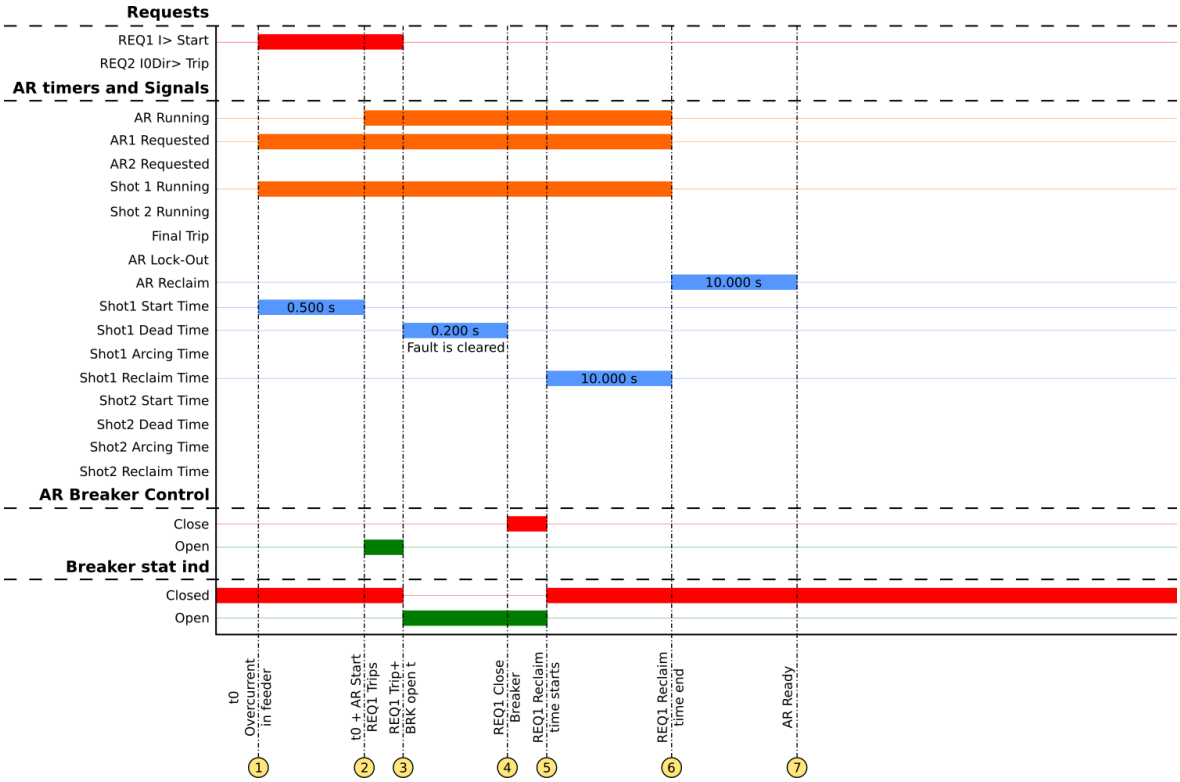

1. An overcurrent is found in the protected line causing the I> protection to pick up. This activates the AR1 Requested signal to begin to calculate the Shot1 Start Time. This activates the Shot 1 Running signal eventhough the auto-recloser function is not yet running.
2. The Shot1 Start Time (500 ms) for has elapsed and the auto-recloser function starts running (AR Running). This sends an "Open" command to the breaker.
3. The circuit breaker is opened and the I> stage's START signal is released and simultaneously REQ1 trip signal for auto-reclosing is released. The auto-recloser function starts calculating the Shot1 Dead Time to close the breaker.
4. The fault is cleared during the Shot1 Dead Time (200 ms). When this time is exceeded, the auto-recloser function sends a "Close" request to the object breaker: the conditions are met and the breaker's "Close" command is sent to the breaker's close coil.
5. The circuit breaker is closed and since the fault was cleared, no pick-ups are detected. A "Close" command is dropped after the breaker's "Closed" indication is received and the auto-recloser function starts calculating the Shot1 Reclaim Time.
6. The Shot1 Reclaim Time (10 s) is exceeded, and so the AR Running, AR1 Requested and Shot 1 Running signals are terminated and the AR Reclaim calculation begins. The difference between auto-reclosing and shot-specific reclaim times is that the function jumps to the next available shot should the fault returns. If a fault returns after a successful cycle and the function's AR Reclaim signal is active, the function jumps directly to the Final Trip state and then enters the lock-out state. The user can control this behavior through the function settings. Both reclaim times can be set to 0 s when they are not needed, and the function skips all timers that are set to zero. The user can also set is so that AR Reclaim is not used at all after a successful recloser cycle.
7. The AR Reclaim time is exceeded and the function is set to "Ready" to wait for the next request.

© Arcteq Relays Ltd
IM00014

Auto-recloser in meshed or ring networks

A typical auto-recloser scheme cannot be applied directly to an overhead line network that has a distributed generation (DG) component; this situation will become more common as renewable power sources become more widespread. Instead, this requires a two-end auto-recloser scheme where the two relays at both ends of the line function in a master–follower operation. The DG power plant must be disconnected from the rest of the network before the breaker's "Close" command is applied; otherwise the plant keeps the fault on during the auto-recloser's dead time and thus fails the reclosing. Additionally, when the main grid is disconnected from the DG power plant, the closing of the breaker is likely to cause phase shifting issues during the dead time.

Figure. 5.5.4 - 193. Auto-reclosing with distributed generation in the line.

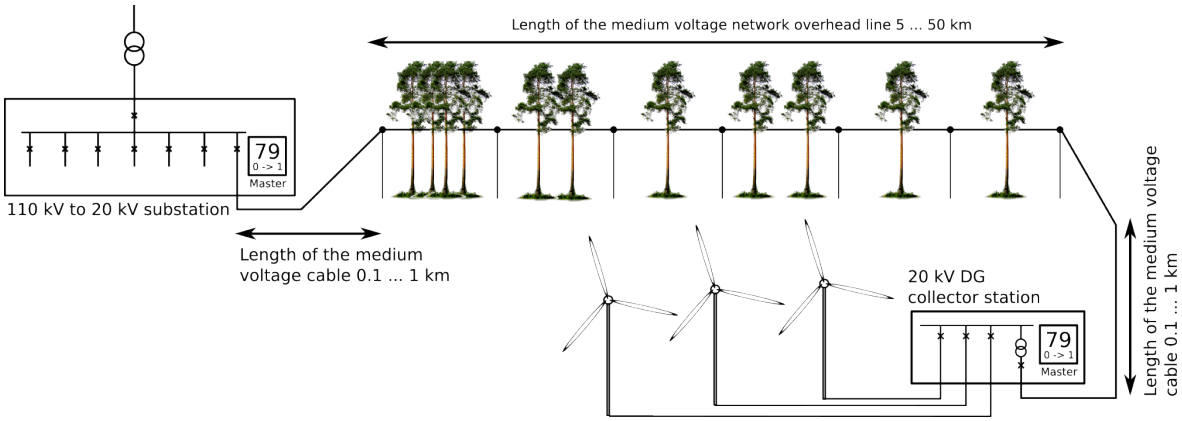

This operation requires a link between the 110/20 kV substation's master relay and the 20 kV collector substation's follower relay. When the auto-recloser function is initiated, the collector station's breaker is opened and remains open until the auto-recloser sequence is over as there is no reason to close the breaker until the auto-recloser cycle has successfully cleared the fault. When the sequence is succesful, the collector substation's breaker is given permission to close after the reclaim time; the breaker should be closed with the Synchrocheck function.

Once the collector substation is disconnected, the previously described basic principles of auto-reclosing apply. This method applies to all meshed or ring networks where the same line is fed power from multiple directions. This problem does not exist for typical consumer (radial) networks.

Arcing time and discrimination time

Generally, after the dead time has elapsed and the breaker is closed by the auto-recloser, this happens: the reclaim time starts calculating and if the process is interrupted by a new reclosing request, the function continues to the next state (the next available shot, or the Final Trip if no more shots are available). However, the user can use the "Shot action time" setting to contol this behavior. The two settings are mutually exclusive: when "Arcing" is selected for a shot, "Discrimination" cannot be selected for the same shot.

The "Arcing" setting is used to control the auto-recloser when the START signal of a stage makes the requests. If the request (e.g. I> START) activates during the reclaim time, an arcing time calculation begins. If the fault persists, the function continues to the next state. If an arcing time calculation begins but stops before the set time has passed, the reclaim calculation continues normally. When that time has elapsed, the auto-recloser function returns either to the general reclaim time or to the Ready mode; the shot is considered successful. The arcing time counter does not reset when the reclaim calculation continues: every time it activates, it continues from where it left off. This means that the time set to the "ARx Shot action time" parameter is a cumulative counter of time allowed before deciding whether a shot is failed or successful.

The auto-recloser is sometimes used in time-coordinated, IDMT-protected networks that have old mechanical relays with current-dependent release times. In these cases the operation of the protection selectivity must be guaranteed by allowing all relay timing devices to completely reset during dead time to maintain the correct time discrimination after reclosing to the fault. Some mechanical IDMT relays can require up to ten seconds (10 s) to reset. When short dead times are required, the relays should reset almost immediately for the current-dependent time grading to operate as expected, and set the discrimination time (instead of the arcing time) to start simultaneously with the reclaim time. If new reclosing requests are made during this discrimination time, the function halts and lets the protection devices operate based on their own settings, and does not interfere with the protection functions' or the breaker's operation. However, this means that the auto-recloser has to be manually reset and the breaker manually closed before further reclosing requests can be made.

Auto-recloser I/O

The main outputs of the auto-recloser function are the control signals OBJECT OPEN and OBJECT CLOSE. The function also reports the recloser status information which is used in the logics, LED indications, and applied operations.

The inputs of the function are the following:

- binary recloser request signals
- blockings
- controlling signals
- the controlled object's monitoring and status signals.

The function generates general time-stamped ON/OFF events to the common event buffer from each of the two (2) output signal as well as from several operational event signals. The time stamp resolution is 1 ms. The function also a resettable cumulative counter for each of the applied reclosing events and requests.

The auto-recloser function can be divided into the starter, shot selector state machine, sorter and shot blocks which operate dynamically during the recloser sequences according to the given settings and input signal monitoring. The behavior of the function can be changed even during sequences that are based on programmed reclosing schemes and on active requests.

© Arcteq Relays Ltd

Figure. 5.5.4 - 194. Simplified function block diagram of the auto-recloser function.

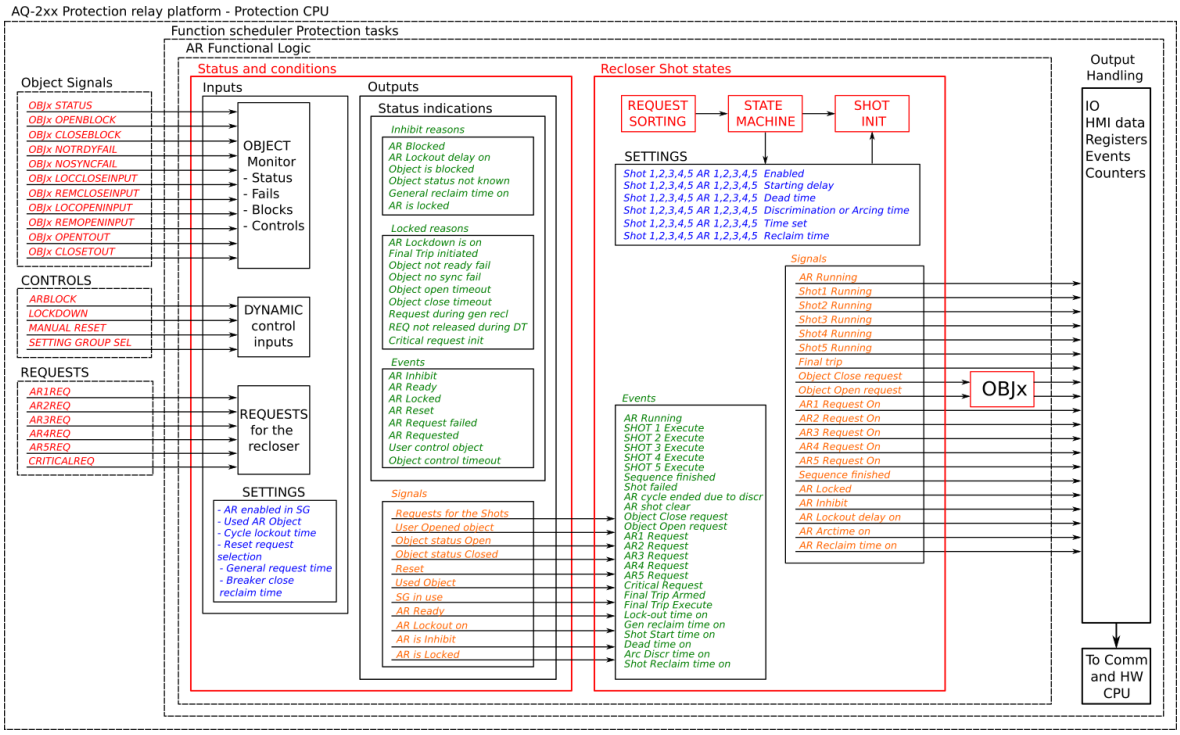

As the diagram above shows, the auto-recloser function is tied to and dependent on the block status information and configuration of the object control and monitoring function. This is why the controlled object must be configured before the auto-recloser function can be used. In AQ-2xx protection systems the object control block supervises all breaker operations: this means that breaker-related functionalitites (e.g. synchrocheck, breaker status monitoring) are not noted separately by the auto-recloser function. If any of these fail during the circuit breaker opening or closing, the object control function reports the event to the auto-recloser function which then takes the corresponding action.

In addition to the previously mentioned cases, the manual control of the breaker (whether open or close during the auto-recloser sequence) also always causes a reset of the auto-recloser. For example, if a breaker is closed manually during dead time towards a fault, the auto-recloser function enters the general reclaim mode and causes a lock-out of the function.

The auto-recloser function gives exhaustive information about its operations and statuses through online indications, events, registered data as well as output signals which can be configured to any output or logical input in the device. If the network configuration is altered during an auto-reclosing sequence, the operation of the auto-recloser function can also be modified accordingly by switching to a setting group that matches the changed network situation.

Input signals of the auto-recloser function

The required auto-recloser scheme determines how many and which setting parameters are needed. All status changes in the input signals (inc. the requests) always cause recorded events, also in the object's registers and the object's continuous status indications. Events can be enabled or disabled according to the application requirements.

Table. 5.5.4 - 221. AR input signals.

Signal	Range	Description
AR On/ Off	Any binary signal in the device	Enables or disables the auto-recloser function with any binary signal selected by the user. The parameter "Use AR On/Off signals" defines whether this input signal is in use or not.
AR Manual reset	Any binary signal in the device	Allows for the manual resetting of the recloser if locked (e.g. due to Final Trip).
AR Locking	Any binary signal in the device	Locks the auto-recloser so that it requires a manual reset before its operation can be set to "Ready".
AR Critical request	Any binary signal in the device	Defines the critical request for the function. If this signal is activated, the auto-recloser goes directly to the locked state the moment the request is received.

Table. 5.5.4 - 222. Request signals.

Signal	Range	Description
AR Request 1 (REQ1)	Any binary signal in the device	The request with the highest priority, it overrides all auto-reclosing requests with lower priorities. When this request signal is activated and other conditions for reclosing are met, a shot is applied.
AR Request 2 (REQ2)	Any binary signal in the device	The request with the second highest priority, it overrides all auto-reclosing requests with lower priorities. When this request signal is activated and other conditions for reclosing are met, a shot is applied.
AR Request 3 (REQ3)	Any binary signal in the device	The request with the third highest priority, it overrides all auto-reclosing requests with lower priorities. When this request signal is activated and other conditions for reclosing are met, a shot is applied.
AR Request 4 (REQ4)	Any binary signal in the device	The request with the fourth highest (and second lowest) priority, it overrides all auto-reclosing requests with lower priorities. When this request signal is activated and other conditions for reclosing are met, a shot is applied.
AR Request 5 (REQ5)	Any binary signal in the device	The request with the lowest priority, it is overridden by all other auto-reclosing requests. When this request signal is activated and other conditions for reclosing are met, a shot is applied.

Output signals of the auto-recloser function

The outputs of the function are only indication signals (*Control → Control functions → Auto-recloser → I/O*). The breaker's "Open" and "Close" commands are controlled by the object control and monitoring function.

© Arcteq Relays Ltd
IM00014

Table. 5.5.4 - 223. AR output signals.

Signal	Description
AR ON AR OFF	The signal "AR ON" is displayed when the auto-recloser function is enabled. The signal "AR OFF" is displayed if the "Use AR On/Off signals" is set to "Yes" and the input of the AR On/Off is inactive.
AR In progress	The signal "AR In progress" is activated and displayed when the function has opened the breaker and is calculating the time towards closing it.
AR1 Request ON	The signal "AR1 Request ON" is activated and displayed when the function is executing a shot requested by REQ1.
AR2 Request ON	The signal "AR2 Request ON" is activated and displayed when the function is executing a shot requested by REQ2.
AR3 Request ON	The signal "AR3 Request ON" is activated and displayed when the function is executing a shot requested by REQ3.
AR4 Request ON	The signal "AR4 Request ON" is activated and displayed when the function is executing a shot requested by REQ4.
AR5 Request ON	The signal "AR5 Request ON" is activated and displayed when the function is executing a shot requested by REQ5.
AR Running	The signal "AR Running" is activated and displayed when the function is in Running mode.
AR Shot 1 Running	The signal "AR Shot 1 Running" is activated and displayed when the function is executing Shot 1.
AR Shot 2 Running	The signal "AR Shot 2 Running" is activated and displayed when the function is executing Shot 2.
AR Shot 3 Running	The signal "AR Shot 3 Running" is activated and displayed when the function is executing Shot 3.
AR Shot 4 Running	The signal "AR Shot 4 Running" is activated and displayed when the function is executing Shot 4.
AR Shot 5 Running	The signal "AR Shot 5 Running" is activated and displayed when the function is executing Shot 5.
AR Sequence finished	The signal "AR Sequence finished" is activated and displayed when the function has closed the breaker after the last shot and is waiting for the Final Trip to occur or for the reclaim time to run out.
AR Final Trip	The signal "AR Final Trip" is activated and displayed when the function has executed the Final Trip command.
AR Dead time ON	The signal "AR Dead time ON" is activated and displayed when the function has opened the breaker and is calculating the time towards closing it.
AR Arcing time ON	The signal "AR Arcing time ON" is activated and displayed when the function is calculating the arcing time.
AR Reclaim time ON	The signal "AR Reclaim time ON" is activated and displayed when the function is calculating the reclaim time.

Signal	Description
AR Ready	The signal "AR Ready" is activated and displayed when the function is ready to execute the auto-reclosing sequence if a fault is detected.
AR Lockout after successful sequence	The signal "AR Reclaim time ON" is activated and displayed when the auto-recloser sequence has been successful but a new fault was detected before the lock-out time was depleted. No new sequence will be started while this signal is active, instead the function goes into the locked mode.
AR Operation inhibit	The signal "AR Operation inhibit" is activated and displayed when the function is in Inhibit mode.
AR Locked	The signal "AR Locked" is activated and displayed when the function is in Locked mode.

Setting parameters

The auto-recloser function has settings that the user can freely configure. The setting cover all areas of the function so that the user can control the operational details of the function as needed. The function's operation can be static or dynamic depending on the setting group that is in use. The function has both general settings and active settings concerning requests and shots. The general settings control the desired object selection as well as the general behavior of the function in different operating schemes.

Table. 5.5.4 - 224. AR Status and basic settings.

Setting	Range	Default	Description
Auto-recloser [79] Mode	• Disabled • Enabled	Disabled	Enables and disables the auto-recloser function in the configuration.
Use AR On/Off signals	• Yes • No	No	Selects whether or not the AR ON and AR OFF signals are used. If set to "No" the auto-recloser is always in use. If set to "Yes" binary signal set to "AR ON/OFF" has to be active for the auto-recloser to be enabled.

© Arcteq Relays Ltd
IM00014

Setting	Range	Default	Description
AR Status	• AR is inhibit • AR is ready • AR is locked • AR is running • AR is not running • Lock out delay is running • Reclaim time counting • Start time counting • Dead time counting • Arcing or discr. time counting • Reclaim time counting • AR1 Requested • AR2 Requested • AR3 Requested • AR4 Requested • AR5 Requested • Executing Shot1 • Executing Shot2 • Executing Shot3 • Executing Shot4 • Executing Shot5 • Shot Clear	-	When clicked open, displays the status of the function.
Timer active	• - • AR Lockout • AR Reset Reclaim • AR Start Delay • AR Dead Time • AR Discrimination • AR Shot Reclaim	-	When the function is counting down towards any action, this parameter displays what is the next expected action when the "AR Timer value" reaches zero.
AR Timer value	0...1800.00s	0s	When the function is counting down towards any action, this parameter displays how much time is left until the action is executed. The "Timer active" setting displays what is the action when this timer reaches zero.

Table. 5.5.4 - 225. AR General settings.

Setting	Range	Step	Default	Description
Object for AR	• Object 1 • Object 2 • Object 3 • Object 4 • Object 5	-	Object 1	Defines the monitored and/or controlled object, and the monitoring and/or controlling signals issued. This selection can be changed via the device's setting group selection in real time.
AR Enabled in SG	• Disabled • Enabled	-	Disabled	Enables and disables the auto-recloser in the current setting group. Can be enabled and disabled in each setting group independently. This selection can be changed via the device's setting group selection in real time.
Require manual resetting	• Required • Obj Close CMD resets	-	Required	Defines the auto-recloser resetting after locking (Final trip, error condition). Resetting can be set to be only done manually with a user defined signal, or it can be reset by a general breaker "Close" command (from any source). This selection can be changed via the device's setting group selection in real time.
Successful reclose start general reclaim	• Only shot reclaim • Shot reclaim and general reclaim	-	Only shot reclaim	Defines whether the auto-recloser runs after a successful reclose (inc. shot reclaim time), or whether it enters the locked state after a request for auto-reclosing is applied. If "Shot reclaim and general reclaim" is selected, this selection defines the minimum time allowed between auto-reclosing cycles without changing the shot-specific reclaim times. This selection can be changed via the device's setting group selection in real time.
Lock-out time ("Lockout after successful AR")	0.000…1800.000s	0.005s	0.000s	Defines the lock-out time after a successful reclosing. When set to 0.00 s, the recloser goes directly into the "Ready" state after a successful reclosing. If this time is running while a new reclosing request is applied, the auto-recloser opens the breaker and enters the locked state to prevent further reclosing attempts. This selection can be changed via the device's setting group selection in real time.
Object close reclaim time	0.000…1800.000s	0.005s	10.000s	Defines the "Close" reclaim time of the object. This time starts when the object is manually closed or when the general reclaim time is selected after a successful auto-reclosing. If an auto-reclosing request is applied during this time, the auto-recloser enters the locked state to prevent further reclosing attempts. This selection can be changed via the device's setting group selection in real time.

Table. 5.5.4 - 226. Auto-recloser shot settings.

Setting	Range	Step	Default	Description
ARx Shot x	• Disabled • Enabled	-	Disabled	Enables/disables Shot x for request ARx. If "Disabled", the ARx request skips Shot 1 and moves on to the next enabled shot. If "Enabled", the ARx request executes a shot according to Shot 1 settings. This selection can be changed via the device's setting group selection in real time.

© Arcteq Relays Ltd
IM00014

Setting	Range	Step	Default	Description
ARx Shot starting delay	0.000…1800.000s	0.005s	0.000s	Defines the starting delay of the shot, i.e. the minimum time an ARx request has to be active before openign the breaker and entering the dead time delay counting. This setting is used only when the ARx request comes from the function's START signal. If the function's TRIP request starting delay in not 0.000 s, the auto-recloser is prevented from starting. Whenever the shot is not the first one, this setting should be set to 0.000 s. This selection can be changed via the setting group selection in real time.
ARx Shot dead time delay	0.000…1800.000s	0.005s	0.000s	Defines the dead time delay of the shot, i.e. the breaker's "Open" time before the auto-recloser closes the breaker. The time calculation starts from the breaker's "Open" signal. This selection can be changed via the device's setting group selection in real time.
ARx Shot Arc or Discr.	• Arcing • Discrimination	-	Arcing	Determines what happens when a fault persists after a dead time when the breaker is closed. Can be chosen between arcing and discrimination behavior; the selection depends on the application. When "Arcing" time is selected, the auto-recloser keeps the breaker closed until Action time is spent (also with Discrimination time). If a new request received during the Action time calculation, the auto-recloser locks out during the reclaim time. This selection can be changed via the device's setting group selection in real time.
ARx Shot action time	0.000…1800.000s	0.005s	0.000s	Defines the action time for the shot after dead time and after the breaker is closed, i.e. the maximum arcing time or discrimination time when the reclaim time is running. When set to 0.000 s, the "Arcing" or "Discrimination" time is disabled in the auto-recloser scheme. This setting can be changed via the device's setting group selection in real time.
ARx Shot reclaim time	0.000…1800.000s	0.0005s	0.000s	After the dead time has elapsed and the breaker is closed by the auto-recloser, the reclaim time starts calculating. If the process is interrupted by a new reclosing request, the function continues to the next shot.

Figure. 5.5.4 - 195. Auto-recloser shot setting parameters.

The auto-recloser function's shot settings are grouped into corresponding rows to make the setting of each shot straightforward. From the settings the user can see how the reclosing cycle is executed by each request, which functions initiate requests, and which shots and requests are in use.

© Arcteq Relays Ltd
IM00014

The setting example in the image above presents a two-shot auto-recloser. One can see that the REQ1 is started by I> START signal. The starting delay is 500 ms, followed by a 200 ms dead time; after a 200 ms "Arcing" time and a 10 s reclaim time Shot 1 is executed. If Shot 1 fails, there is a 120 s dead time, a 200 ms "Arcing" time and a 10 s reclaim time before Shot 2 is executed. If Shot 2 fails, the auto-recloser initiates the Final Trip. In REQ2, the settings are otherwise the same, except I> TRIP and I0dir> TRIP are used to activate the request, Shot 1 does not have a starting delay, the dead time delay for Shot 2 is different and the action time for both shots is zero. REQ3 has just one shot with a 60 second dead time and a 30 ms shot reclaim. If REQ4 or REQ5 are activated, no shots are executed as none are set.

Inhibit and Locked states of the auto-recloser function

The auto-recloser function can have several reasons to go into "Lock-out" and "Inhibit" states where reclosing cannot be allowed for some reason. When the function enters the "Not ready" state, it gives an indication of the reason why it cannot be in the "Ready" state in order to quickly rectify whatever is causing the problem of the functions operation. The reason is indicated in the auto-recloser function's *Registers* menu.

The Inhibit reasons for the auto-recloser are the following:

- AR is blocked (from Blocking input)
- AR is not enabled (signal connected to "AR ON/OFF" is not active)
- AR is calculating the lock-out delay
- The object "Open" or "Close" command is blocked
- The object status is not known ("intermediate" or "bad" status)
- General reclaim time is running
- AR is locked

When the auto-recloser function is in the "Inhibit" state, it returns to the "Ready" state when the reason for the inhibition is removed.

The Lock-out reasons for the auto-recloser are the following:

- The "AR Locked" signal is initiated (from "AR Locking" input)
- The Final Trip signal is given
- The "object not ready" failed within a given time (from Object)
- The "object no sync" failed within a given time (from Object)
- The object's "Open" timeout (from Object)
- The object's "Close" timeout (from Object)
- AR request initiated during General reclaim time
- AR request was not released during Dead Time
- Critical request initated in any state of the auto-reclosing cycle

When the auto-recloser function is in the "Locked" state, it can be recovered only through by reset input, or by manually resetting the breaker. This depends on what the "Require manual resetting" parameter's setting is.

Displaying auto-reclosing timers in MIMIC view

The user can enable timers to be displayed in the MIMIC view. Enable the AR timer value at *Tools → Events and logs → Set alarm events* (see the image below). The timer displays the reclaim time and the dead time delay.

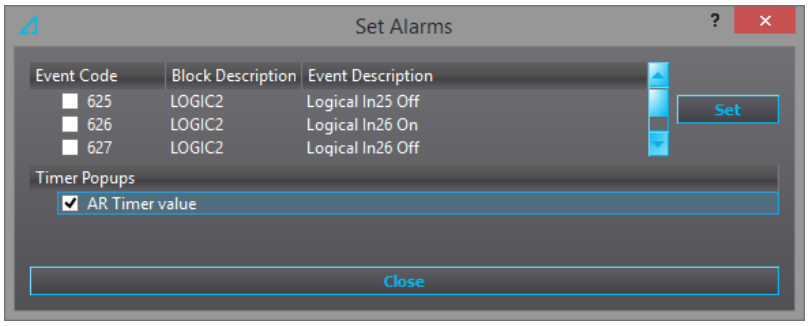

Events and registers

The auto-recloser function (abbreviated "AR" in event block names) generates events and registers from the status changes in the events listed below. The user can select which event messages are stored in the main event buffer: ON, OFF, or both. The events triggered by the function are recorded with a time stamp.

Table. 5.5.4 - 227. Event messages.

Event block name	Event names
AR1	AR Ready ON/OFF
AR1	AR Locked reset
AR1	AR Reclosing request rejected ON/OFF
AR1	AR Reclosing request ON/OFF
AR1	User-operated Object AR halted and reset
AR1	Object failure, AR locked
AR1	Shot failed
AR1	AR cycle ends due to a discrimination request
AR1	AR Shot clear
AR1	Object "Close" request ON/OFF
AR1	Object "Open" request
AR1	Inhibit condition ON/OFF
AR1	Locking condition ON/OFF
AR1	AR1 Request ON/OFF
AR1	AR2 Request ON/OFF
AR1	AR3 Request ON/OFF
AR1	AR4 Request ON/OFF
AR1	AR5 Request ON/OFF
AR1	Critical request ON/OFF
AR1	AR Running ON/OFF

© Arcteq Relays Ltd

Event block name	Event names
AR1	Shot 1 Execute ON/OFF
AR1	Shot 2 Execute ON/OFF
AR1	Shot 3 Execute ON/OFF
AR1	Shot 4 Execute ON/OFF
AR1	Shot 5 Execute ON/OFF
AR1	Seqeunce finished, the Final trip armed
AR1	Final trip executed ON/OFF
AR1	Lock-out time ON/OFF
AR1	General reclaim time ON/OFF
AR1	Shot start time ON/OFF
AR1	Dead time ON/OFF
AR1	Arc Discr time ON/OFF
AR1	Shot reclaim time ON/OFF
AR1	Sequence finished OFF
AR1	AR ON/OFF
AR1	AR Running (DT) ON/OFF

The function registers its operation into the last twelve (12) time-stamped registers. The register of the function records the ON event process data from statuses, commands, etc.

The table below presents the structure of the auto-recloser function's register content.

Table. 5.5.4 - 228. Register content.

Register	Description
Date and time	dd.mm.yyyy hh:mm:ss.mss
Event	Event name
Setting group in use	1...8
Inhibit condition active	Inhibit reason ON
Inhibit condition release	Inhibit reason OFF
Locked condition active	Locked reason ON
Locked condition release	Locked reason OFF
AR status	The status code of the auto-recloser function
Active timer	Timer ON

Register	Description
Active time	The value of the timer

Auto-recloser operation counters

The auto-recloser function keeps statistical track of the operated auto-reclosing cycles as well as of successful and failed shots.

The function records the following counters:

- Shot 1…5 started
- Shot 1…5 requested by AR1…5
- Shots failed
- Final trips
- Shots cleared
- AR started

The counters are cumulative and they update automatically according to the operations of the auto-recloser function. They can be found in the *Statistics* tab at *Control* → *Auto-recloser* → *Registers*.

5.5.5 Zero sequence recloser (U0> RECL; 79N)

When earth fault current is so low that it is not possible for directional earth fault protection functions to detect the direction of the fault, zero sequence recloser control function can be used together with neutral overvoltage (59N) function as a backup for finding an outgoing feeder with a fault while disconnecting as few healthy feeders as possible and reconnecting them back as quickly as possible. Feeders are set up to trip one by one in small time increments. If the fault was not cleared by tripping the feeder the breaker will be closed and the next feeder will be opened. This will go on until faulty feeder is disconnected. No communication between needed between the feeder protection relays.

The blocking signal and the setting group selection control the operating characteristics of the function, i.e. the user or user-defined logic can change function parameters while the function is running. The function has a total of eight (8) setting groups available.

General settings

The following general settings define the general behavior of the function. These settings are static i.e. it is not possible to change them by editing the setting group.

Table. 5.5.5 - 229. General settings of the function.

Name	Range	Default	Description
U0> RECL force status to	• Normal • Block On • Requested On • BK clo cmd On • Bk Closed.U0> blocked On	Normal	Force the status of the function. Visible only when *Enable stage forcing* parameter is enabled in *General* menu.

© Arcteq Relays Ltd
IM00014

Table. 5.5.5 - 230. U0> recloser activation inputs.

Name	Description
Enable input	Input defined here must be active for the recloser to be enabled.
Function trip input	Detection of neutral overvoltage trip (U0> TRIP). Starts the reclosing sequence.
Function blocked input	Detection of neutral overvoltage protection being blocked (U0> BLOCKED). When this input is activated the breaker will be closed after time set to "Reclose time for U0> RECL" has passed. See *Application example* section for more detail.

Operating time characteristics

When zero sequence recloser function detects neutral overvoltage trip it activates a circuit breaker close command after a set time delay. Please note that the zero sequence recloser function actually follows the "Function blocked input" status when counting down towards reclosing. See *Application example* for more details.

Setting group selection controls the operating characteristics of the function, i.e. the user or user-defined logic can change function parameters while the function is running.

Table. 5.5.5 - 231. Operating time characteristics setting parameters.

Name	Range	Step	Description
Reclose time for U0> RECL	0.000...1800.000 s	0.005 s	Breaker reclosing time delay after neutral overvoltage trip. "Function blocked input" signal must stay active for the duration of time delay.

Function outputs

Zero sequence recloser generates output signals listed in the table below. These signals are used together with neutral overvoltage function (59N) inputs and outputs to control the reclosing sequence.

Table. 5.5.5 - 232. Outputs of the zero sequence recloser function.

Name	Description
U0> RECL Blocked	Zero sequence recloser function does not have "Enable input" active. The function will not generate reclosing command.
U0> RECL Active	Zero sequence recloser function has detected a neutral overvoltage trip. Stays active until fault is cleared.
U0> RECL CLOSE	Close command for circuit breaker. Activated after neutral overvoltage trip and time delay set to "Reclose time for U0> RECL" parameter has passed.
U0> RECL BLKU0	Connect to neutral overvoltage protection U0> BLOCK input. Blocks neutral overvoltage protection from opening the breaker after reclosing. Stays active until the fault is cleared.

Application example

Figure. 5.5.5 - 196. Example application of zero sequence recloser. Each feeder has slighly longer operation time delay than the previous one.

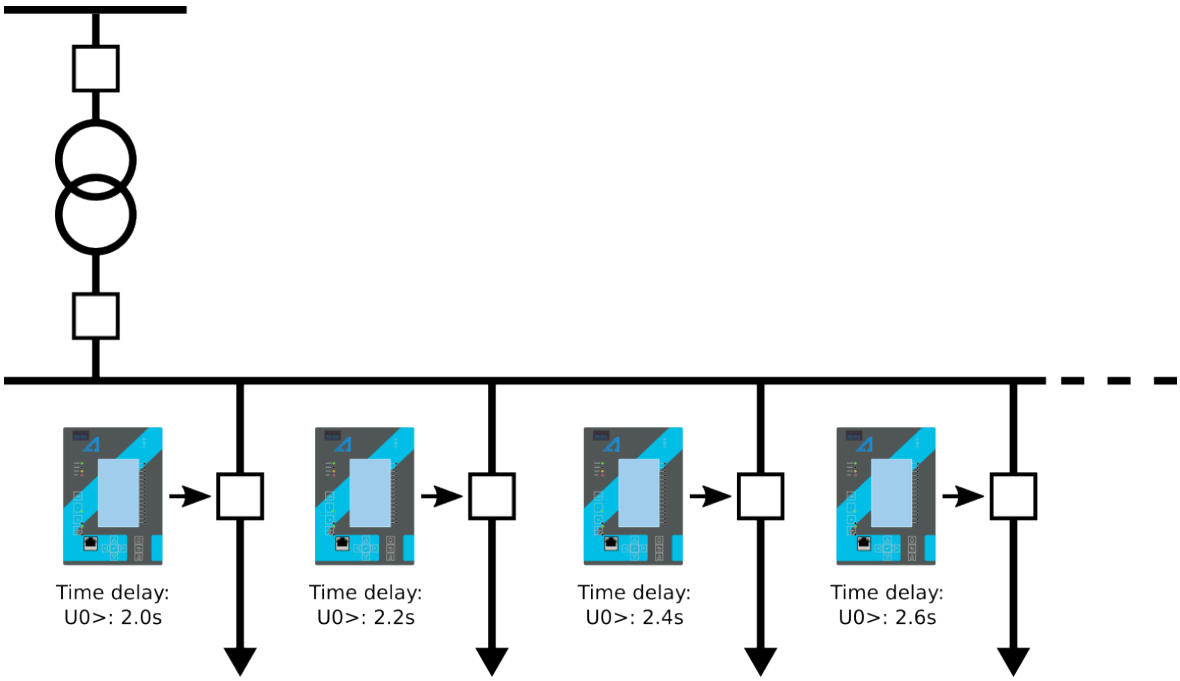

Table. 5.5.5 - 233. Common settings for each feeder.

Setting	Connection
U0> BLOCK input	U0> RECL BLKU0 Circuit breaker open status
U0> TRIP output	Digital output connected to circuit breaker open coil
U0 RECL Enable input	Programmable control switch, digital input or other binary signal
U0 RECL Function trip input	U0> TRIP signal
U0 RECL Function blocked input	U0> BLOCKED signal

From the point of view of first feeder, with the settings used above, if the fault is in the first feeder the following sequence happens:

1. Neutral overvoltage function trips the breaker.
2. Neutral voltage drops. Fault is cleared.

If the fault is not in the first feeder, the following sequence happens:

1. Neutral overvoltage function trips the breaker.
2. Neutral voltage doesn't drop → U0> BLOCKED is activated from fault being still present and circuit breaker being opened → U0> RECL BLKU0 is activated from U0> BLOCKED.
3. Breaker is closed after "Reclose time for U0> RECL" has passed.
4. Both neutral overvoltage protection function and zero sequence reclosing function are blocked until fault is cleared.

© Arcteq Relays Ltd
IM00014

Read-only parameters

The function's *Info* page displays useful, real-time information on the state of the protection function. It is accessed either through the device's HMI display, or through the setting tool software when it is connected to the device and its Live Edit mode is active.

Table. 5.5.5 - 234. Information displayed by the function.

Name	Range	Description
U0> RECL condition	• Normal • Requested • Blocked • Active • BK clo cmd • Bk Closed.U0> blocked	Displays status of the control function.

Events and registers

The zero sequence recloser function (abbreviated "NJK" in event block names) generates events and registers from the status changes in the events listed below. The user can select which event messages are stored in the main event buffer: ON, OFF, or both. The events triggered by the function are recorded with a time stamp.

Table. 5.5.5 - 235. Event messages.

Event block name	Event names
NJK1	U0RECL Request ON/OFF
NJK1	U0RECL Blocked ON/OFF
NJK1	U0RECL Active ON/OFF
NJK1	U0RECL Breaker close request ON/OFF
NJK1	U0RECL U0 Blocking ON/OFF

The function registers its operation into the last twelve (12) time-stamped registers; this information is available for all provided instances separately. The register of the function records the ON event process data for CLOSE and BLOCKED. The table below presents the structure of the function's register content.

Table. 5.5.5 - 236. Register content.

Register	Description
Date and time	dd.mm.yyyy hh:mm:ss.mss
Event	Event name
Setting group in use	1...8
U0> RECL time before close	-
U0> RECL been active	-

5.5.6 Cold load pick-up (CLPU)

The cold load pick-up function is used for detecting so-called cold load situations, where a loss of load diversity has occured after distribution has been re-energized. The characteristics of cold load situations vary according to the types of loads individual feeders have. This means that this function needs to be set specifically according to the load type of the feeder it is monitoring. For example, in residential areas there are relatively many thermostat-controlled devices (such as heating and cooling machinery) which normally run in asynchronous cycles. When restoring power after a longer power outage, these devices demand the full start-up power which can cause the inrush current to be significantly higher than what the load current was before the outage. This is uncommon in industrial environments since the restoring of the production process takes several hours, or even days, and the power level goes back to the level it was before the outage. However, some areas of the industrial network may find the cold load pick-up function useful.

Figure. 5.5.6 - 197. Simplified function block diagram of the cold load pick-up function.

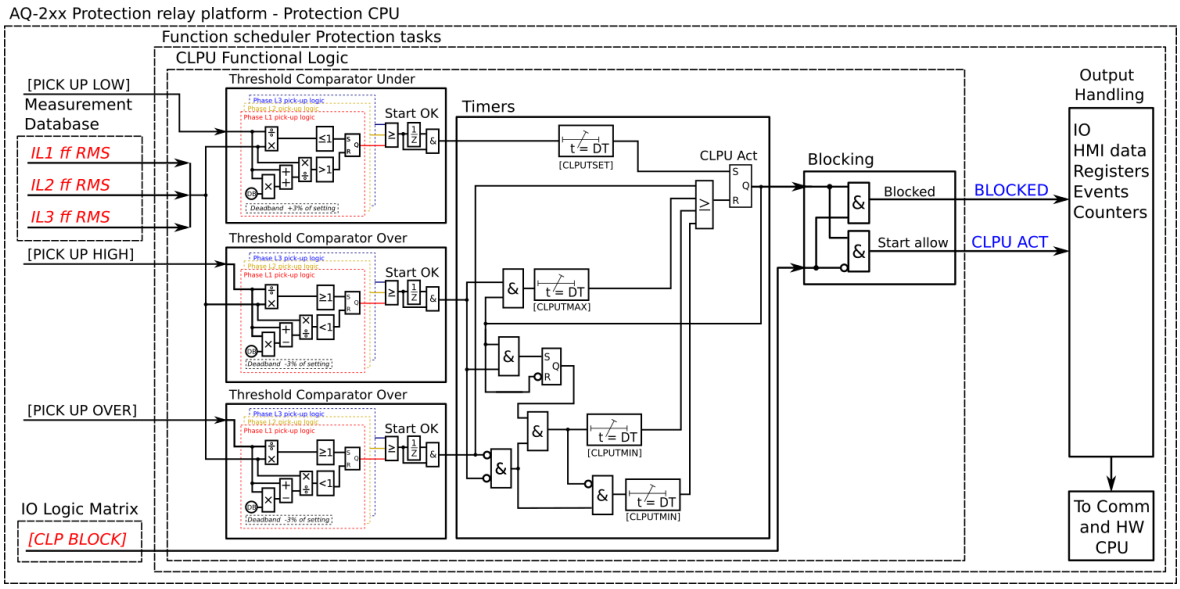

Measured input

The function block uses fundamental frequency component of phase current measurement values.

Table. 5.5.6 - 237. Measurement inputs of the cold load pick-up function.

Signal	Description
I_{L1}RMS	Fundamental frequency component of phase L1 (A) current
I_{L2}RMS	Fundamental frequency component of phase L2 (B) current
I_{L3}RMS	Fundamental frequency component of phase L3 (C) current

© Arcteq Relays Ltd
IM00014

Pick-up settings

The I_{low}, I_{high} and I_{over} setting parameters control the the pick-up and activation of the cold load pick-up function. They define the maximum and minimum allowed measured current before action from the function. The function constantly calculates the ratio between the setting values and the measured magnitude (I_m) for each of the three phases. The reset ratio of 97 % is built into the function and is always relative to the setting value. The setting value is common for all measured phases. When the I_m exceeds the setting value (in single, dual or all phases) it triggers the pick-up operation of the function.

Setting group selection controls the operating characteristics of the function, i.e. the user or user-defined logic can change function parameters while the function is running.

Table. 5.5.6 - 238. Pick-up settings.

Name	Range	Step	Default	Description
I_{low}	0.01…40.00×In	0.01×In	0.20×In	The pick-up setting for low current detection. All measured currents must be below this setting in order for the cold load pick-up signal to be activated.
I_{high}	0.01…40.00×In	0.01×In	1.20×In	The pick-up setting for high current detection. All measured currents must exceed this setting in order for the cold load pick-up signal to be activated.
I_{over}	0.01…40.00×In	0.01×In	2.00×In	The pick-up setting for overcurrent detection. If this setting is exceeded by any of the measured currents, the cold load pick-up signal is released immediately.

Read-only parameters

The function's *Info* page displays useful, real-time information on the state of the protection function. It is accessed either through the device's HMI display, or through the setting tool software when it is connected to the device and its Live Edit mode is active.

Table. 5.5.6 - 239. Information displayed by the function.

Name	Range	Description
CLP condition	• Normal • Curr low • Overcurrent On • CLPU On • CLPU blocked	Displays status of the control function.

Function blocking

The blocking signal is evaluated at the start of each program cycle. The blocking signals are connected to the function's dedicated input, which can be configured in the *IO → Blocking Input Control* tab of the function.

- When the pick-up element activates and the blocking signal is not active, a CLPU ACT signal is generated, and the function starts or continues with the trip time countdown.
- When the pick-up element activates and the blocking signal is active, a BLOCKED signal is generated, and the function does not process the event further.
- When CLPU ACT signal is already active and the blocking input signal becomes active, the CLPU ACT signal is reset and BLOCKED signal is generated. The release time characteristics are then processed in the same way as when the pick-up signal is reset.

The blocking signal needs to reach the device minimum of 5 ms before the set operating delay has passed in order for the blocking to activate in time.

Operating time characteristics

The behavior of the function's operating timers can be set for activation as well as for the situation monitoring and release of the cold load pick-up.

The table below presents the setting parameters for the function's time characteristics.

Table. 5.5.6 - 240. Setting parameters for operating time characteristics.

Name	Range	Step	Default	Description
T_{set}	0.000…1800.000s	0.005s	10.000s	The function's start timer which defines how long the I_{low} condition has to last before the cold load pick-up is activated.
T_{max}	0.000…1800.000s	0.005s	30.000s	The function's maximum timer which defines how long the starting condition can last and for how long the current is allowed to be over I_{high}.
T_{min}	0.000…1800.000s	0.005s	0.040s	The function's minimum timer which defines how long the starting condition has to last at the minimum. If the start-up sequence includes more than one inrush situation, this parameter may be used to prolong the cold load pick-up time over the first inrush. Additionally, this parameter operates as the "reclaim" time for the function in case the inrush current is not immediately initiated in the start-up sequence.

The six examples below showcase some typical cases with the cold load pick-up function.

© Arcteq Relays Ltd
IM00014

Figure. 5.5.6 - 198. Example of timers and pick-up parameters (normal CLPU situation).

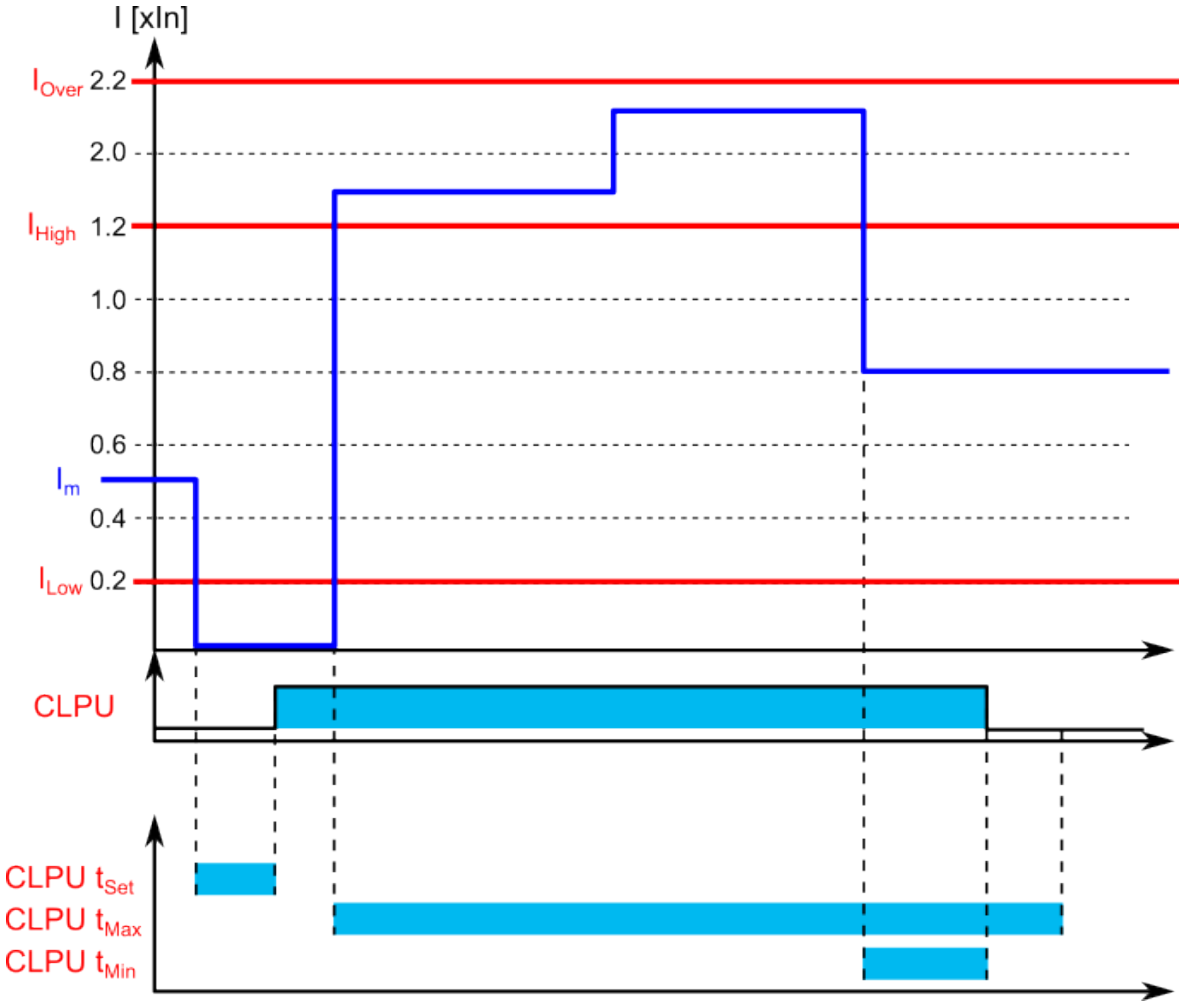

In the example above, the cold load pick-up function activates after the measured current dips below the I_{low} setting and has been there for T_{set} amount of time. When the current exceeds the I_{high} setting value, a timer starts counting towards the T_{max} time. The pick-up current is cleared before the the counter reaches the T_{max} time, when the measured current goes between of I_{low} and the I_{high}. This is when the start-up condition is considered to be over. The cold load pick-up signal can be prolonged beyond this time by setting the T_{min} to a value higher than 0.000 s.

Figure. 5.5.6 - 199. Example of timers and pick-up parameters (no cold load pick-up, I_{low} too short).

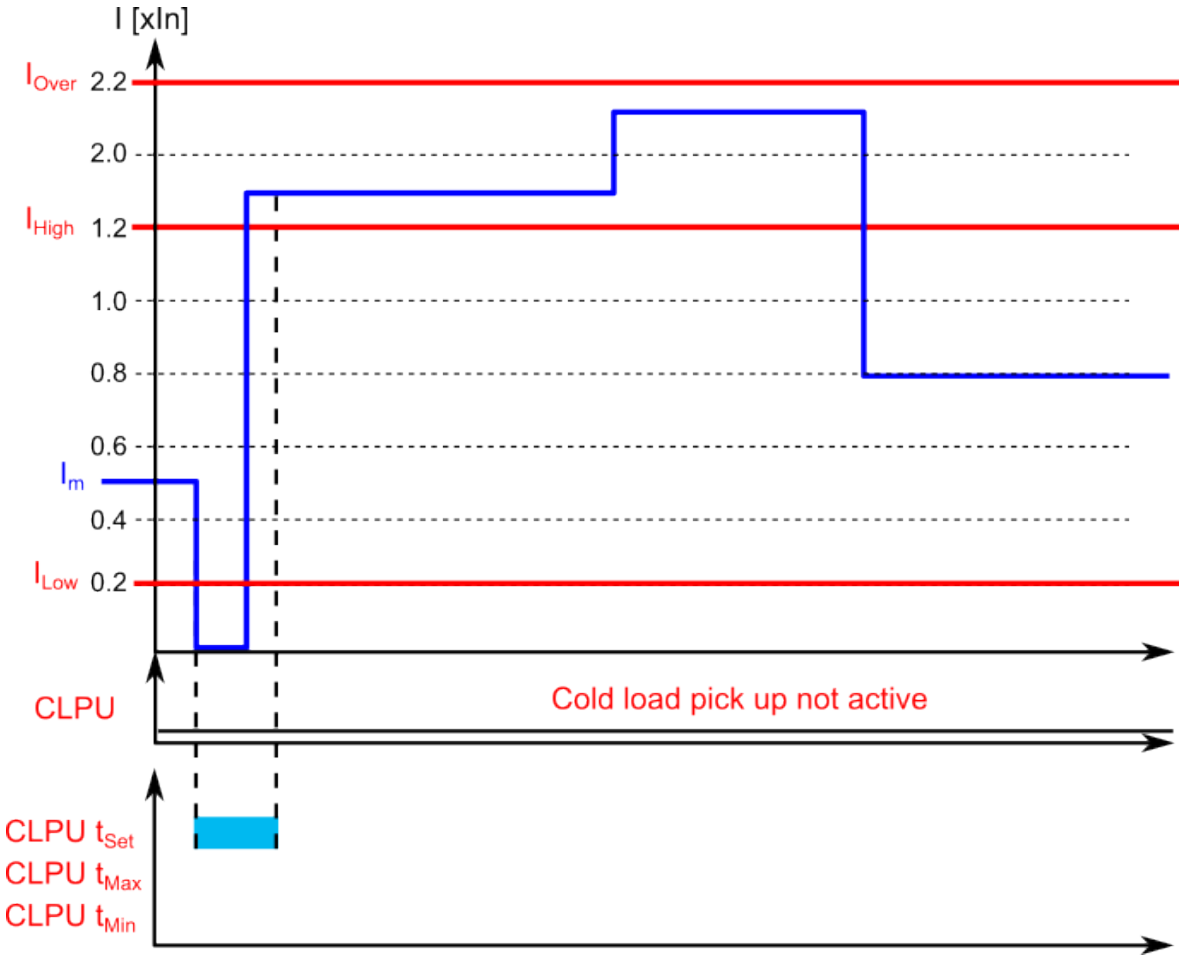

In the example above, the cold load pick-up function does not activate even when the measured current dips below the I_{low} setting, because the T_{set} is not exceeded and therefore no cold load pick-up signal is issued. If the user wants the function to activate within a shorter period of time, the T_{set} parameter can be se to a lower value. If the user wants no delay, the T_{set} can be zero seconds and the operation will be immediate.

© Arcteq Relays Ltd
IM00014

Figure. 5.5.6 - 200. Example of timers and pick-up parameters (activated pick-up and instant release due to overcurrent).

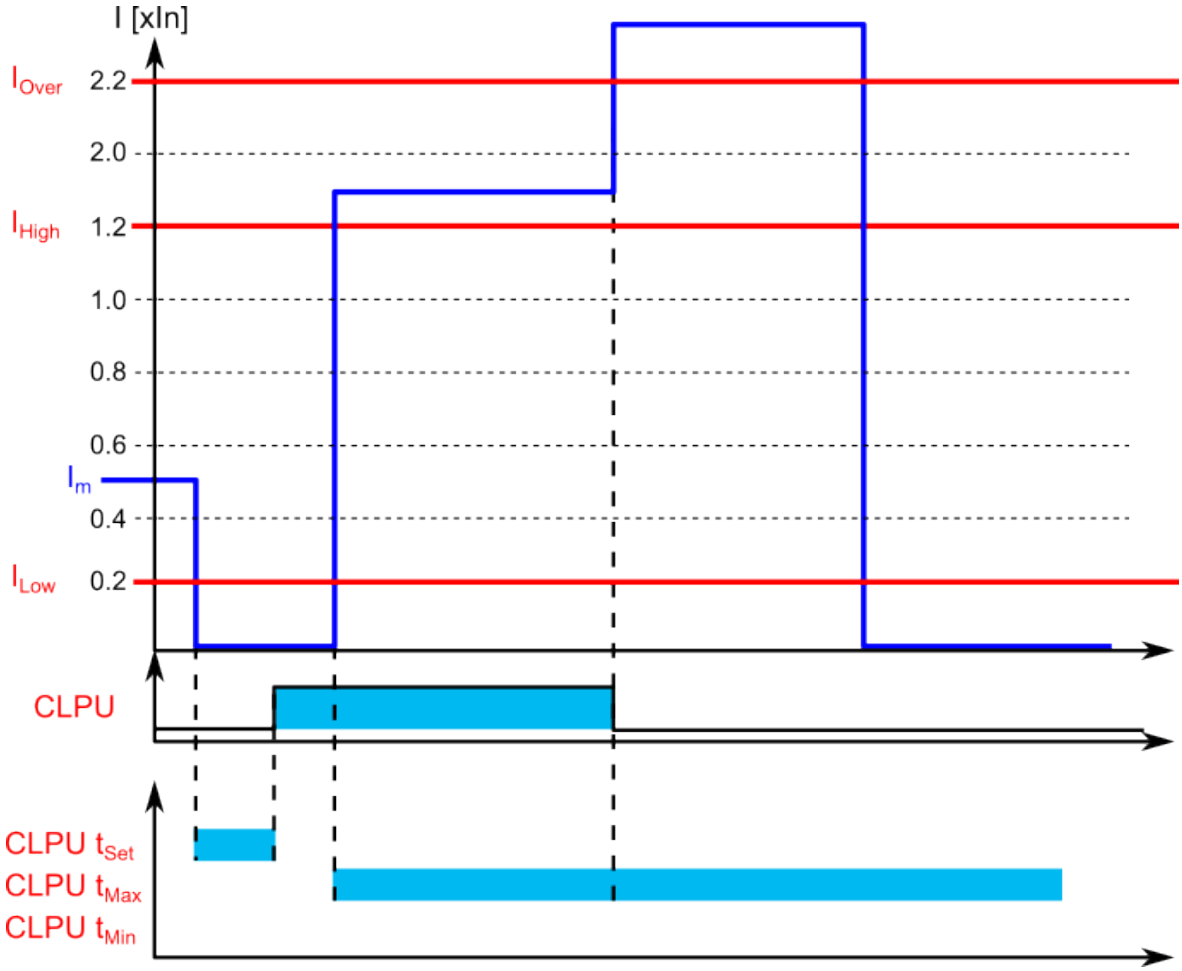

In the example above, the cold load pick-up function activates after the measured current dips below the I_{low} setting and has been there for T_{set} amount of time. When the I_m exceeds the I_{high} setting, a counter starts counting towards the T_{max} time. The measured current exceeds the I_{over} setting during the start-up situation and causes the cold load pick-up signal to be released immediately.

Figure. 5.5.6 - 201. Example of timers and pick-up parameters (activated pick-up and instant release due to too long starting).

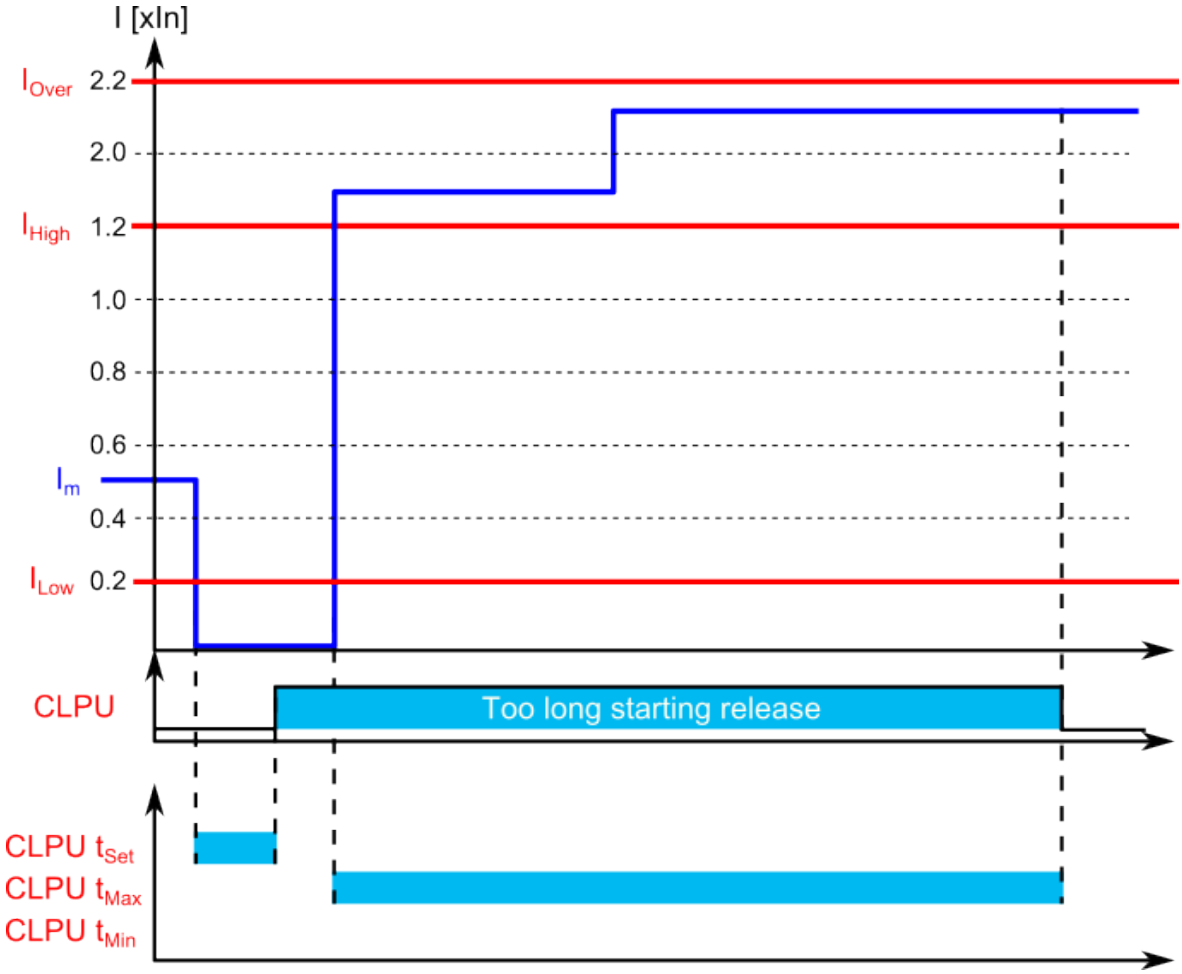

In the example above, the cold load pick-up function activates after the measured current has stayed below the I_{low} setting for a T_{set} amount of time. When the current exceeds the I_{high} setting, a timer starts counting towards the T_{max} time. The measured current stays above the I_{high} setting until the T_{max} is reached, which causes the release of the cold load pick-up signal.

© Arcteq Relays Ltd
IM00014

Figure. 5.5.6 - 202. Example of timers and pick-up parameters (no inrush current detected in the starting).

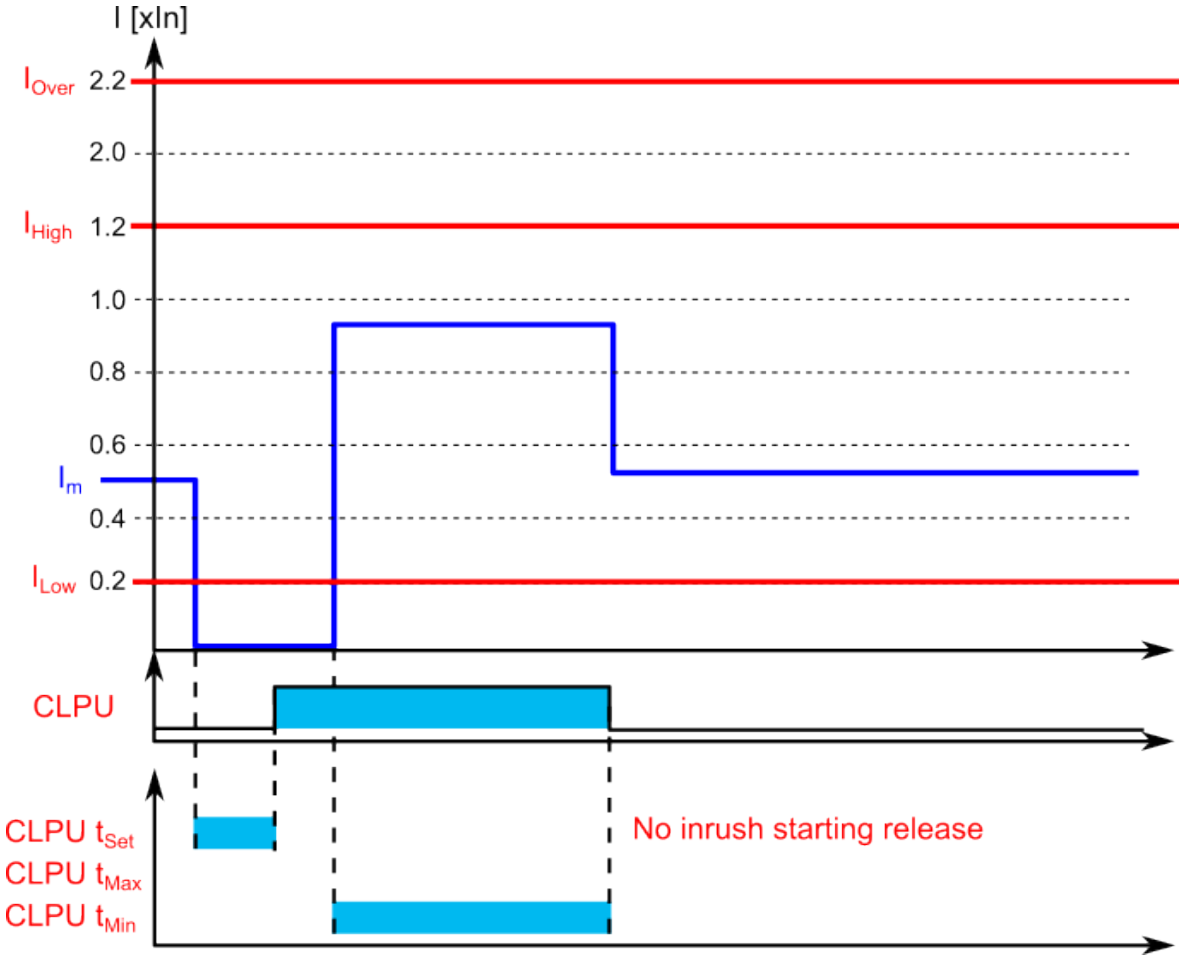

In the example above, the cold load pick-up function activates after the measured current has stayed below the I_{low} setting for a T_{set} amount of time. The current stays between the I_{low} setting and the I_{high} setting, so the cold load pick-up signal is active for T_{min} time. As no inrush current is detected during that time, the signal is released.

Figure. 5.5.6 - 203. Example of timers and pick-up parameters (an inrush current detected during T_{min} time).

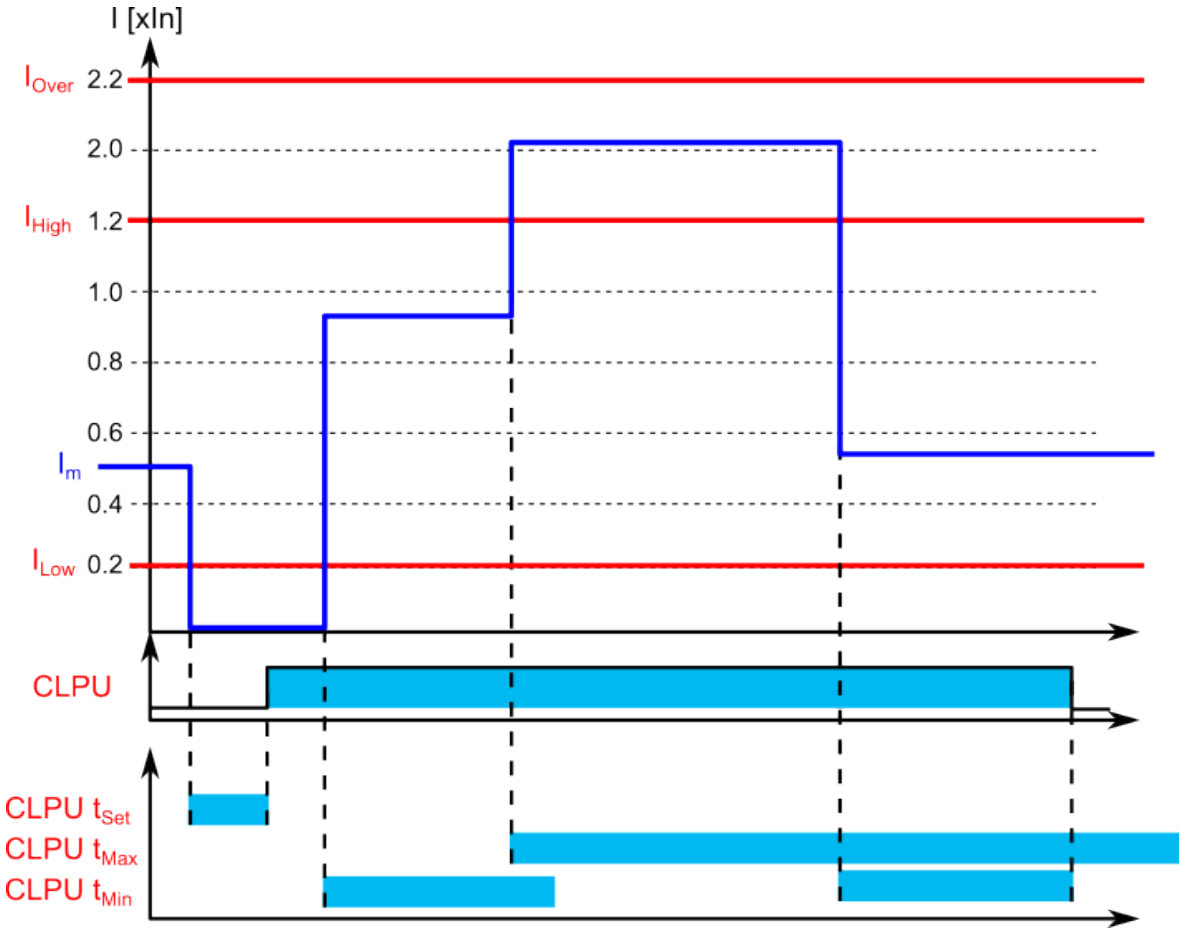

In the example above, the cold load pick-up function activates after the measured current has stayed below the I_{low} setting for a T_{set} amount of time. The current increases to between the I_{low} setting and the I_{high} setting, which causes a counter to start counting towards the T_{min} time. Before the counter reaches T_{min}, the current exceeds the I_{high} setting, which causes a counter to start counting towards the T_{max} time. The cold load pick-up signal remains active until the T_{max} has been reached, or until the start-up is over and the T_{min} time is over.

Events and registers

The cold load pick-up function (abbreviated "CLP" in event block names) generates events and registers from the status changes in the events listed below. The user can select which event messages are stored in the main event buffer: ON, OFF, or both. The events triggered by the function are recorded with a time stamp.

The function's outputs can be used for direct I/O controlling and user logic programming. The function also provides a resettable cumulative counter for the CLPU ACT and BLOCKED events.

Table. 5.5.6 - 241. Event messages.

Event block name	Event names
CLP1	LowStart ON/OFF
CLP1	HighStart ON/OFF
CLP1	LoadNormal ON/OFF

© Arcteq Relays Ltd
IM00014

Event block name	Event names
CLP1	Overcurrent ON/OFF
CLP1	CLPUActivated ON/OFF
CLP1	Block ON/OFF

The function registers its operation into the last twelve (12) time-stamped registers. The register of the function records the ON event process data for ACTIVATED, BLOCKED, etc. The table below presents the structure of the function's register content.

Table. 5.5.6 - 242. Register content.

Register	Description
Date and time	dd.mm.yyyy hh:mm:ss.mss
Event	Event name
L1/L2/L3 current	Phase currents on trigger time
Time to CLPUact	Time remaining before the function is active
CLPU active time	The time the function has been active before starting
Start-up time	Recorded starting time
Releasing time of CLPU	Reclaim time counter
Setting group in use	Setting group 1...8 active

5.5.7 Switch-on-to-fault (SOTF)

The switch-on-to-fault (SOTF) function is used for speeding up the tripping when the breaker is closed towards a fault or forgotten earthing to reduce the damage in the fault location. The function can be used to control protection functions, or it can be used to directly trip a breaker if any of the connected protection functions starts during the set SOTF time. The operation of the function is instant after the conditions are met and any one signal connected to the "*Function input*" input activates.

The function can be initiated by a digital input, or by a circuit breaker "Close" command connected to the "*SOTF activate input*" input. The duration of the SOTF-armed condition can be set by the "Release time for SOTF" setting parameter; it can be changed if the application so requires through setting group selection.

Figure. 5.5.7 - 204. Simplified function block diagram of the switch-on-to-fault function.

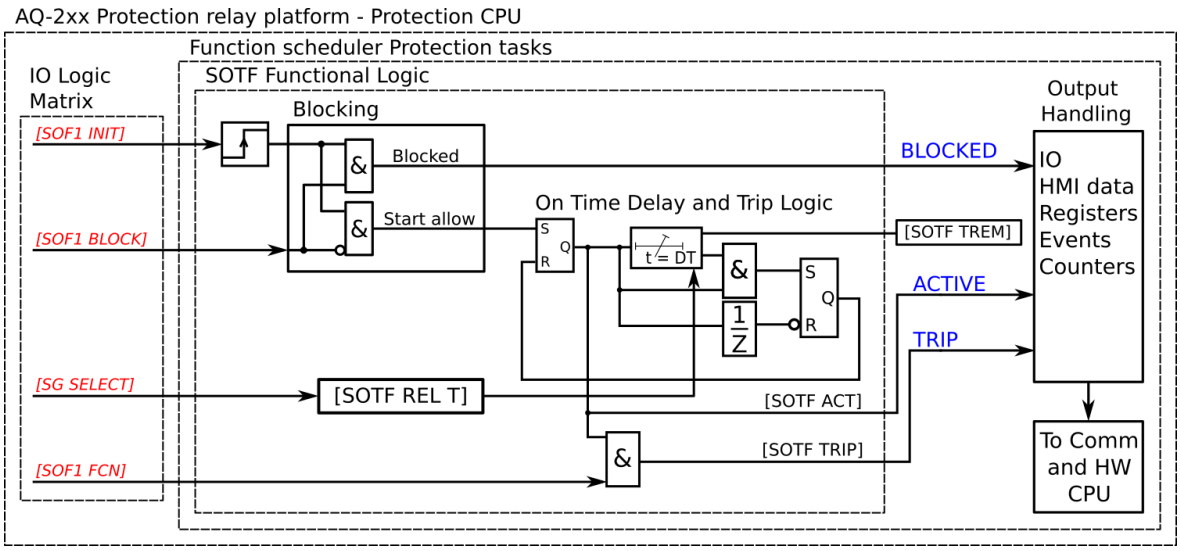

Input signals

The function block does not use analog measurement inputs. Instead, its operation is based entirely on binary signal statuses.

Table. 5.5.7 - 243. Input signals.

Input	Description
Activate input	The digital input or logic signal for the function to arm and start calculating the SOTF time. Any binary signal can be used to activate the function and start the calculation. The rising edge of the signal is considered as the start of the function.
Block input	The input for blocking the function. Any binary signal can be used to block the function from starting.
Function input	The function input activates the function's instant trip if applied when the function is calculating the SOTF time.

Settings

The switch-on-to-fault function has one setting and it determines how long the function remains active after it has been triggered. If the inputs receive any of the set signals during this time, the function's trip is activated.

Setting group selection controls the operating characteristics of the function, i.e. the user or user-defined logic can change function parameters while the function is running.

Table. 5.5.7 - 244. Settings of the function.

Name	Range	Default	Description
SOTF force status to	• Normal • Blocked • Active • Trip	Normal	Force the status of the function. Visible only when *Enable stage forcing* parameter is enabled in *General* menu.

© Arcteq Relays Ltd
IM00014

Name	Range	Default	Description
Release time for SOTF	0.000…1800.000s	1.000s	The time the function is active after triggering.

Read-only parameters

The function's *Info* page displays useful, real-time information on the state of the protection function. It is accessed either through the device's HMI display, or through the setting tool software when it is connected to the device and its Live Edit mode is active.

Table. 5.5.7 - 245. Information displayed by the function.

Name	Range	Description
SOTF condition	• Normal • Init • Active • Trip • Blocked	Displays status of the control function.

Function blocking

The function can be blocked by activating the BLOCK input. This prevents the function's active time from starting.

Events and registers

The switch-on-to-fault function (abbreviated "SOF" in event block names) generates events and registers from the status changes in the events listed below. The user can select which event messages are stored in the main event buffer: ON, OFF, or both. The events triggered by the function are recorded with a time stamp.

The function's outputs can be used for direct I/O controlling and user logic programming. The function also provides a resettable cumulative counter for the INIT, BLOCKED, ACTIVE and TRIP events.

Table. 5.5.7 - 246. Event messages.

Event block name	Event names
SOF1	SOTF Init ON/OFF
SOF1	SOTF Block ON/OFF
SOF1	SOTF Active ON/OFF
SOF1	SOTF Trip ON/OFF

The function registers its operation into the last twelve (12) time-stamped registers. The register of the function records the ON process data of ACTIVATED events. The table below presents the structure of the function's register content.

Table. 5.5.7 - 247. Register content.

Register	Description
Date and time	dd.mm.yyyy hh:mm:ss.mss
Event	Event name
Used SG	Setting group 1...8 active
SOTF remaining time	The time remaining of the set release time.
SOTF been active time	The time the function has been active.

5.5.8 Synchrocheck (ΔV/Δa/Δf; 25)

Checking the synchronization is important to ensure the safe closing of the circuit breaker between two systems. Closing the circuit breaker when the systems are not synchronized can cause several problems such as current surges which damage the interconnecting elements. The synchrocheck function has three stages: SYN1, SYN2 and SYN3. Their function and availability of these stages depend on which voltage channels are set to "SS" mode or not. Voltage measurement settings are located at *Measurements → Transformers → VT module*. When synchroswitching is used, the function automatically closes the breaker when both sides of the breaker are synchronized.

When only U3 or U4 voltage measurement channel has been set to "SS" mode:

- SYN1 – Supervises the synchronization condition between the channel set to "SS" mode and the selected system voltage (UL1, UL2, UL3, UL12, UL23 or UL31).
- SYN2 – Not active and not visible.
- SYN3 – Not active and not visible.

When both U3 and U4 have been set to "SS" mode:

- SYN1 – Supervises the synchronization condition between the U3 channel and the selected system voltage (UL12, UL23 or UL31).
- SYN2 – Supervises the synchronization condition between the U4 channel and the selected system voltage (UL12, UL23 or UL31).
- SYN3 – Supervises the synchronization condition between the channels U3 and U4.

The seven images below present three different example connections and four example applications of the synchrocheck function.

© Arcteq Relays Ltd
IM00014

Figure. 5.5.8 - 205. Example connection of the synchrocheck function (3LN+U4 mode, SYN1 in use, UL1 as reference voltage).

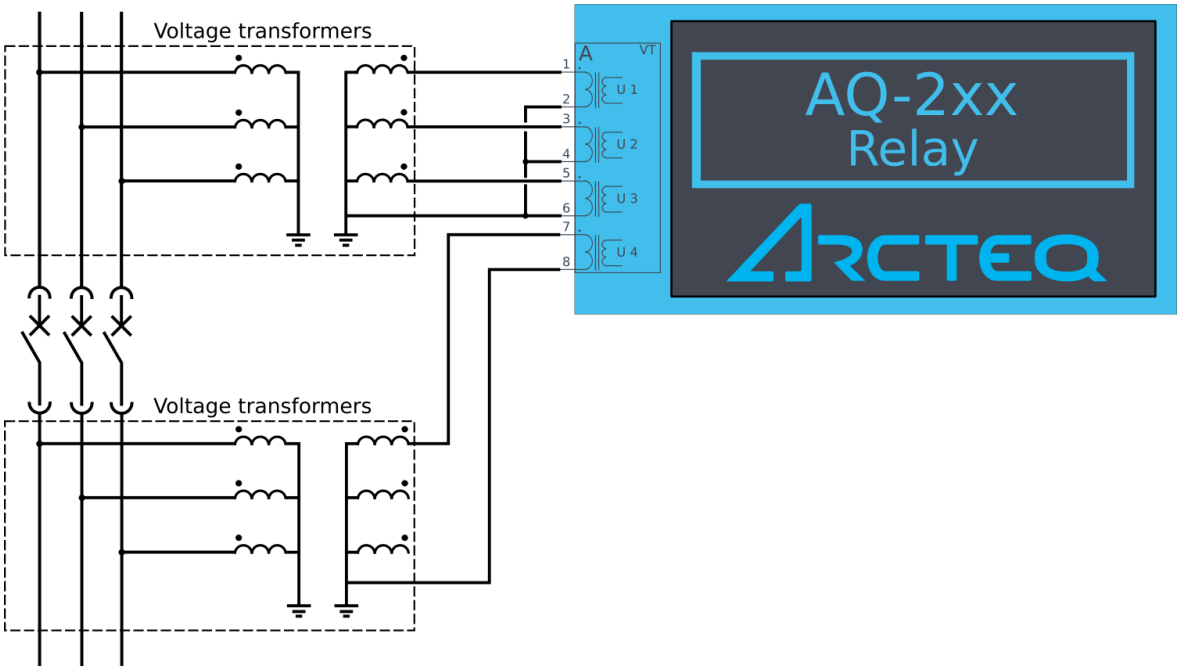

Figure. 5.5.8 - 206. Example connection of the synchrocheck function (2LL+U0+U4 mode, SYN1 in use, UL12 as reference voltage).

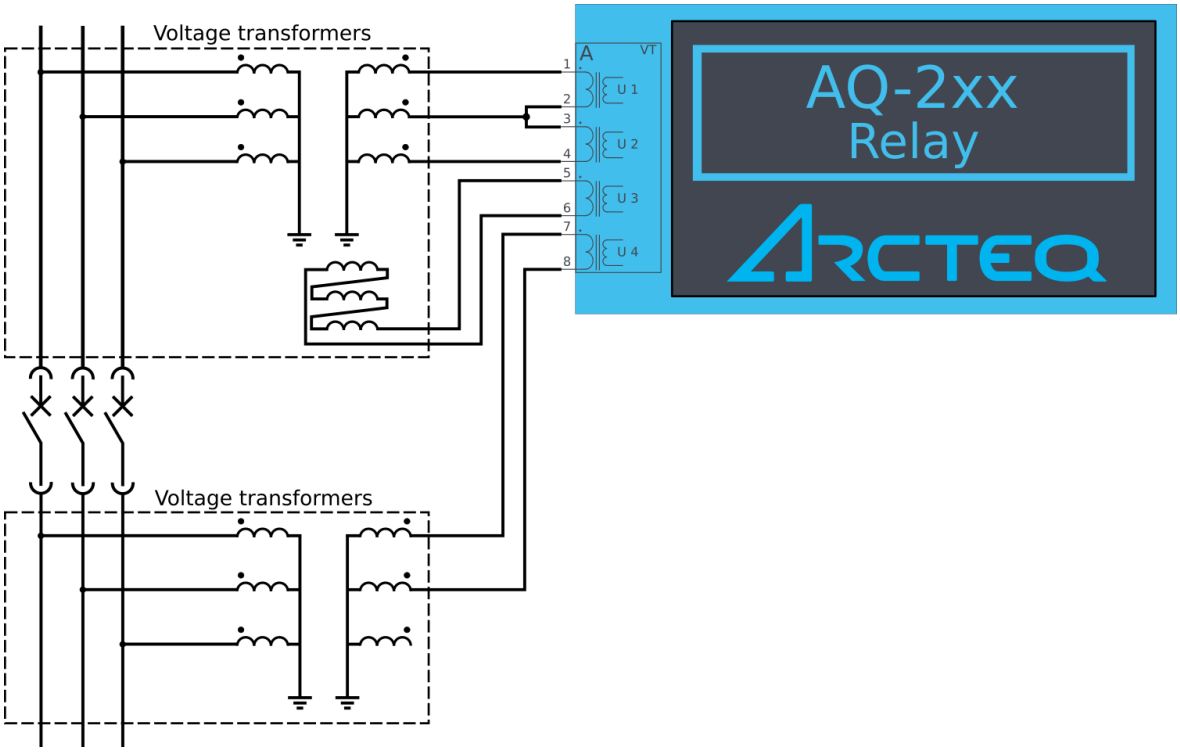

Figure. 5.5.8 - 207. Example connection of the synchrocheck function (2LL+U3+U4 mode, SYN3 in use, UL12 as reference voltage).

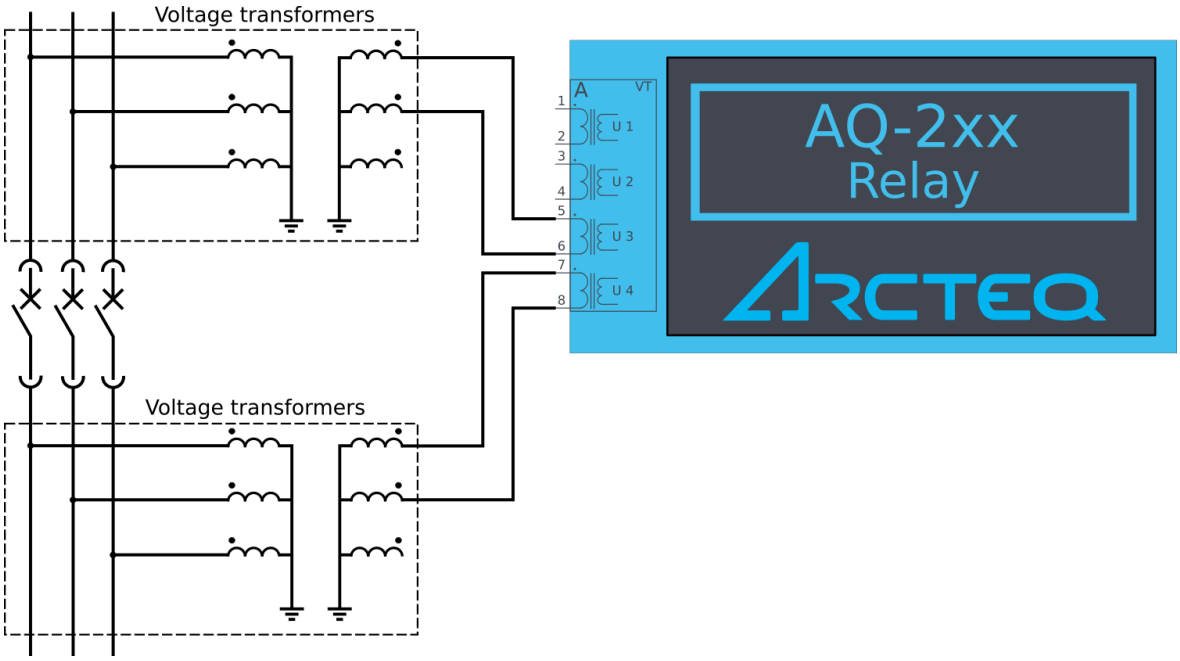

Figure. 5.5.8 - 208. Example application (synchrocheck over one breaker, with 3LL and 3LN VT connections).

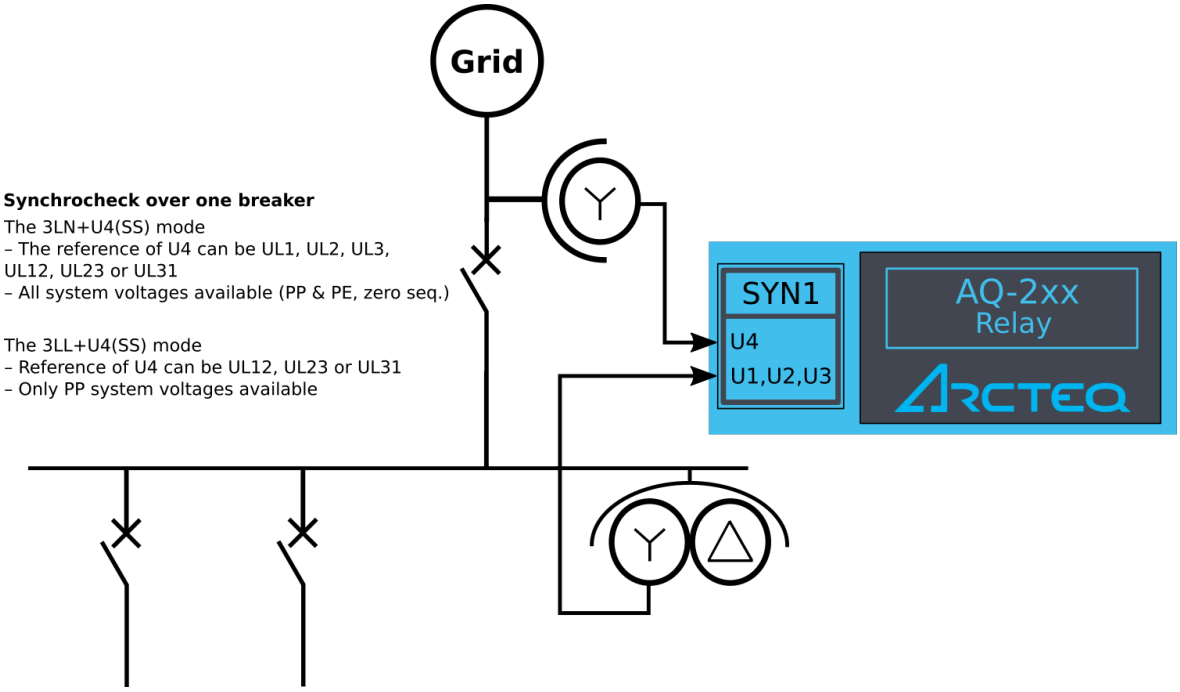

© Arcteq Relays Ltd
IM00014

Figure. 5.5.8 - 209. Example application (synchrocheck over one breaker, with 2LL VT connection).

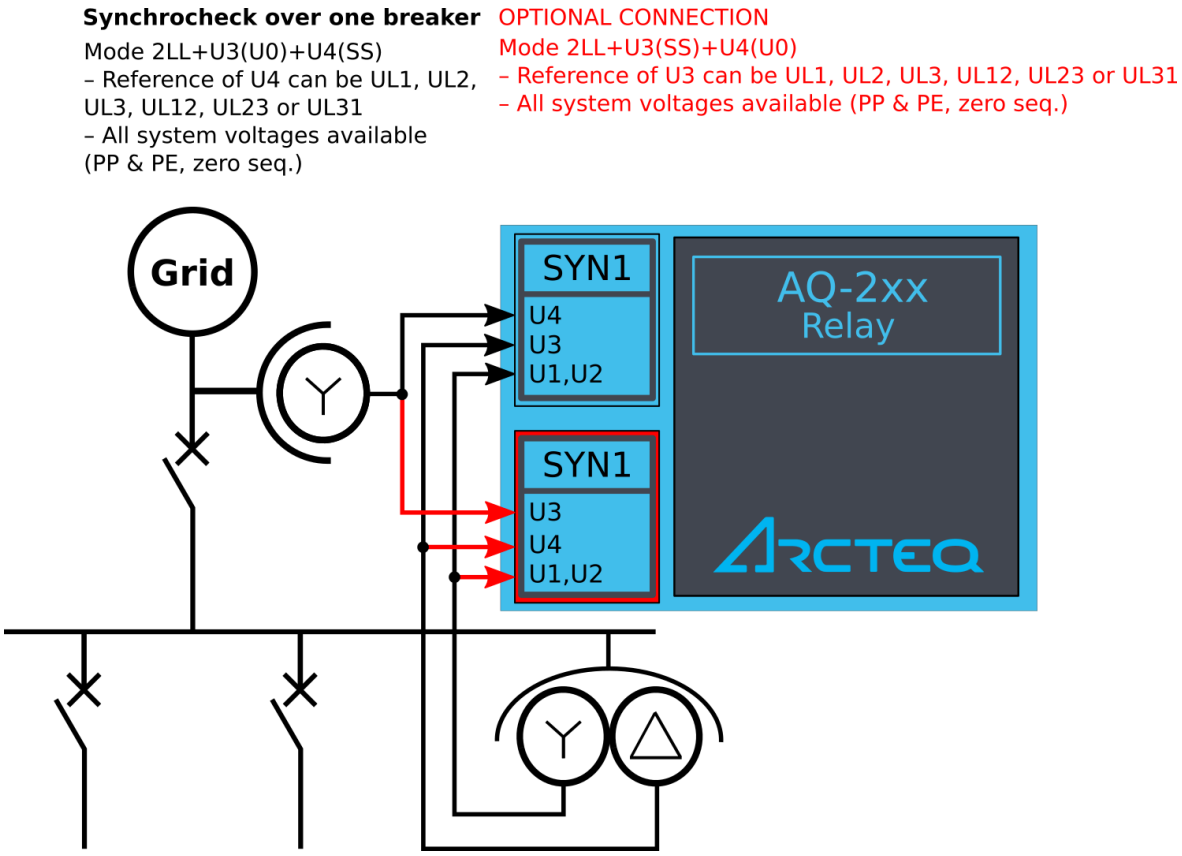

Figure. 5.5.8 - 210. Example application (synchrocheck over two breakers, with 2LL VT connection).

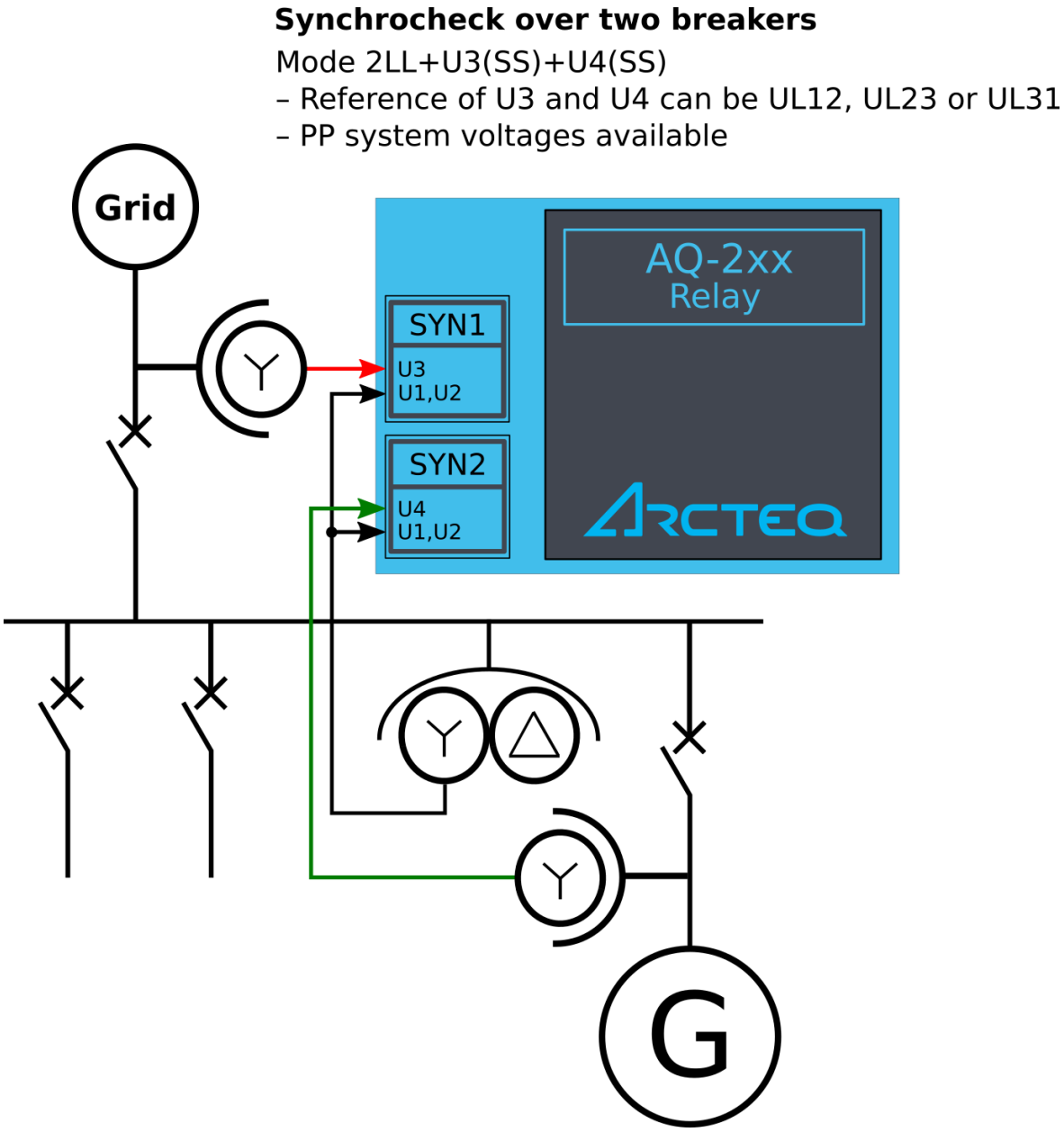

© Arcteq Relays Ltd
IM00014

Figure. 5.5.8 - 211. Example application (synchrocheck over three breakers, with 2LL+U3+U4 connection).

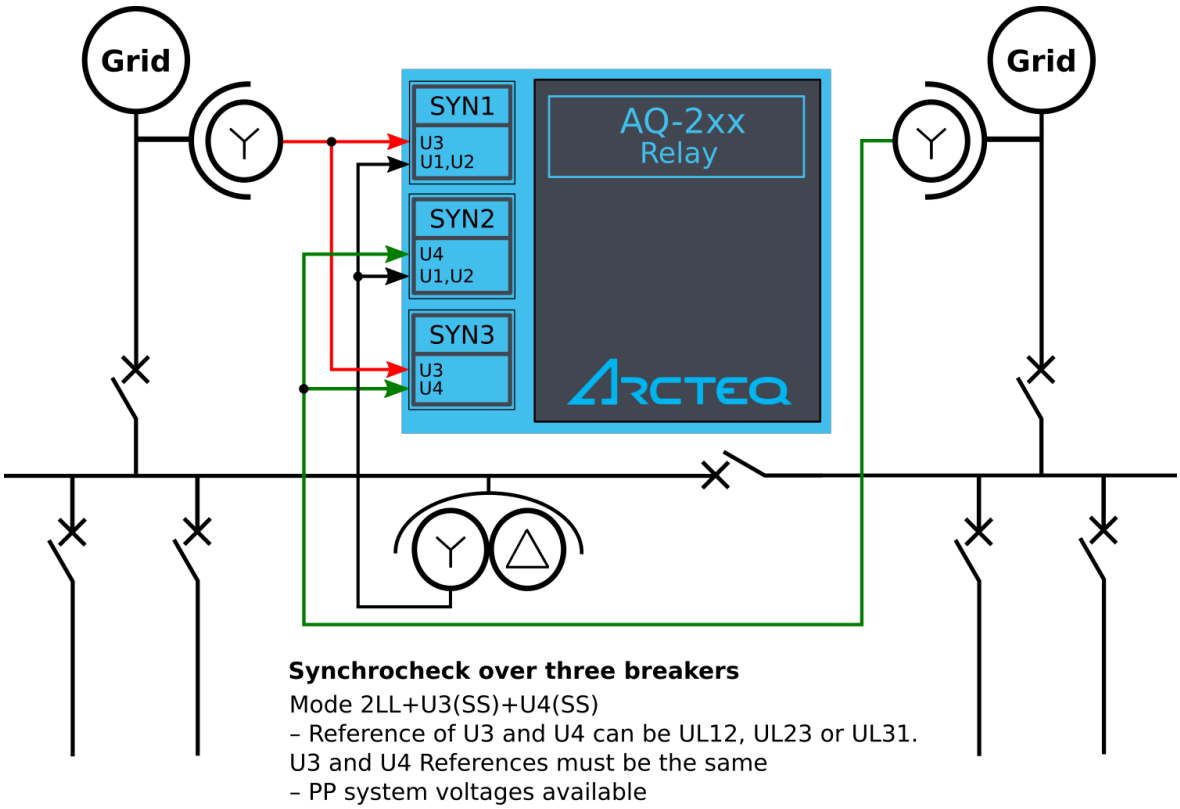

NOTICE!
When synchrocheck is used over three breakers, SYN1 and SYN2 must have the same reference voltage.

The following aspects of the compared voltages are used in synchorization:

- voltage magnitudes
- voltage frequencies
- voltage phase angles

The two systems are synchronized when these three aspects are matched. All three cannot, of course, ever be exactly the same so the function requires the user to set the maximum difference between the measured voltages.

Depending on how the measured voltage compares to the set *U live>* and *U dead<* parameters, either system can be in a "live" or a "dead" state. The parameter *SYNx U conditions* is used to determine the conditions (in addition to the three aspects) which are required for the systems to be considered synchronized.

The image below shows the different states the systems can be in.

Figure. 5.5.8 - 212. System states.

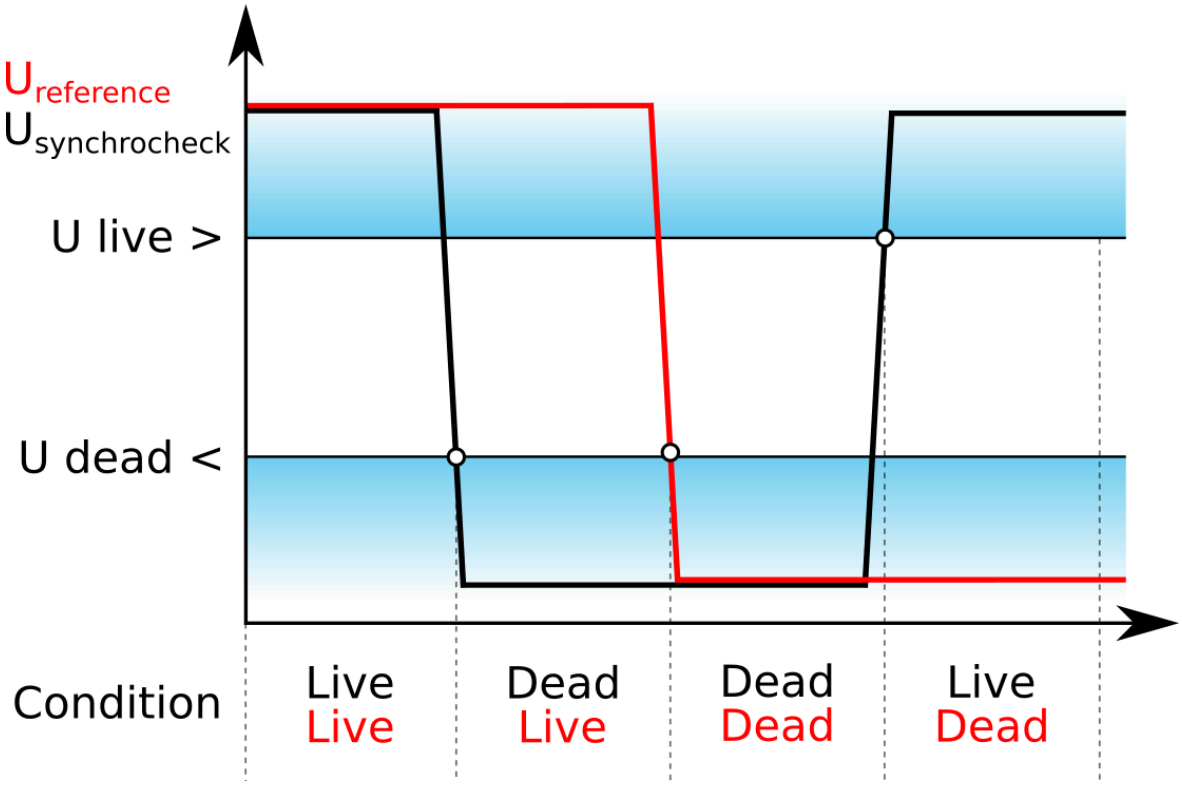

Figure. 5.5.8 - 213. Simplified function block diagram of the SYN1 and SYN2 function.

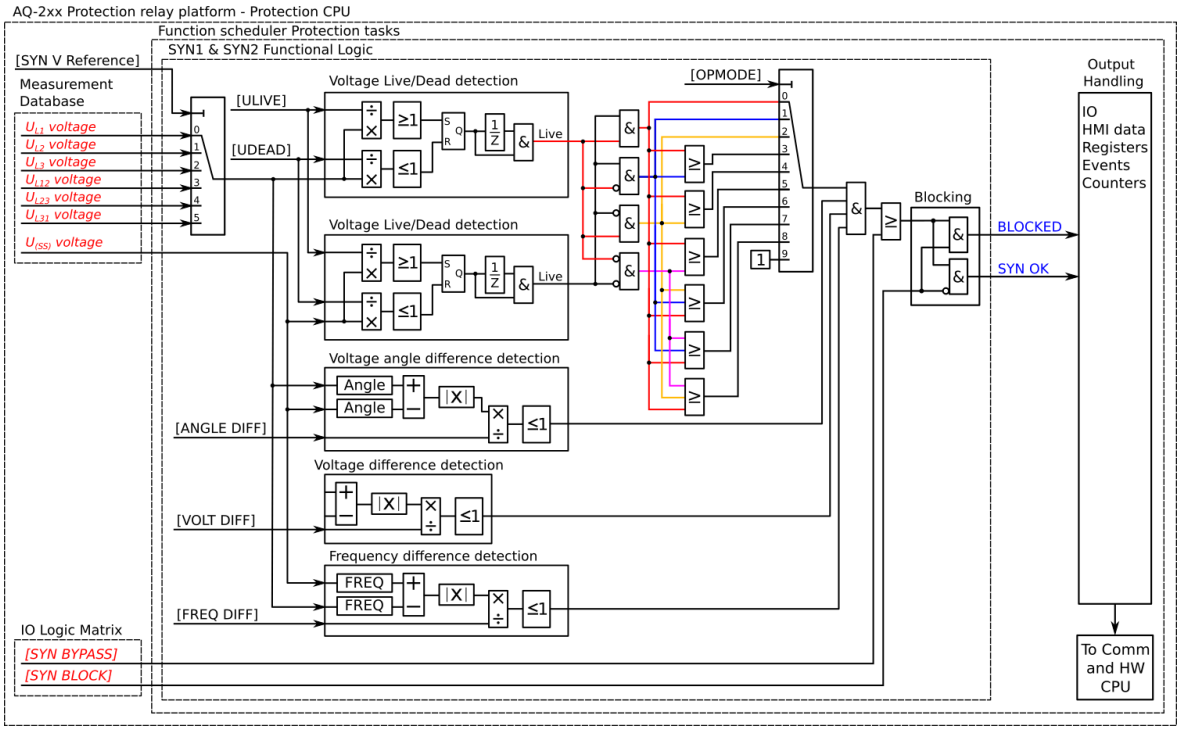

© Arcteq Relays Ltd
IM00014

Figure. 5.5.8 - 214. Simplified function block diagram of the SYN3 function.

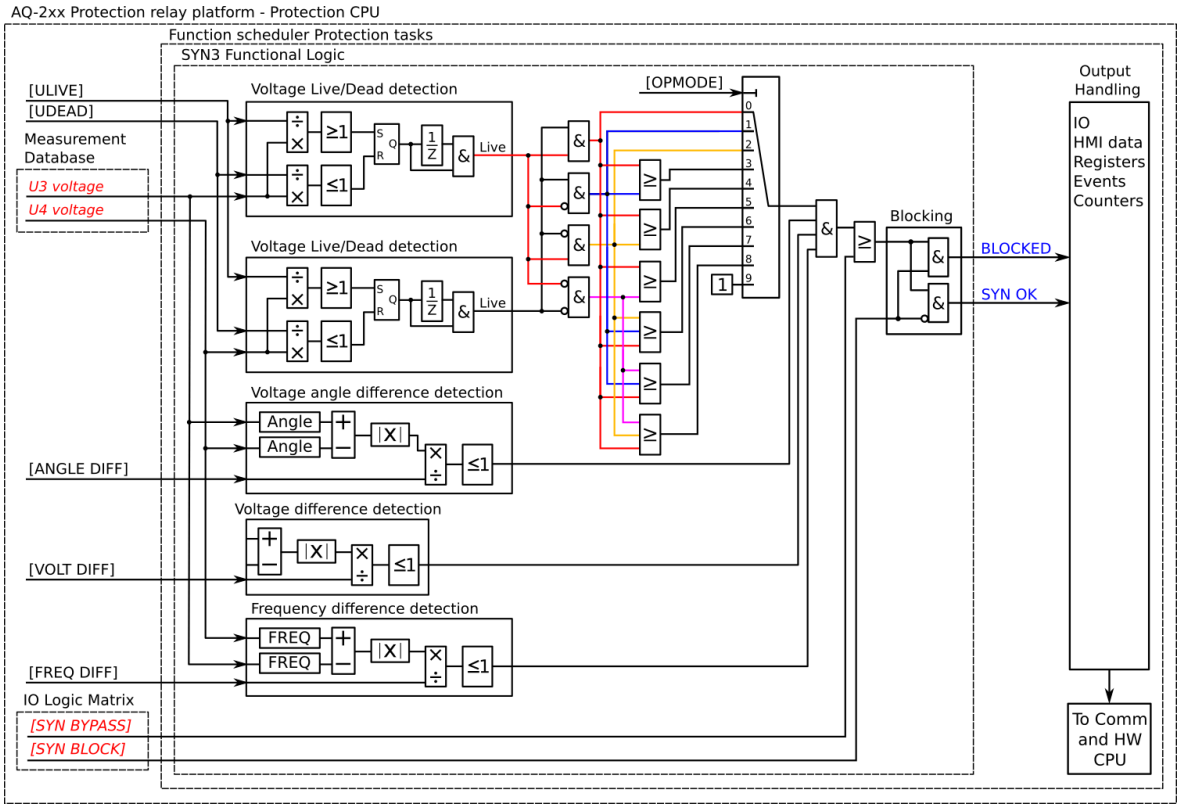

Measured input

The function block uses user selected voltage channels. The function monitors frequency, angle and fundamental frequency component value of the selected channels.

Table. 5.5.8 - 248. Measurement inputs of the synchrocheck function.

Signal	Description
U_1RMS	Fundamental frequency component of U_1/V voltage channel
U_2RMS	Fundamental frequency component of U_2/V voltage channel
U_3RMS	Fundamental frequency component of U_3/V voltage channel
U_4RMS	Fundamental frequency component of U_4/V voltage channel

Read-only parameters

The function's *Info* page displays useful, real-time information on the state of the protection function. It is accessed either through the device's HMI display, or through the setting tool software when it is connected to the device and its Live Edit mode is active.

Table. 5.5.8 - 249. Information displayed by the function.

Name	Range	Step	Description
SYN condition	• SYN1 Blocked • SYN1 Ok • SYN1 Bypass • SYN1 Vcond Ok • SYN1 Vdiff Ok • SYN1 Adiff Ok • SYN1 fdiff Ok	-	Displays status of the control function.
SYN volt status	• Dead Dead • Live Dead • Dead Live • Live Live • Undefined • Not monitored	-	Displays the voltage status of both sides.
SYN Mag diff	-120...120%Un	0.01%Un	Displays voltage difference between the two measured voltages.
SYN Ang diff	-360'...360deg	0.01deg	Displays angle difference between the two measured voltages.
SYN Freq diff	-75...75Hz	0.001Hz	Displays frequency difference between the two measured voltages.
SYN Switch status	• Still • Departing • Enclosing	-	Displays the synchroswitching status. This parameter is visible when "SYN Switching" parameter has been set to "Use SynSW".
Estimated BRK closing time	0...360s	0.005s	Estimated time left to breaker closing.
Networks rotating time	0...360s	0.005s	Estimated time how long it takes for the network to rotate fully.
Networks placement atm	-360...360deg	0.001deg	Networks placement in degrees.

Function blocking

The block signal is checked in the beginning of each program cycle. The blocking signal is received from the blocking matrix in the function's dedicated input. If the blocking signal is not activated when the synchronization is OK, a SYN OK signal is generated.

If the blocking signal is active when the SYN OK activates, a BLOCKED signal is generated and the function does not process the situation further. If the SYN OK function has been activated before the blocking signal, it resets.

© Arcteq Relays Ltd
IM00014

Setting parameters

NOTE! Before these settings can be accessed, a voltage channel (U3 or U4) must be set into the synchrocheck mode ("SS") in the voltage transformer settings (*Measurements → VT Module*).

The general settings can be found at the synchrocheck function's *INFO* tab, while the synchrocheck stage settings can be found in the *Settings* tab (*Control → Control functions → Synchrocheck*).

Table. 5.5.8 - 250. General settings.

Name	Range	Step	Default	Description
SYN(1,2,3) Status Force to	• Normal • SYN1 Blocked • SYN1 Ok • SYN2 Blocked • SYN2 Ok • SYN3 Blocked • SYN3 Ok	-	Normal	Force the status of the function. Visible only when *Enable stage forcing* parameter is enabled in *General* menu.
System voltages are measured on	• Bus, Line is reference • Line, Bus is reference	-	Bus, Line is reference	Defines which voltage is the reference when determining dead/live status of voltages.
Use SYNx	• No • Yes	-	No	Activated/de-activates the individual stages (SYN1, 2, and 3) of the synchrocheck function. Activating a stage reveals the parameter settings for the configuration.
SYNx Start check	• Always • On start	-	Always	Selects synchrocheck start behaviour. If "On start" is selected "SYNx START" input must be active for synchrochecking to begin. "SYNx START" input signal can be defined at *IO → Input control* menu. If "Always" is selected "SYNx START" input is not needed for synchrochecking to start.
SYN1 V Reference	• Not in use • UL12 • UL23 • UL31 • UL1 • UL2 • UL3	-	Not in use	Selects the reference voltage of the stage. Please note that the available references depend on the selected mode. All references available: - 3LN+U4(SS) - 2LL+U3(U0)+U4(SS) - 2LL+U3(SS)+U4(U0) Reference options 0...3 available: - 3LL+U4(SS) - 2LL+U3(Not in use)+U4(SS) - 2LL+U3(SS)+U4(Not in use)
SYN2 V Reference	• Not in use • UL12 • UL23 • UL31	-	Not in use	Selects the reference voltage of the stage. SYN2 is available when both U3 and U4 have been set to SS mode.
SYN3 V Reference	• Not in use • U3–U4	-	Not in use	Enables and disables the SYN3 stage. Operable in the 2LL+U3+U4 mode, with references UL12, UL23 and UL31 can be connected to the channels.

Name	Range	Step	Default	Description
SYNx Switching	• Not in use • Use SynSW	-	Not in use	Disables or enables synchroswitching. Synchroswitching is available only for SYN1. When synchroswitching is used, the function automatically closes the breaker when both sides of the breaker are synchronized. This setting is only visible when "Use SYN1" is activated.
SYNx Switch bk time	0.000...1800.000s	0.005s	0.05s	Estimated time between a close command given to a breaker and the breaker entering the closed state. This setting is used to time the closing of the breaker so that both sides are as synchronized as possible when the breaker is actually closed. This setting is only visible when "SYN1 switching" is activated.
SYNx Switching object	• Object 1 • Object 2 • Object 3 • Object 4 • Object 5	-	Object 1	When synchroswitching is enabled, this parameter defines which object receives the breaker's closing command. This setting is only visible when "SYNx Switching" is activated.
Estimated BRK closing time	0.000…360.000s	0.005s	-	Displays the estimated time until networks are synchronized.
Networks rotating time	0.000…360.000s	0.005s	-	Displays the time it takes for both sides of the network to fully rotate.
Networks placement atm	-360.000…360.000deg	0.001deg	-	Indicates the angle difference between the two sides of the breaker at the moment.

Setting group selection controls the operating characteristics of the function, i.e. the user or user-defined logic can change function parameters while the function is running.

Table. 5.5.8 - 251. Synchrocheck stage settings.

Name	Range	Step	Default	Description
SYNx U conditions	• LL only • LD only • DL only • LL & LD • LL & DL • LL & DD • LL & LD & DL • LL & LD & DD • LL & DL & DD • Bypass	-	LL only	Determines the allowed states of the supervised systems. L = Live D = Dead
SYNx U live >	0.10…100.00%Un	0.01%Un	20%Un	The voltage limit of the live state.
SYNx U dead <	0.00…100.00%Un	0.01%Un	20%Un	The voltage limit of the dead state. Not in use when set to 0%Un

© Arcteq Relays Ltd
IM00014

Name	Range	Step	Default	Description
SYNx U diff <	2.00…50.00%Un	0.01%Un	2.00%Un	The maximum allowed voltage difference between the systems.
SYNx angle diff <	3.00…90.00deg	0.01deg	3deg	The maximum allowed angle difference between the systems.
SYNx freq diff <	0.05…0.50Hz	0.01Hz	0.1Hz	The maximum allowed frequency difference between the systems.

Events and registers

The synchrocheck function (abbreviated "SYN" in event block names) generates events and registers from the status changes in the events listed below. The user can select which event messages are stored in the main event buffer: ON, OFF, or both. The events triggered by the function are recorded with a time stamp.

The function's outputs can be used for direct I/O controlling and user logic programming.

The function offers three (3) independent stages; the events are segregated for each stage operation.

Table. 5.5.8 - 252. Event messages.

Event block name	Event names
SYN1	SYN1 Blocked ON/OFF
SYN1	SYN1 Ok ON/OFF
SYN1	SYN1 Bypass ON/OFF
SYN1	SYN1 Volt condition OK
SYN1	SYN1 Volt cond not match
SYN1	SYN1 Volt diff Ok
SYN1	SYN1 Volt diff out of setting
SYN1	SYN1 Angle diff Ok
SYN1	SYN1 Angle diff out of setting
SYN1	SYN1 Frequency diff Ok
SYN1	SYN1 Frequency diff out of setting
SYNX1	SYN1 Voltage difference Ok ON/OFF
SYNX1	SYN1 Angle difference Ok ON/OFF
SYNX1	SYN1 Frequency difference Ok ON/OFF
SYNX1	SYN1 Live Live Condition ON/OFF
SYNX1	SYN1 Live Dead Condition ON/OFF
SYNX1	SYN1 Dead Live Condition ON/OFF

Event block name	Event names
SYNX1	SYN1 Dead Dead Condition ON/OFF
SYNX1	SYN1 Voltage Difference too high Vbus > Vline ON/OFF
SYNX1	SYN1 Voltage Difference too high Vline > Vbus ON/OFF
SYNX1	SYN1 Frequency Difference too high fbus > fline ON/OFF
SYNX1	SYN1 Frequency Difference too high fline > fbus ON/OFF
SYNX1	SYN1 Angle Difference too high a bus leads a line ON/OFF
SYNX1	SYN1 Angle Difference too high a line leads a bus ON/OFF
SYNX1	SYN1 Bus voltage Live ON/OFF
SYNX1	SYN1 Bus voltage Dead ON/OFF
SYNX1	SYN1 Line voltage Live ON/OFF
SYNX1	SYN1 Line voltage Dead ON/OFF

The function registers its operation into the last twelve (12) time-stamped registers. The table below presents the structure of the function's register content.

Table. 5.5.8 - 253. Register content.

Name	Range
Date and time	dd.mm.yyyy hh:mm:ss.mss
Event	Event name
SYNx Ref1 voltage	The reference voltage of the selected stage.
SYNx Ref2 voltage	The reference voltage of the selected stage.
SYNx Volt Cond	The voltage condition of the selected stage.
SYNx Volt status	The voltage status of the selected stage.
SYNx Vdiff	The voltage difference of the selected stage.
SYNx Vdiff cond	The set condition of the voltage difference of the selected stage.
SYNx Adiff	The angle difference of the selected stage.
SYNx Adiff cond	The set condition of the angle difference of the selected stage.
SYNx fdiff	The frequency difference of the selected stage.
SYNx fdiff cond	The set condition of the frequency difference of the selected stage.
Setting group in use	Setting group 1...8 active.

© Arcteq Relays Ltd
IM00014

5.5.9 Milliampere output control

The milliamp current loop is the prevailing process control signal in many industries. It is an ideal method of transferring process information because a current does not change as it travels from a transmitter to a receiver. It is also much more simple and cost-effective.

The benefits of 4...20 mA loops:

- the dominant standard in many industries
- the simplest option to connect and configure
- uses less wiring and connections than other signals, thus greatly reducing initial setup costs
- good for travelling long distances, as current does not degrade over long connections like voltage does
- less sensitive to background electrical noise
- detects a fault in the system incredibly easily since 4 mA is equal to 0 % output.

Milliampere (mA) outputs

AQ-200 series supports up to two (2) independent mA option cards. Each card has four (4) mA output channels and one (1) mA input channel. If the device has an mA option card, enable mA outputs at *Control → Device IO → mA outputs*. The outputs are activated in groups of two: channels 1 and 2 are activated together, as are channels 3 and 4.

Table. 5.5.9 - 254. Main settings (output channels).

Name		Range	Default	Description
mA option card 1	Enable mA output channels 1 and 2	• Disabled • Enabled	Disabled	Enables and disables the outputs of the mA output card 1.
	Enable mA output channels 3 and 4			
mA option card 2	Enable mA output channels 5 and 6	• Disabled • Enabled	Disabled	Enables and disables the outputs of the mA output card 2.
	Enable mA output channels 7 and 8			

Table. 5.5.9 - 255. Settings for mA output channels.

Name	Range	Step	Default	Description
Enable mA output channel	• Disabled • Enabled	-	Disabled	Enables and disables the selected mA output channel. If the channel is disabled, the channel settings are hidden.
Magnitude selection for mA output channel	• Currents • Voltages • Powers • Impedance and admittance • Other	-	Currents	Defines the measurement category that is used for mA output control.

Name	Range	Step	Default	Description
Magnitude of mA output channel	(dependent on the measurement category selection)	-	(dependent on the measurement category selection)	Defines the measurement magnitude used for mA output control. The available measurements depend on the selection of the "Magnitude selection for mA output channel" parameter.
Input value 1	$-10^7 \ldots 10^7$	0.001	0	The first input point in the mA output control curve.
Scaled mA output value 1	0.0000…24.0000mA	0.0001mA	0mA	The mA output value when the measured value is equal to or less than Input value 1.
Input value 2	$-10^7 \ldots 10^7$	0.001	1	The second input point in the mA output control curve.
Scaled mA output value 2	0.0000…24.0000mA	0.0001mA	0mA	The mA output value when the measured value is equal to or greater than Input value 2.

Figure. 5.5.9 - 215. Example of the effects of mA output channel settings.

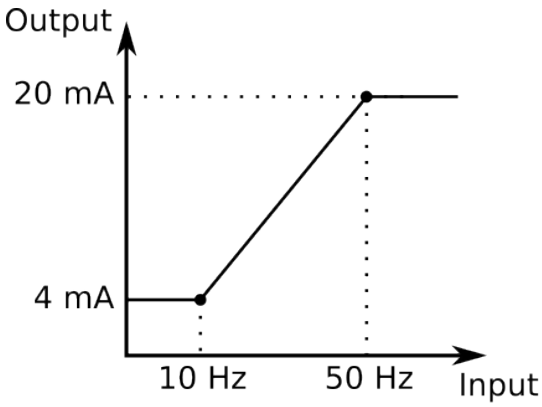

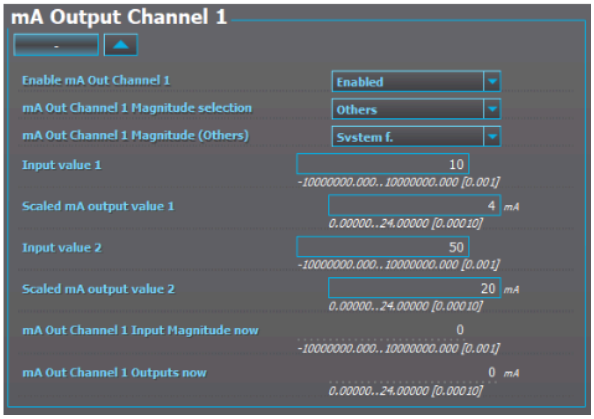

Table. 5.5.9 - 256. Hardware indications.

Name	Range	Description
Hardware in mA output channels 1...4	• None • Slot A • Slot B • Slot C • Slot D • Slot E • Slot F	Indicates the option card slot where the mA output card is located.
Hardware in mA output channels 5...8		

© Arcteq Relays Ltd

Table. 5.5.9 - 257. Measurement values reported by mA output cards.

Name	Range	Step	Description
mA in Channel 1	0.0000…24.0000mA	0.0001mA	Displays the measured mA value of the selected input channel.
mA in Channel 2			
mA Out Channel Input Magnitude now	$-10^7 \ldots 10^7$	0.001	Displays the input value of the selected mA output channel at that moment.
mA Out Channel Outputs now	0.0000…24.0000mA	0.0001mA	Displays the output value of the selected mA output channel at that moment.

5.5.10 Vector jump (Δφ; 78)

Distribution systems may include different kinds of distributed power generation sources, such as wind farms and diesel or fuel generators. When a fault occurs in the distribution system, it is usually detected and isolated by the protection system closest to the faulty point, resulting in the electrical power system shutting dow either partially or completely. The remaining distributed generators try to deliver the power to the part of the distribution system that has been disconnected from the grid, and usually an overload condition can be expected. Under such overload conditions, it is normal to have a drop in voltage and frequency. This overload results in the final system disconnection from the islanding generator(s). The disconnection depends greatly on the ratio between the power generation and the demand of the islanded system. When any power is supplied to a load only from distributed generators, (due to the opening of the main switch), the situation is called an isolated island operation or an islanded operation of the electrical distribution network.

The vector jump control function is suitable to detect most islanding situations and to switch off the mains breaker in order to let the generator only supply loads according to their rated power value. Therefore, an overload does not cause any mechanical stress to the generator unit(s). The vector jump function should be located either on the mains side of the operated breaker or on the islanding generator side.

The vector jump function is used for instant tripping and has only one operating stage. The function has an algorithm which follows the samples of chosen measured voltages (64 samples/cycle). The reference voltage used can be all or any of the phase-to-phase or phase-to-neutral voltages.

Figure. 5.5.10 - 216. Simplified function block diagram of the Δφ function.

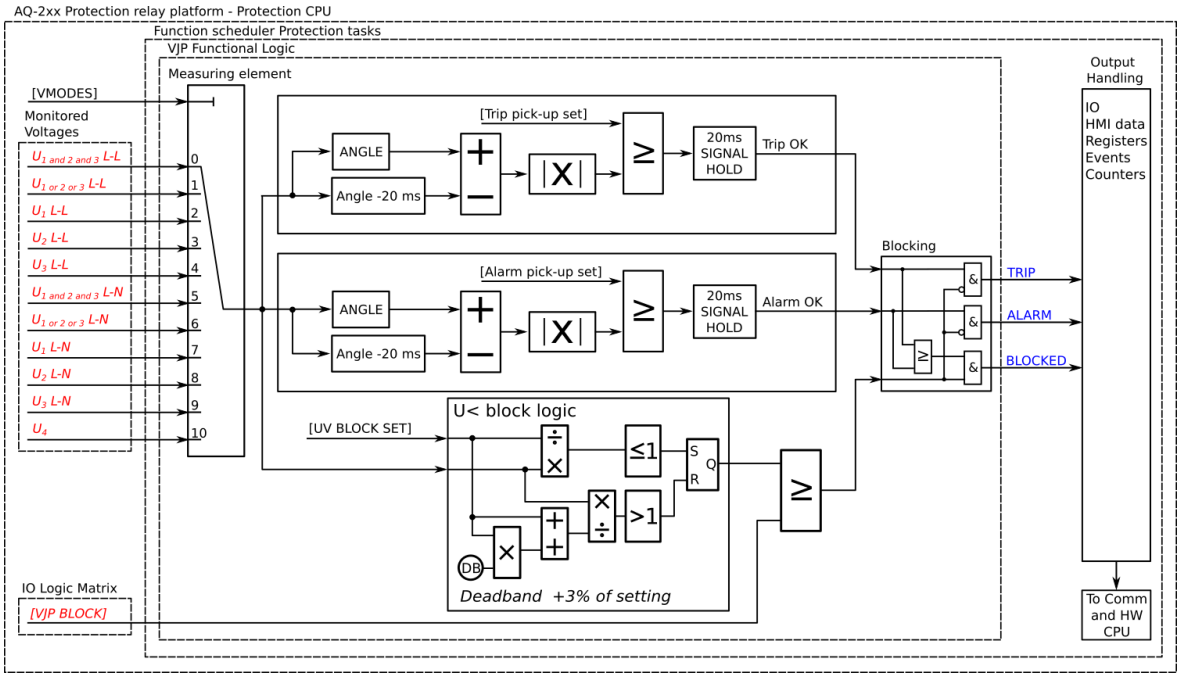

Measured input

The function block uses phase-to-phase or phase-to-neutral voltages and always uses complex measurement from samples.

Table. 5.5.10 - 258. Measurement inputs of the vector jump function.

Signal	Description
U_1 CMPLX	The complex vector of U_1/V voltage channel
U_2 CMPLX	The complex vector of U_2/V voltage channel
U_3 CMPLX	The complex vector of U_3/V voltage channel
U_4 CMPLX	The complex vector of U_4/V voltage channel

Pick-up settings

Setting group selection controls the operating characteristics of the function, i.e. the user or user-defined logic can change function parameters while the function is running.

When a fault appears in the power system and some areas are disconnected, normally the remaining generators connected to the network must supply the area disconnected from the utility side supply. This results in an instantaneous demand of power that the generators must tackle. The excitation and the mechanical systems cannot answer such a huge demand of power quickly even if there were enough reserve power. The worst of the situation is received by the rotors of the generator units: they suffer a torsion torque that can even break the rotor and cause subsequent damage not only for the generator but for the entire power plant too.

© Arcteq Relays Ltd
IM00014

Figure. 5.5.10 - 217. Generator islanding.

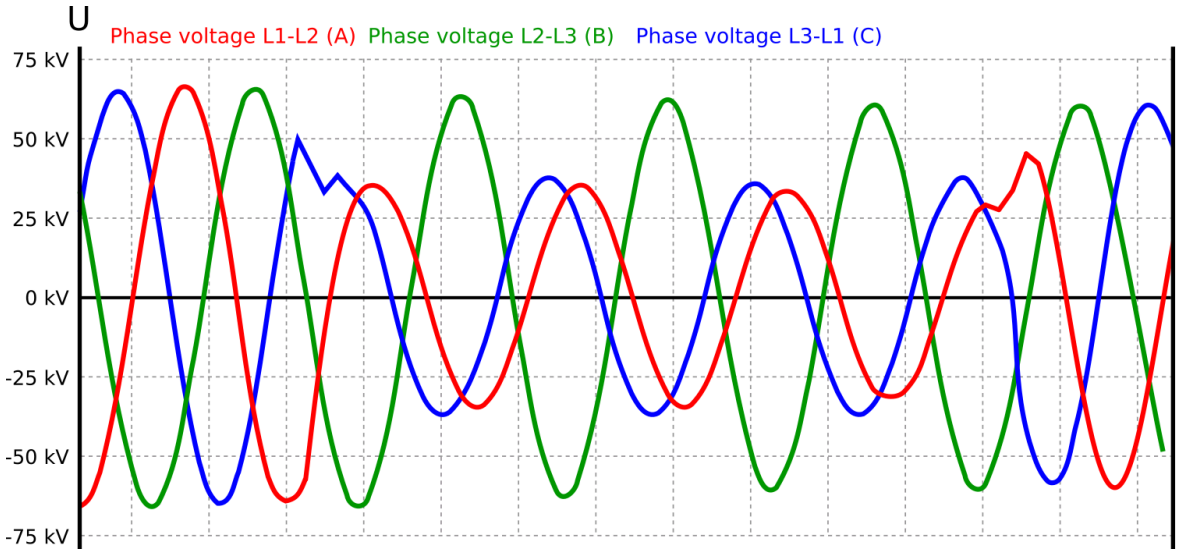

As can be seen in the example above, only phase-to-phase voltages L1-L2 and L3-L1 have been reduced, while voltage L2-L3 remains the same. This means that the problem occured in phase L1 of the network. The voltage level is not reduced to zero, nor is the voltage in any phase is totally lost. The phases without the fault condition remain normal with the same value. On the other hand, the frequency can sag as can be seen in the figure above.

The *Δα* setting parameter controls the pick-up of the vector jump function. This defines the minimum allowed rapid measured voltage angle change before action from the function. The function constantly calculates the ratio between the $\Delta\alpha_{set}$ and the measured magnitude ($\Delta\alpha_m$) for each of the selected voltages. The function's stage trip signal lasts for 20 ms and automatically resets after that time has passed. The setting value is common for all measured amplitudes.

Figure. 5.5.10 - 218. Vector jump from the function's point of view.

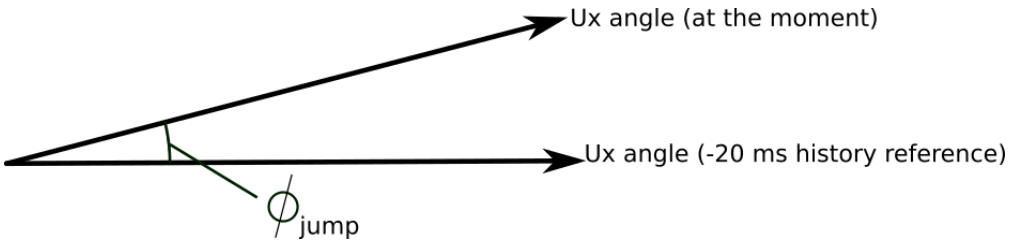

The following general settings define the general behavior of the function. These settings are static i.e. it is not possible to change them by editing the setting group.

Table. 5.5.10 - 259. General settings of the function.

Name	Range	Default	Description
Δα force status to	• Normal • Blocked • Trip • Alarm	Normal	Force the status of the function. Visible only when *Enable stage forcing* parameter is enabled in *General* menu.
Available stages	• Trip • Trip and alarm	Trip	Defines if alarm is included with trip or not.

Name	Range	Default	Description
Monitored voltages	• System all P-P Voltages • System any P-P Voltage • System L12 Voltage • System L23 Voltage • System L31 Voltage • System all P-E voltages • System any P-E voltage • System L1 Voltage • System L2 Voltage • System L3 Voltage • U4 Voltage	System any P-P Voltage	Defines the monitored voltage channel(s)

Table. 5.5.10 - 260. Pick-up settings.

Name	Range	Step	Default	Description
Pick-up setting Δα (lead or lag) Trip	0.05…30.00°	0.01°	5°	Pick-up setting for trip signal
Pick-up setting Δα (lead or lag) Alarm	0.05…30.00°	0.01°	5°	Pick-up setting for alarm signal
Undervoltage block limit % < Un	0.01…100.00%U_n	0.01%U_n	95%U_n	Block setting. When measured voltage is below this setting the function is blocked.

Read-only parameters

The function's *Info* page displays useful, real-time information on the state of the protection function. It is accessed either through the device's HMI display, or through the setting tool software when it is connected to the device and its Live Edit mode is active.

Table. 5.5.10 - 261. Information displayed by the function.

Name	Range	Step	Description
Δα > condition	• Normal • Blocked • Trip • Alarm	-	Displays status of the protection function.

© Arcteq Relays Ltd
IM00014

Name	Range	Step	Description
Voltage meas selected	• Selection Ok • Selection not available	-	Displays validity of the voltage channel(s) selected in "Monitored voltages" parameter.
Δα > U1 Angle difference	-360...360deg	0.01deg	Displays the angle difference between present time and 20 ms ago.
Δα > U2 Angle difference			
Δα > U3 Angle difference			
Δα > U1meas/set	-360...360p.u.	0.01p.u.	Displays the ratio between the measured voltage and undervoltage block limit setting.
Δα > U2meas/set			
Δα > U3meas/set			

Function blocking

The blocking signal is evaluated at the start of each program cycle. The blocking signals are connected to the function's dedicated input, which can be configured in the *IO → Blocking Input Control* tab of the function.

- When the pick-up element activates and the blocking signal is not active, a ALARM or TRIP signal is generated, and the function starts or continues with the trip time countdown.
- When the pick-up element activates and the blocking signal is active, a BLOCKED signal is generated, and the function does not process the event further.
- When an ALARM or TRIP signal is already active and the blocking input signal becomes active, the signal is reset and BLOCKED signal is generated. The release time characteristics are then processed in the same way as when the pick-up signal is reset.

The blocking signal needs to reach the device minimum of 5 ms before the set operating delay has passed in order for the blocking to activate in time.

Events and registers

The vector jump function (abbreviated "VJP" in event block names) generates events and registers from the status changes in the events listed below. The user can select which event messages are stored in the main event buffer: ON, OFF, or both. The events triggered by the function are recorded with a time stamp.

The function's outputs can be used for direct I/O controlling and user logic programming. The function also provides a resettable cumulative counter for the ALARM, TRIP and BLOCKED events.

Table. 5.5.10 - 262. Event messages.

Event block name	Event names
VJP1	Block ON/OFF
VJP1	Trip ON/OFF
VJP1	Alarm ON/OFF

The function registers its operation into the last twelve (12) time-stamped registers. The register of the function records the ON event process data for ALARM, TRIP or BLOCKED. The table below presents the structure of the function's register content.

Table. 5.5.10 - 263. Register content.

Register	Description
Date and time	dd.mm.yyyy hh:mm:ss.mss
Event	Event name
Fault type	L1(2), L2(3), L3(1) and U4
Trip Δα meas / dataset	Trip angle difference
Alarm Δα meas / dataset	Alarm angle difference
Setting group in use	Setting group 1...8 active

5.5.11 Programmable control switch

The programmable control switch is a control function that controls its binary output signal. This output signal can be controlled locally from the device's mimic or remotely from the RTU. The main purpose of programmable control switches is to block or enable function and to change function properties by changing the setting group. However, this binary signal can also be used for any number of other purposes, just like all other binary signals. Once a programmable control switch has been activated or disabled, it remains in that state until given a new command to switch to the opposite state (see the image below). The switch cannot be controlled by an auxiliary input, such as digital inputs or logic signals; it can only be controlled locally (mimic) or remotely (RTU).

Figure. 5.5.11 - 219. When a PCS has been controlled "ON" or "OFF", the PCS will keep its state.

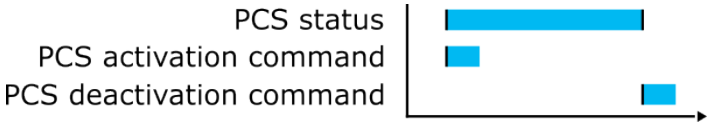

Settings.

These settings can be accessed at *Control → Device I/O → Programmable control switch*.

Table. 5.5.11 - 264. Settings.

Name	Range	Default	Description
Switch name	-	Switchx	The user-settable name of the selected switch. The name can be up to 32 characters long.
Access level for Mimic control	• User • Operator • Configurator • Super user	Configurator	Determines which access level is required to be able to control the programmable control switch via the Mimic.

© Arcteq Relays Ltd

Events

The programmable control switch function (abbreviated "PCS" in event block names) generates events from the status changes in the events listed below. The user can select which event messages are stored in the main event buffer: ON, OFF, or both. The events triggered by the function are recorded with a time stamp. The function offers five (5) independent switches. The function's output signals can be used for direct I/O controlling and user logic programming.

Table. 5.5.11 - 265. Event messages.

Event block name	Event names
PCS	Switch 1 ON/OFF
PCS	Switch 2 ON/OFF
PCS	Switch 3 ON/OFF
PCS	Switch 4 ON/OFF
PCS	Switch 5 ON/OFF

5.5.12 Analog input scaling curves

Sometimes when measuring with RTD inputs, milliampere inputs and digital inputs the measurement might be inaccurate because the signal coming from the source is inaccurate. One common example of this is tap changer location indication signal not changing linearly from step to step. If the output difference between the steps are not equal to each other, measuring the incoming signal accurately is not enough. "Analog input scaling curves" menu can be used to take these inaccuracies into account.

Analog input scaling curve settings can be found at *Measurement → AI(mA, DI volt) scaling* menu.

Currently following measurements can be scaled with analog input scaling curves:

- RTD inputs and mA inputs in "RTD & mA input" option cards
- mA inputs in "4x mA output & 1x mA input" option cards
- mA input in "4x mA input & 1x mA output" option cards
- Digital input voltages

Table. 5.5.12 - 266. Main settings (input channel).

Name	Range	Step	Default	Description
Analog input scaling	• Disabled • Activated	-	Disabled	Enables and disables the input.
Scaling curve 1...10	• Disabled • Activated	-	Disabled	Enables and disables the scaling curve and the input measurement.

Name	Range	Step	Default	Description
Curve 1...10 input signal select	• S7 mA Input • S8 mA Input • S15 mA Input • S16 mA Input • DI1...DI20 Voltage • RTD S1...S16 Resistance • mA In 1 (I card 1) • mA In 2 (I card 2) • mA In 1 (T card 1) • mA In 2 (T card 1) • mA In 3 (T card 1) • mA In 4 (T card 1) • mA In 1 (T card 2) • mA In 2 (T card 2) • mA In 3 (T card 2) • mA In 4 (T card 2)	-	S7 mA Input	Defines the measurement used by scaling curve.
Curve 1...10 input signal filtering	• No • Yes	-	No	Enables calculation of the average of received signal.
Curve 1...10 input signal filter time constant	0.005...3800.000 s	0.005 s	1 s	Time constant for input signal filtering. This parameter is visible when "Curve 1...4 input signal filtering" has been set to "Yes".
Curve 1...10 input signal out of range set	• No • Yes	-	No	Enables out of range signals. If input signal is out of minimum and maximum limits, "ASC1...4 input out of range" signal is activated.
Curve1...10 input minimum	-1 000 000.00...1 000 000.00	0.00001	0	Defines the minimum input of the curve. If input is below the set limit, "ASC1...4 input out of range" is activated.
Curve 1...10 input	-1 000 000.00...1 000 000.00	0.00001	-	Displays the input measurement received by the curve.
Curve1...10 input maximum	-1 000 000.00...1 000 000.00	0.00001	0	Defines the maximum input of the curve. If input is above the set limit, "ASC1...4 input out of range" is activated.
Curve1...10 output	-1 000 000.00...1 000 000.00	0.00001	-	Displays the output of the curve.

© Arcteq Relays Ltd

The input signal filtering parameter calculates the average of received signals according to the set time constant. This is why rapid changes and disturbances (such as fast spikes) are smothered. The Nyquist rate states that the filter time constant must be at least double the period time of the disturbance process signal. For example, the value for the filter time constant is 2 seconds for a 1 second period time of a disturbance oscillation.

$$H(s) = \frac{Wc}{S+Wc} = \frac{1}{1+s/Wc}$$

When the curve signal is out of range, it activates the "ASC1...10 input out of range" signal, which can be used inside logic or with other functions of the device. The signal can be assigned directly to an output relay or to an LED in the I/O matrix. The "Out of range" signal is activated, when the measured signal falls below the set input minimum limit, or when it exceeds the input maximum limit.

If for some reason the input signal is lost, the value is fixed to the last actual measured cycle value. The value does not go down to the minimum if it has been something else at the time of the signal breaking.

Table. 5.5.12 - 267. Output settings and indications.

Name	Range	Step	Default	Description
Curve 1...10 update cycle	5...10 000ms	5ms	150ms	Defines the length of the input measurement update cycle. If the user wants a fast operation, this setting should be fairly low.
Scaled value handling	• Floating point • Integer out (Floor) • Integer (Ceiling) • Integer (Nearest)	-	Floating point	Rounds the milliampere signal output as selected.
Input value 1	0...4000	0.000 01	0	The measured input value at Curve Point 1.
Scaled output value 1	$-10^7...10^7$	0.000 01	0	Scales the measured milliampere signal at Point 1.
Input value 2	0...4000	0.000 01	1	The measured input value at Curve Point 2.
Scaled output value 1	$-10^7...10^7$	0.000 01	0	Scales the measured milliampere signal at Point 2.
Add curvepoint 3...20	• Not used • Used	-	Not used	Allows the user to create their own curve with up to twenty (20) curve points, instead of using a linear curve between two points.

5.5.13 Logical outputs

Logical outputs are used for sending binary signals out from a logic that has been built in the logic editor. Logical signals can be used for blocking functions, changing setting groups, controlling digital outputs, activating LEDs, etc. The status of logical outputs can also be reported to a SCADA system. 32 logical outputs are available. The figure below presents a logic output example where a signal from the circuit breaker failure protection function controls the digital output relay number 3 ("OUT3") when the circuit breaker's cart status is "In".

Figure. 5.5.13 - 220. Logic output example. Logical output is connected to an output relay in matrix.

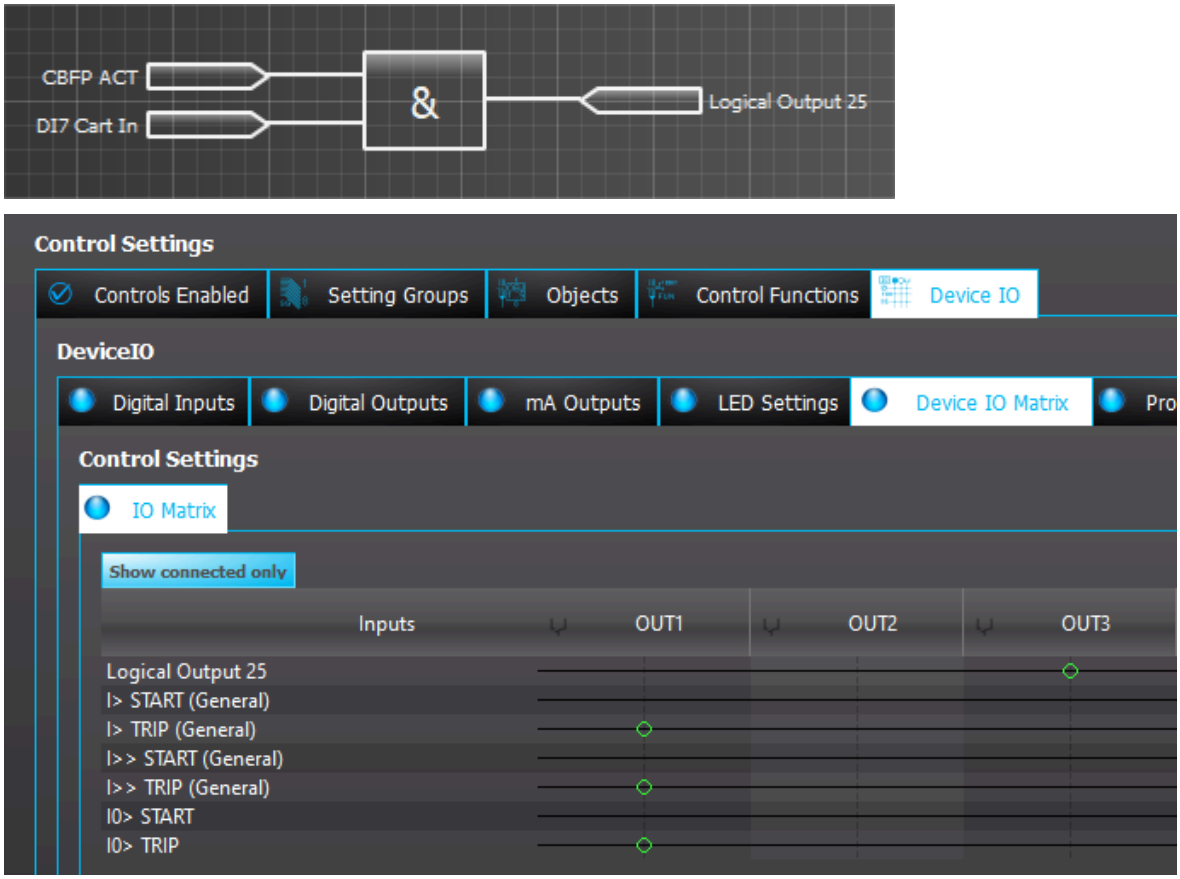

Logical output descriptions

Logical outputs can be given a description. The user defined description are displayed in most of the menus:

- logic editor
- matrix
- block settings
-
-
- etc.

© Arcteq Relays Ltd
IM00014

Table. 5.5.13 - 268. Logical output user description.

Name	Range	Default	Description
User editable description LO1...32	1...31 characters	Logical output 1...32	Description of the logical output. This description is used in several menu types for easier identification.

Events

The logical outputs (abbreviated "LOGIC" in event block names) generates events from the status changes in the events listed below. The user can select which event messages are stored in the main event buffer: ON, OFF, or both. The events triggered by the function are recorded with a time stamp. The function's output signals can be used for direct I/O controlling and user logic programming.

Table. 5.5.13 - 269. Event messages.

Event block name	Event names
LOGIC1	Logical out 1...32 ON/OFF

5.5.14 Logical inputs

Logical inputs are binary signals that a user can control manually to change the behavior of the AQ-200 unit or to give direct control commands. Logical inputs can be controlled with a virtual switch built in the mimic and from a SCADA system. Logical inputs are volatile signals: their status will always return to "0" when the AQ-200 device is rebooted. 32 logical inputs are available.

Logical inputs have two modes available: Hold and Pulse. When a logical input which has been set to "Hold" mode is controlled to "1", the input will switch to status "1" and it stays in that status until it is given a control command to go to status "0" or until the device is rebooted. When a logical input which has been set to "Pulse" mode is controlled to "1", the input will switch to status "1" and return back to "0" after 5 ms.

The figure below presents the operation of a logical input in Hold mode and in Pulse mode.

Figure. 5.5.14 - 221. Operation of logical input in "Hold" and "Pulse" modes.

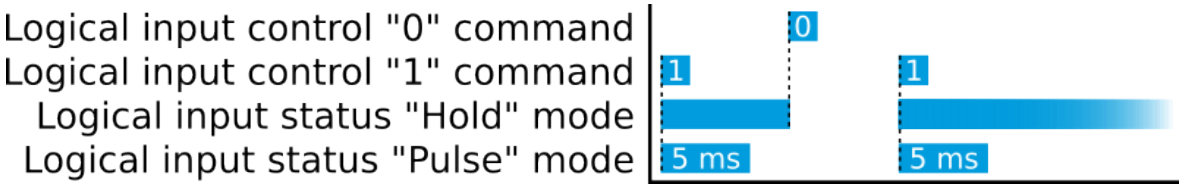

A logical input pulse can also be extended by connecting a DELAY-low gate to a logical output, as has been done in the example figure below.

Figure. 5.5.14 - 222. Extending a logical input pulse.

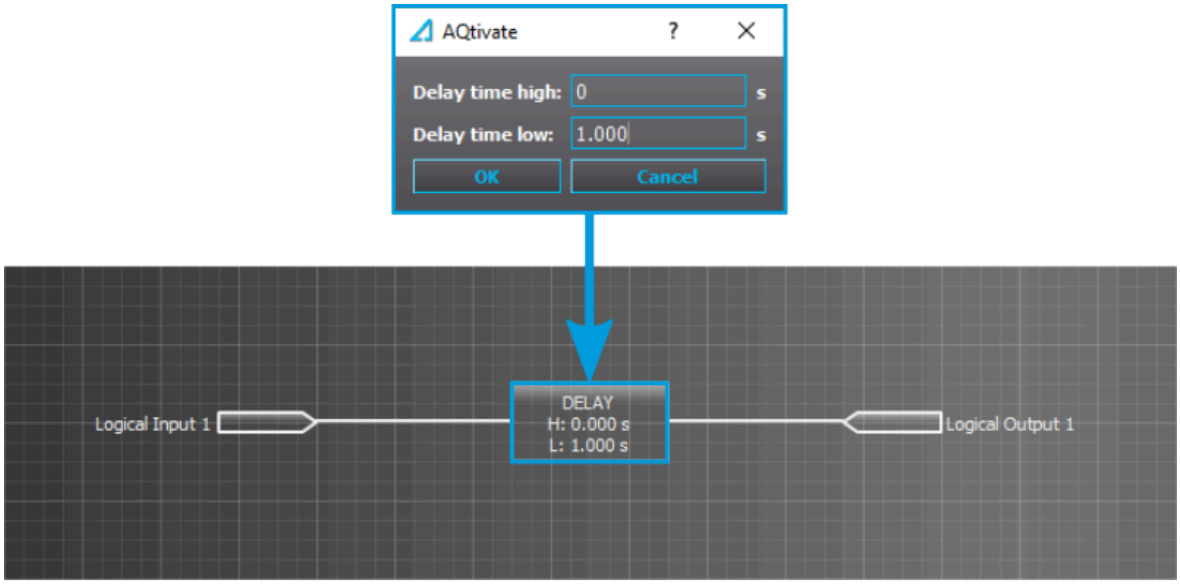

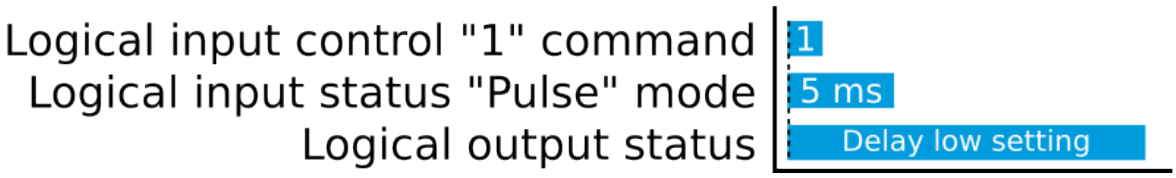

Logical input descriptions

Logical inputs can be given a description. The user defined description are displayed in most of the menus:

- logic editor
- matrix
- block settings
-
-
- etc.

Table. 5.5.14 - 270. Logical input user description.

Name	Range	Default	Description
User editable description LI1...32	1...31 characters	Logical input 1...32	Description of the logical input. This description is used in several menu types for easier identification.

Events

The logical outputs (abbreviated "LOGIC" in event block names) generates events from the status changes in the events listed below. The user can select which event messages are stored in the main event buffer: ON, OFF, or both. The events triggered by the function are recorded with a time stamp. The function's output signals can be used for direct I/O controlling and user logic programming.

© Arcteq Relays Ltd
IM00014

Table. 5.5.14 - 271. Event messages.

Event block name	Event names
LOGIC2	Logical in 1...32 ON/OFF

5.6 Monitoring functions

5.6.1 Current transformer supervision

The current transformer supervision function (abbreviated CTS in this document) is used for monitoring the CTs as well as the wirings between the device and the CT inputs for malfunctions and wire breaks. An open CT circuit can generate dangerously high voltages into the CT secondary side, and cause unintended activations of current balance monitoring functions.

Figure. 5.6.1 - 223. Secondary circuit fault in phase L1 wiring.

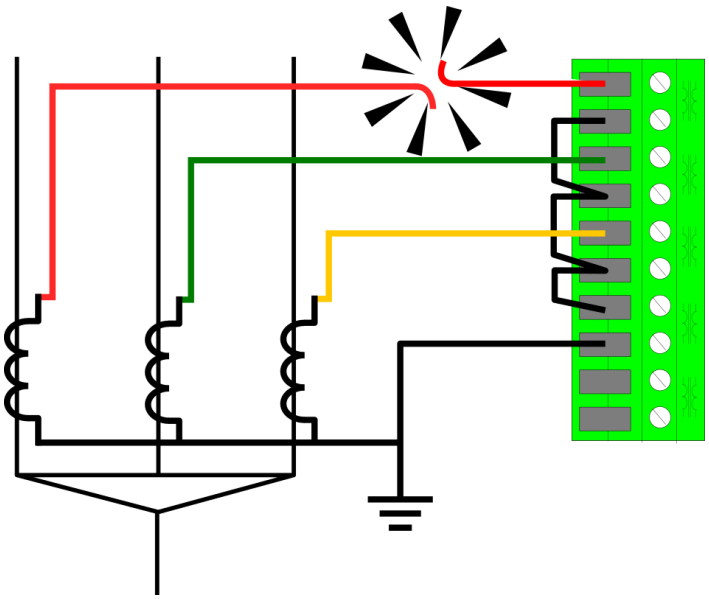

The function constantly monitors the instant values and the key calculated magnitudes of the phase currents. Additionally, the residual current circuit can be monitored if the residual current is measured from a dedicated residual current CT. The user can enable and disable the residual circuit monitoring at will.

The following conditions have to be met simultaneously for the function alarm to activate:

- None of the three-phase currents exceeds the I_{set} *high limit* setting.
- At least one of the three-phase currents exceeds the I_{set} *low limit* setting.
- At least one of the three-phase currents are below the I_{set} *low limit* setting.
- The ratio between the calculated minimum and maximum of the three-phase currents is below the I_{set} *ratio* setting.
- The ratio between the negative sequence and the positive sequence exceeds the *I2/I1 ratio* setting.
- The calculated difference (IL1+IL2+IL3+I0) exceeds the I_{sum} *difference* setting (optional).
- The above-mentioned condition is met until the set time delay for alarm.

Figure. 5.6.1 - 224. Simplified function block diagram of the CTS function.

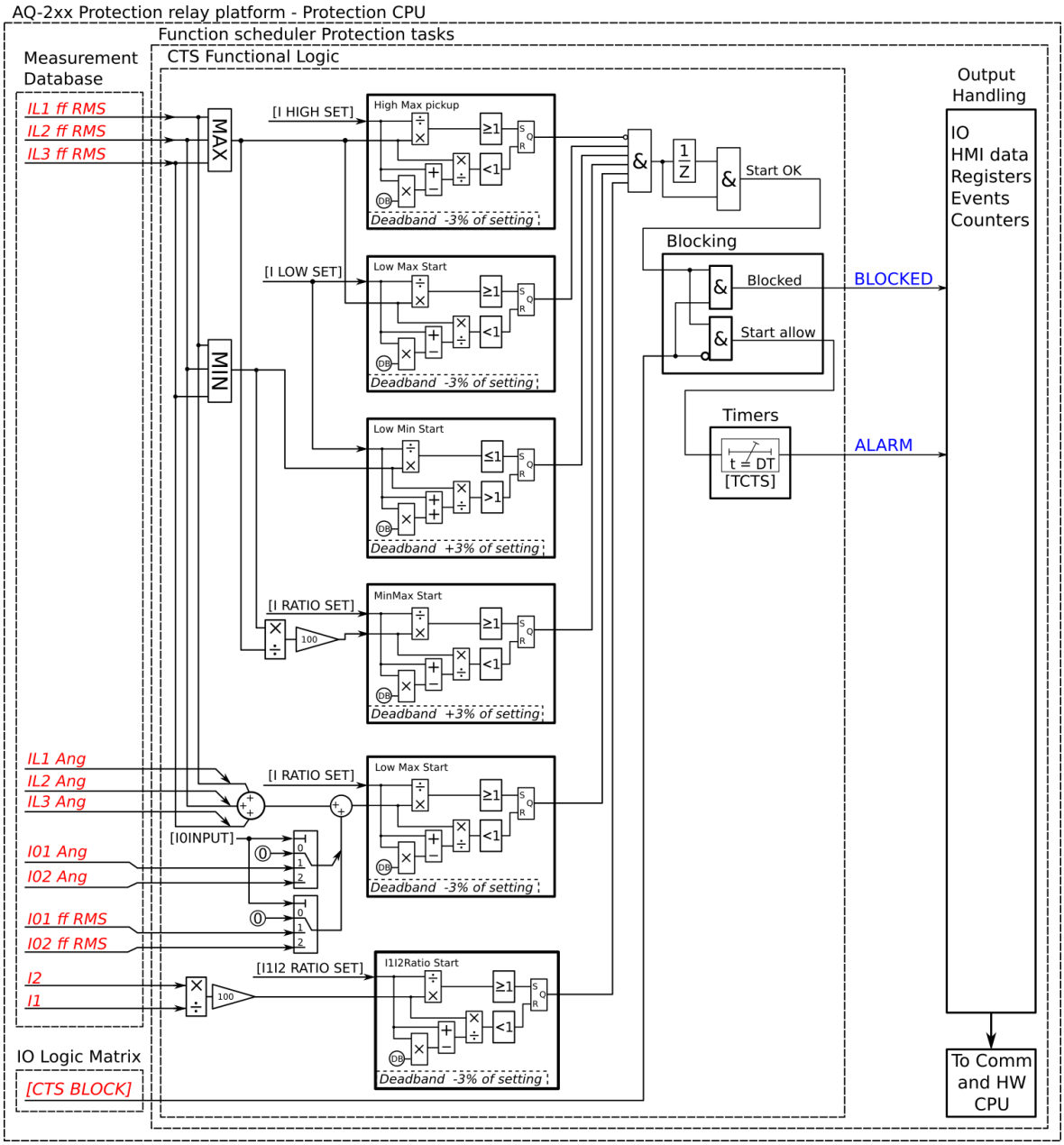

Measured input

The function block uses fundamental frequency component of phase current measurement values and residual current measurement values. The function supervises the angle of each current measurement channel. Positive sequence current and negative sequence currents are calculated from the phase currents. The user can select what is used for the residual current measurement: nothing, the I01 channel, or the I02 channel.

Table. 5.6.1 - 272. Measured inputs of the CTS function.

Signal	Description
I_{L1}RMS	Fundamental frequency component of phase L1 (A) current
I_{L2}RMS	Fundamental frequency component of phase L2 (B) current

© Arcteq Relays Ltd
IM00014

Signal	Description
I_{L3}RMS	Fundamental frequency component of phase L3 (C) current
I_{01}RMS	Fundamental frequency component of residual input I01
I_{02}RMS	Fundamental frequency component of residual input I02

General settings

The following general settings define the general behavior of the function. These settings are static i.e. it is not possible to change them by editing the setting group.

Table. 5.6.1 - 273. General settings of the function.

Name	Range	Default	Description
CTS force status to	• Normal • Alarm • Blocked	Normal	Force the status of the function. Visible only when *Enable stage forcing* parameter is enabled in *General* menu.
I0 input selection	• Not in use • I01 • I02	Not in use	Selects the measurement input for the residual current. If the residual current is measured with a separate CT, the residual current circuit can be monitored with the CTS function as well. However, this does not apply to summing connections (Holmgren, etc.). If the phase current CT is summed with I01 or I02, this selection should be set to "Not in use".
I0 direction	• Add • Subtract	Add	Defines the polarity of residual current channel connection.
Compensate natural unbalance	• - • Comp	-	When activated while the line is energized, the currently present calculated residual current is compensated to 0.

Pick-up settings

The I_{set} and $I0_{set}$ setting parameters control the current-dependent pick-up and activation of the current transformer supervision function. They define the minimum and maximum allowed measured current before action from the function. The function constantly calculates the ratio between the setting values and the measured magnitude (I_m) for each of the three phases and for the selected residual current input. The reset ratio of 97 % and 103% are built into the function and is always relative to the I_{set} value. The setting value is common for all measured amplitudes, and when the I_m exceeds the I_{set} value (in single, dual or all currents) it triggers the pick-up operation of the function.

Setting group selection controls the operating characteristics of the function, i.e. the user or user-defined logic can change function parameters while the function is running.

Table. 5.6.1 - 274. Pick-up settings.

Name	Range	Step	Default	Description
I_{set} high limit	0.01…40.00×I_n	0.01×I_n	1.20×I_n	Determines the pick-up threshold for phase current measurement. This setting limit defines the upper limit for the phase current's pick-up element. If this condition is met, it is considered as fault and the function is not activated.

Name	Range	Step	Default	Description
I_{set} low limit	0.01…40.00×I_n	0.01×I_n	0.10×I_n	Determines the pick-up threshold for phase current measurement. This setting limit defines the lower limit for the phase current's pick-up element. This condition has to be met for the function to activate.
I_{set} ratio	0.01…100.00%	0.01%	10.00%	Determines the pick-up ratio threshold between the minimum and maximum values of the phase current. This condition has to be met for the function to activate.
I2/I1 ratio	0.01…100.00%	0.01%	49.00%	Determines the pick-up ratio threshold for the negative and positive sequence currents calculated from the phase currents. This condition has to be met for the function to activate. The ratio is 50 % for a full single-phasing fault (i.e. when one of the phases is lost entirely). Setting this at 49 % allows a current of 0.01 × I_n to flow in one phase, wile the other two are at nominal current.
I_{sum} difference	0.01…40.00×I_n	0.01×I_n	0.10×I_n	Determines the pick-up ratio threshold for the calculated residual phase current and the measured residual current. If the measurement circuit is healthy, the sum of these two currents should be 0.
Time delay for alarm	0.000…1800.000s	0.005s	0.5s	Determines the delay between the activation of the function and the alarm.

Read-only parameters

The function's *Info* page displays useful, real-time information on the state of the protection function. It is accessed either through the device's HMI display, or through the setting tool software when it is connected to the device and its Live Edit mode is active.

Table. 5.6.1 - 275. Information displayed by the function.

Name	Range	Step	Description
Uncompensated residual unbalance Pri	• Normal • Start • Trip • Blocked	-	Displays the natural unbalance of current after compensating it with *Compensate natural unbalance* parameter.
Natural unbalance ang	-360.00...360.00 deg	0.01 deg	Displays the natural unbalance of angle after compensating it with *Compensate natural unbalance* parameter.
Measured current difference Isum, I0	0.00...50.00 xIn	0.01 xIn	Current difference between summed phases and residual current.
Measured angle difference Isum, I0	-360...360 deg	0.01 deg	Angle difference between summed phases and residual current.

Function blocking

The block signal is checked in the beginning of each program cycle. The blocking signal is received from the blocking matrix in the function's dedicated input. If the blocking signal is not activated when the pick-up element activates, a START signal is generated and the function proceeds to the time characteristics calculation.

© Arcteq Relays Ltd
IM00014

If the blocking signal is active when the pick-up element activates, a BLOCKED signal is generated and the function does not process the situation further. If the START function has been activated before the blocking signal, it resets and the release time characteristics are processed similarly to when the pick-up signal is reset.

The variables the user can set are binary signals from the system. The blocking signal needs to reach the device minimum of 5 ms before the set operating delay has passed in order for the blocking to activate in time.

Operating time characteristics

This function supports definite time delay (DT). For detailed information on this delay type please refer to the chapter "General properties of a protection function" and its section "Operating time characteristics".

Typical cases of current transformer supervision

The following nine examples present some typical cases of the current transformer supervision and their setting effects.

Figure. 5.6.1 - 225. All works properly, no faults.

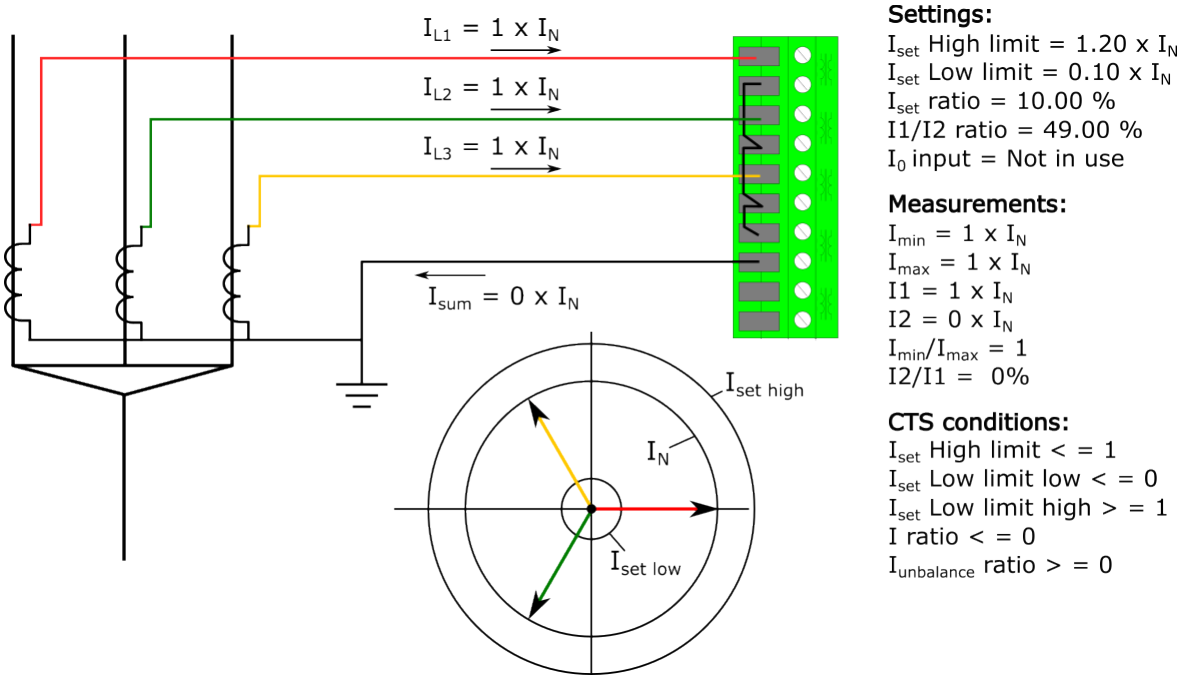

Figure. 5.6.1 - 226. Secondary circuit fault in phase L1 wiring.

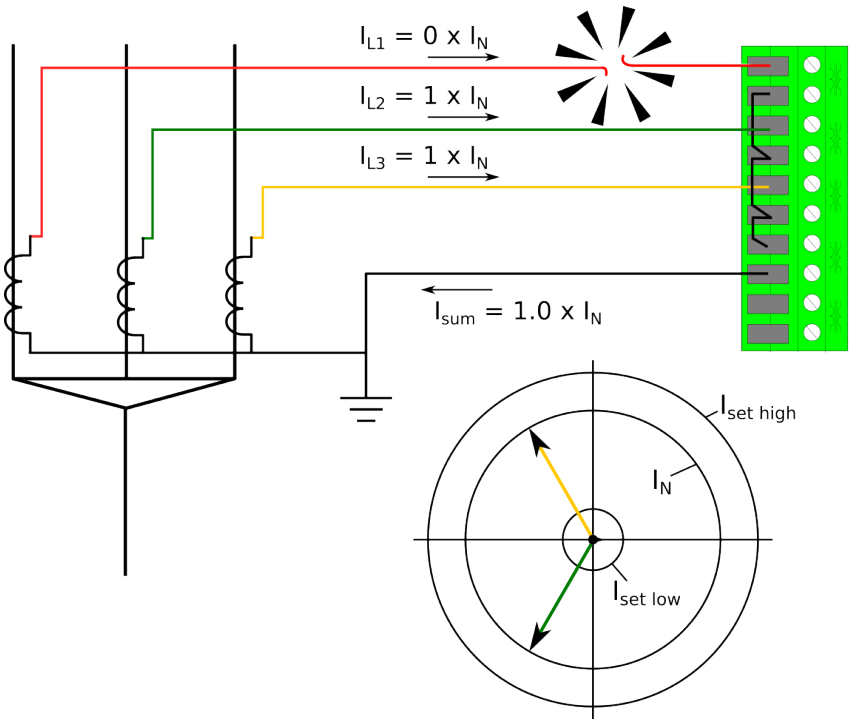

Settings:
I_{set} High limit = 1.20 x I_N
I_{set} Low limit = 0.10 x I_N
I_{set} ratio = 10.00 %
I1/I2 ratio = 49.00 %
I_0 input = Not in use

Measurements:
I_{min} = 0 x I_N
I_{max} = 1 x I_N
I1 = 0.67 x I_N
I2 = 0.33 x I_N
I_{min}/I_{max} = 0
I2/I1 = 50%

CTS conditions:
I_{set} High limit < = 1
I_{set} Low limit low < = 1
I_{set} Low limit high > = 1
I ratio < = 1
$I_{unbalance}$ ratio > = 1

When a fault is detected and all conditions are met, the CTS timer starts counting. If the situation continues until the set time has passed, the function issues an alarm.

Figure. 5.6.1 - 227. Primary circuit fault in phase L1 wiring.

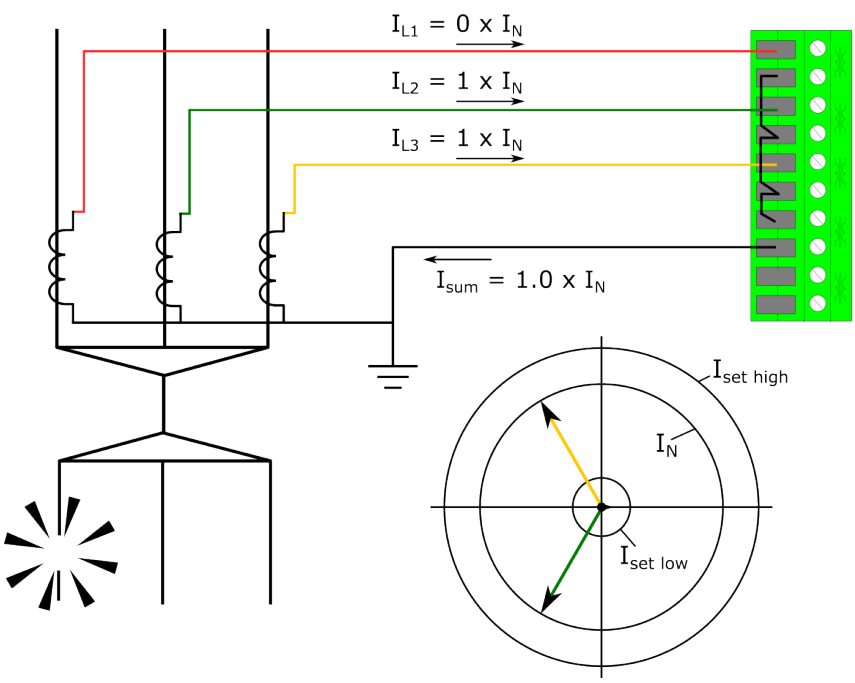

Settings:
I_{set} High limit = 1.20 x I_N
I_{set} Low limit = 0.10 x I_N
I_{set} ratio = 10.00 %
I1/I2 ratio = 49.00 %
I_0 input = Not in use

Measurements:
I_{min} = 0 x I_N
I_{max} = 1 x I_N
I1 = 0.67 x I_N
I2 = 0.33 x I_N
I_{min}/I_{max} = 0
I2/I1 = 50%

CTS conditions:
I_{set} High limit < = 1
I_{set} Low limit low < = 1
I_{set} Low limit high > = 1
I ratio < = 1
$I_{unbalance}$ ratio > = 1

In this example, distinguishing between a primary fault and a secondary fault is impossible. However, the situation meets the function's activation conditions, and if this state (secondary circuit fault) continues until the set time has passed, the function issues an alarm. This means that the function supervises both the primary and the secondary circuit.

© Arcteq Relays Ltd
IM00014

Figure. 5.6.1 - 228. No wiring fault but heavy unbalance.

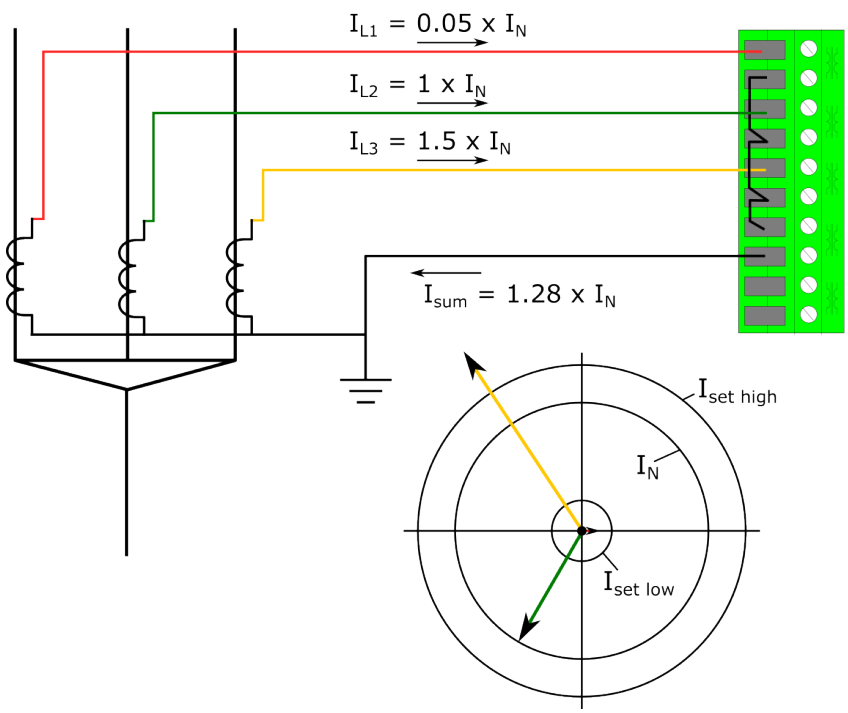

Settings:
I_{set} High limit = 1.20 x I_N
I_{set} Low limit = 0.10 x I_N
I_{set} ratio = 10.00 %
I1/I2 ratio = 49.00 %
I_0 input = Not in use

Measurements:
I_{min} = 0.05 x I_N
I_{max} = 1.50 x I_N
I1 = 0.85 x I_N
I2 = 0.43 x I_N
I_{min}/I_{max} = 0.7 %
I2/I1 = 50.03 %

CTS conditions:
I_{set} High limit < = 0
I_{set} Low limit low < = 1
I_{set} Low limit high > = 1
I ratio < = 1
$I_{unbalance}$ ratio > = 1

If any of the phases exceed the *I_{set} high limit* setting, the operation of the function is not activated. This behavior is applied to short-circuits and earth faults even when the fault current exceeds the *I_{set} high limit* setting.

Figure. 5.6.1 - 229. Low current and heavy unbalance.

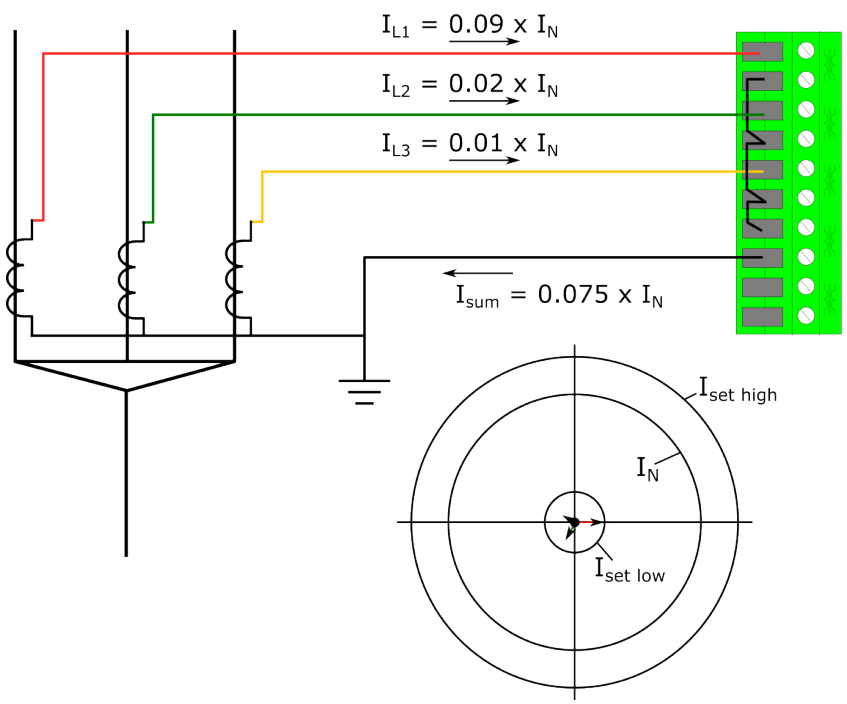

Settings:
I_{set} High limit = 1.20 x I_N
I_{set} Low limit = 0.10 x I_N
I_{set} ratio = 10.00 %
I1/I2 ratio = 49.00 %
I_0 input = Not in use

Measurements:
I_{min} = 0.01 x I_N
I_{max} = 0.09 x I_N
I1 = 0.04 x I_N
I2 = 0.03 x I_N
I_{min}/I_{max} = 11.0 %
I2/I1 = 62.92 %

CTS conditions:
I_{set} High limit < = 1
I_{set} Low limit low < = 1
I_{set} Low limit high > = 0
I ratio < = 1
$I_{unbalance}$ ratio > = 1

If all of the measured phase magnitudes are below the *I_{set} low limit* setting, the function is not activated even when the other conditions (inc. the unbalance condition) are met.

If the *I_{set} high limit* and *I_{set} low limit* setting parameters are adjusted according to the application's normal behavior, the operation of the function can be set to be very sensitive for broken circuit and conductor faults.

Figure. 5.6.1 - 230. Normal situation, residual current also measured.

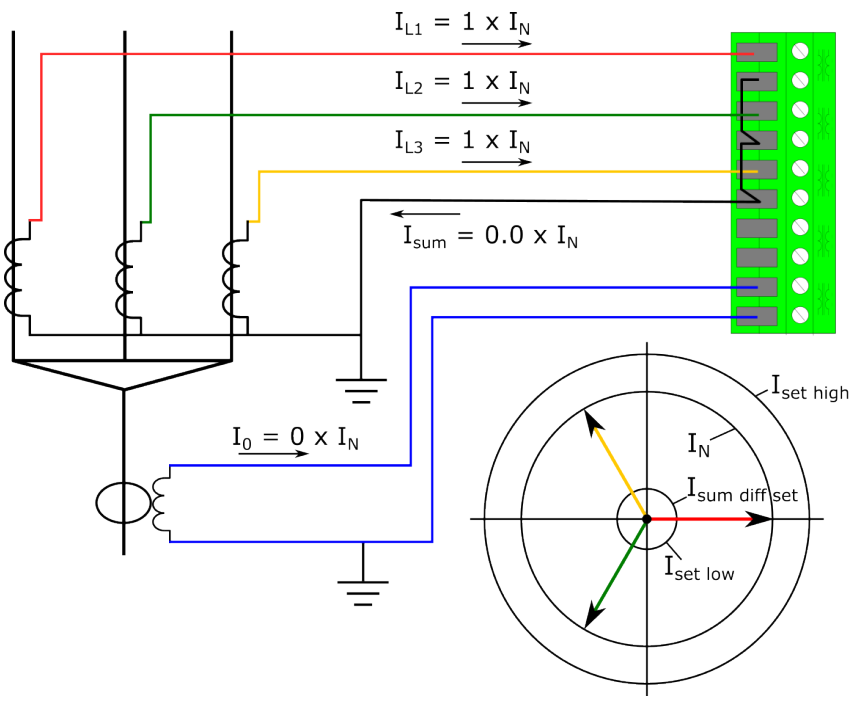

Settings:
I_{set} High limit = 1.20 x I_N
I_{set} Low limit = 0.10 x I_N
I_{set} ratio = 10.00 %
I1/I2 ratio = 49.00 %
I_0 input = I_{01}
I_{sum} Difference= 0.10 x I_N

Measurements:
I_{min} = 1 x I_N
I_{max} = 1 x I_N
I1 = 1 x I_N
I2 = 0 x I_N
I_{min}/I_{max} = 1
I2/I1 = 0
I_{sum} Difference= 0.0 x I_N

CTS conditions:
I_{set} High limit < = 1
I_{set} Low limit low < = 0
I_{set} Low limit high > = 1
I ratio < = 0
$I_{unbalance}$ ratio > = 0

When the residual condition is added with the "I0 input selection", the sum of the current and the residual current are compared against each other to verify the wiring condition.

Figure. 5.6.1 - 231. Broken secondary phase current wiring.

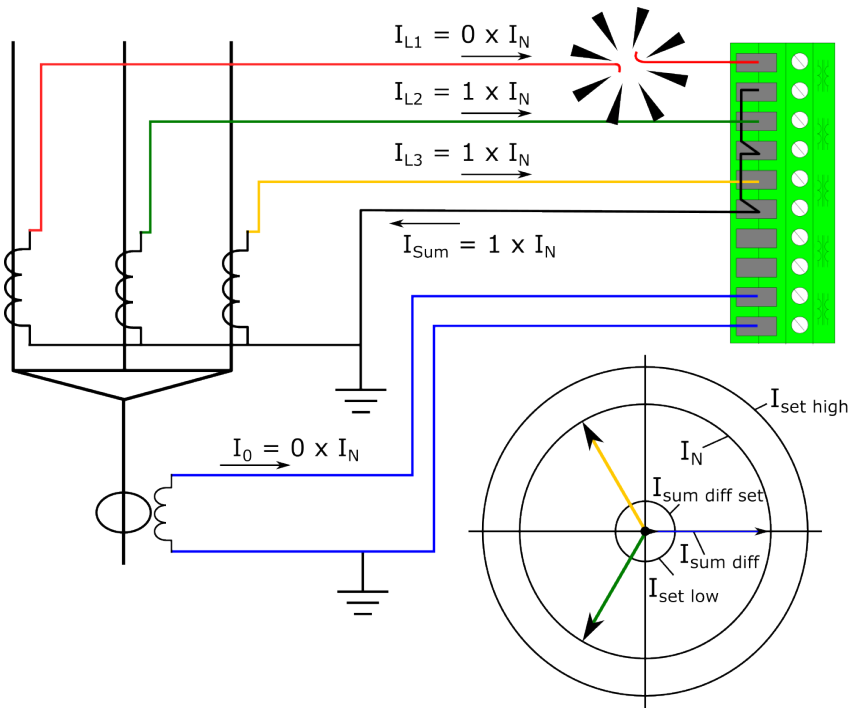

Settings:
I_{set} High limit = 1.20 x I_N
I_{set} Low limit = 0.10 x I_N
I_{set} ratio = 10.00 %
I1/I2 ratio = 49.00 %
I_0 input = I_{01}
I_{sum} Difference= 0.10 x I_N

Measurements:
I_{min} = 1 x I_N
I_{max} = 0 x I_N
I1 = 0.67 x I_N
I2 = 0.33 x I_N
I_{min}/I_{max} = 0
I2/I1 = 50 %
I_{sum} Difference= 1.0 x I_N

CTS conditions:
I_{set} High limit < = 1
I_{set} Low limit low < = 1
I_{set} Low limit high > = 1
I ratio < = 1
$I_{unbalance}$ ratio > = 1
I_{sum} Difference > = 1

© Arcteq Relays Ltd
IM00014

When phase current wire is broken all of the conditions are met in the CTS and alarm shall be issued in case if the situation continues until the set alarming time is met.

Figure. 5.6.1 - 232. Broken primary phase current wiring.

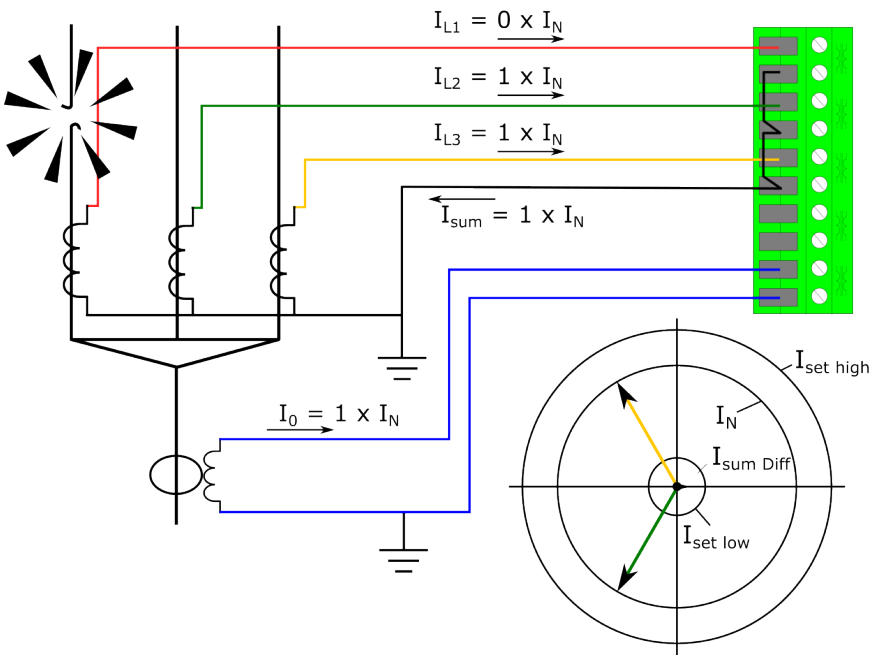

Settings:
I_{set} High limit = 1.20 x I_N
I_{set} Low limit = 0.10 x I_N
I_{set} ratio = 10.00 %
I1/I2 ratio = 49.00 %
I_0 input = I_{01}
I_{sum} Difference= 0.10 x I_N

Measurements:
I_{min} = 0 x I_N
I_{max} = 1 x I_N
I1 = 0.67 x I_N
I2 = 0.33 x I_N
I_{min}/I_{max} = 0
I2/I1 = 50 %
I_{sum} Difference= 0.0 x I_N

CTS conditions:
I_{set} High limit < = 1
I_{set} Low limit low < = 1
I_{set} Low limit high > = 1
I ratio < = 1
$I_{unbalance}$ ratio > = 1
I_{sum} Difference > = 0

In this example, all other condition are met except the residual difference. That is now 0 × I_n, which indicates a primary side fault.

Figure. 5.6.1 - 233. Primary side high-impedance earth fault.

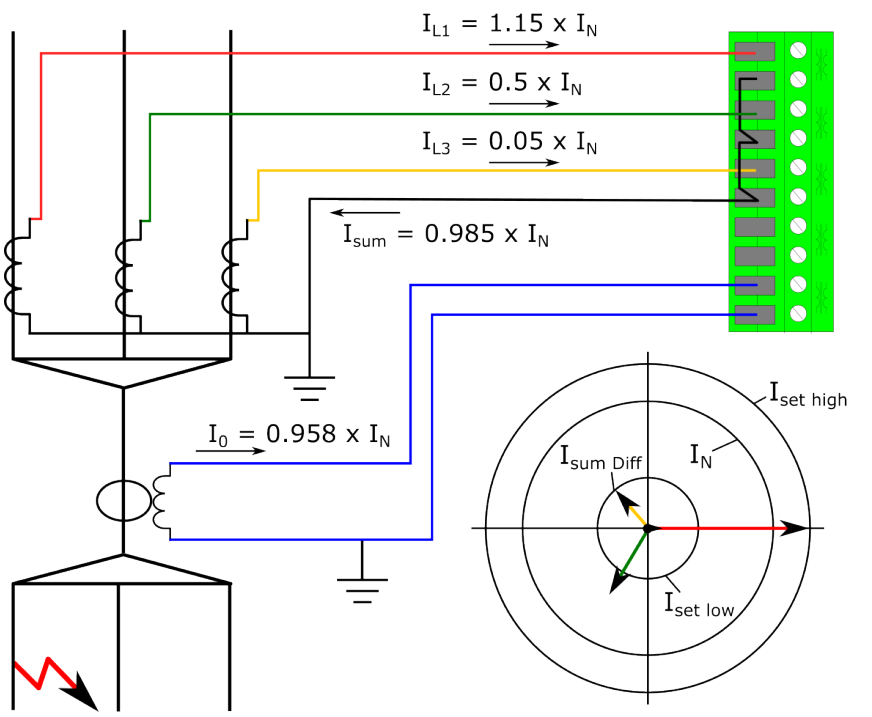

Settings:
I_{set} High limit = 1.20 x I_N
I_{set} Low limit = 0.10 x I_N
I_{set} ratio = 10.00 %
I1/I2 ratio = 49.00 %
I_0 input = I_{01}
I_{sum} Difference= 0.10 x I_N

Measurements:
I_{min} = 1 x I_N
I_{max} = 0 x I_N
I1 = 0.57 x I_N
I2 = 0.32 x I_N
I_{min}/I_{max} = 0.04
I2/I1 = 56.34 %
I_{sum} Difference= 0.0 x I_N

CTS conditions:
I_{set} High limit < = 1
I_{set} Low limit low < = 1
I_{set} Low limit high > = 1
I ratio < = 1
$I_{unbalance}$ ratio > = 1
I_{sum} Difference > = 0

In this example there is a high-impedance earth fault. It does not activate the function, if the measurement conditions are met, while the calculated and measured residual current difference does not reach the limit. The I_{sum} *difference* setting should be set according to the application in order to reach maximum security and maximum sensitivity for the network earthing.

Events and registers

The current transformer supervision function (abbreviated "CTS" in event block names) generates events and registers from the status changes in the events listed below. The user can select which event messages are stored in the main event buffer: ON, OFF, or both. The events triggered by the function are recorded with a time stamp.

The function's outputs can be used for direct I/O controlling and user logic programming. The function also provides a resettable cumulative counter for the CTS ALARM and BLOCKED events.

Table. 5.6.1 - 276. Event messages.

Event block name	Event names
CTS1	Alarm ON/OFF
CTS1	Block ON/OFF

The function registers its operation into the last twelve (12) time-stamped registers; this information is available for all provided instances separately. The register of the function records the ON event process data for ACTIVATED, BLOCKED, etc. The table below presents the structure of the function's register content.

Table. 5.6.1 - 277. Register content.

Register	Description
Date and time	dd.mm.yyyy hh:mm:ss.mss
Event	Event name
Trigger currents	The phase currents (L1, L2 & L3), the residual currents (I01 & I02), and the sequence currents (I1 & I2) on trigger time.
Time to CTSact	Time remaining before alarm activation.
Fault type	The status code of the monitored current.
Setting group in use	Setting group 1...8 active

5.6.2 Voltage transformer supervision (60)

Voltage transformer supervision is used to detect errors in the secondary circuit of the voltage transformer wiring and during fuse failure. This signal is mostly used as an alarming function or to disable functions that require adequate voltage measurement.

© Arcteq Relays Ltd
IM00014

Figure. 5.6.2 - 234. Secondary circuit fault in phase L1 wiring.

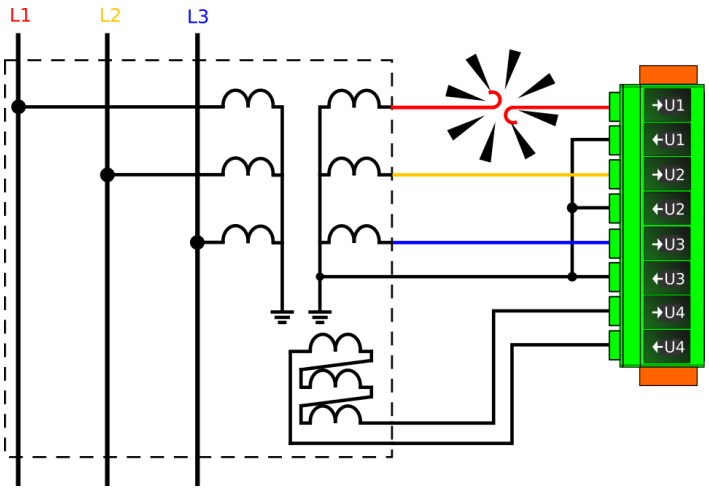

Figure. 5.6.2 - 235. Simplified function block diagram of the VTS function.

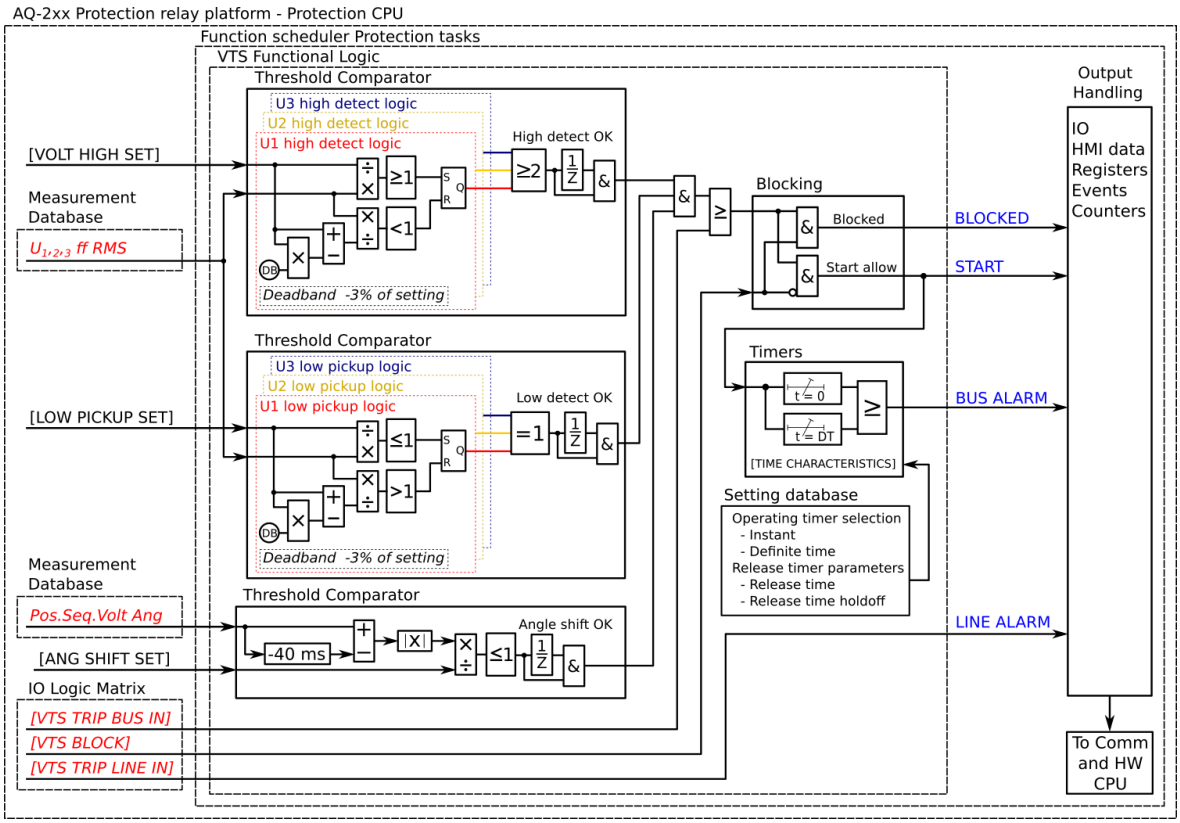

Measured input

The function block uses fundamental frequency component of voltage measurement channels. The function uses calculated positive, negative and zero sequence voltages. The function also monitors the angle of each voltage channel.

Table. 5.6.2 - 278. Measurement inputs of the voltage transformer supervision function.

Signal	Description
U_1RMS	Fundamental frequency component of U_1/V voltage measurement

Signal	Description
U_2RMS	Fundamental frequency component of U_2/V voltage measurement
U_3RMS	Fundamental frequency component of U_3/V voltage measurement
U_4RMS	Fundamental frequency component of U_4/V voltage measurement

Pick-up settings

The *Voltage low pick-up* and *Voltage high detect* setting parameters control the voltage-dependent pick-up and activation of the voltage transformer supervision function. The function's pick-up activates, if at least one of the three voltages is under the set *Voltage low pick-up* value, or if at least two of the three voltages exceed the set *Voltage high detect* value. The function constantly calculates the ratio between the setting values and the measured magnitude for each of the three phases.

Setting group selection controls the operating characteristics of the function, i.e. the user or user-defined logic can change function parameters while the function is running.

Table. 5.6.2 - 279. Pick-up settings.

Name	Range	Step	Default	Description
Voltage low pickup	0.05…0.50×U_n	0.01×U_n	0.05×U_n	If one the measured voltages is below low pickup value and two of the measured voltages exceed high detect value the function's pick-up activates.
Voltage high detect	0.01…1.10×U_n	0.01×U_n	0.80×U_n	
Angle shift limit	2.00…90.00deg	0.10deg	5.00deg	If the difference between the present angle and the angle 40 ms before is above the set value, the function's pick-up is blocked.
Bus fuse fail check	• No • Yes	-	Yes	Selects whether or not the state of the bus fuse is supervised. The supervised signal is determined the "VTS MCB Trip bus" setting (*I/O → Fuse failure inputs*).
Line fuse fail check	• No • Yes	-	Yes	Selects whether or not the state of the line fuse is supervised. The supervised signal is determined by the "VTS MCB Trip line" setting (*I/O → Fuse failure inputs*).

The voltage transformer supervision can also report several different states of the measured voltage. These can be seen in the function's *INFO* menu.

Name	Description
Bus dead	No voltages.
Bus Live VTS Ok	All of the voltages are within the set limits.
Bus Live VTS Ok SEQ Rev	All of the voltages are within the set limits **BUT** the voltages are in a reversed sequence.
Bus Live VTS Ok SEQ Undef	Voltages are within the set limits **BUT** the sequence cannot be defined.

© Arcteq Relays Ltd
IM00014

Name	Description
Bus Live VTS problem	Any of the VTS pick-up conditions are met.

Read-only parameters

The function's *Info* page displays useful, real-time information on the state of the protection function. It is accessed either through the device's HMI display, or through the setting tool software when it is connected to the device and its Live Edit mode is active.

Table. 5.6.2 - 280. Information displayed by the function.

Name	Range	Step	Description
VTS condition	• Normal • Start • VTLinefail • VTBusfail • Blocked	-	Displays status of the monitoring function.
Bus voltages	• Bus dead • Bus Live VTS Ok SEQ Ok • Bus Live VTS Ok SEQ Rev • Bus Live VTS Ok SEQ Undef • Bus Live VTS problem	-	Displays the status of bus voltages.
Expected operating time	0.000...1800.000s	0.005s	Displays the expected operating time when a fault occurs.
Time remaining to trip	-1800.000...1800.000s	0.005s	When the function has detected a fault and counts down time towards a operation, this displays how much time is left before operation occurs.

Function blocking

The block signal is checked in the beginning of each program cycle. The blocking signal is received from the blocking matrix in the function's dedicated input. If the blocking signal is not activated when the pick-up element activates, a START signal is generated and the function proceeds to the time characteristics calculation.

If the blocking signal is active when the pick-up element activates, a BLOCKED signal is generated and the function does not process the situation further. If the START function has been activated before the blocking signal, it resets and the release time characteristics are processed similarly to when the pick-up signal is reset.

The variables the user can set are binary signals from the system. The blocking signal needs to reach the device minimum of 5 ms before the set operating delay has passed in order for the blocking to activate in time.

Operating time characteristics for activation

This function supports definite time delay (DT). For detailed information on these delay types please refer to the chapter "General properties of a protection function" and its section "Operating time characteristics".

Events and registers

The voltage transformer supervision function (abbreviated "VTS" in event block names) generates events and registers from the status changes in the events listed below. The user can select which event messages are stored in the main event buffer: ON, OFF, or both. The events triggered by the function are recorded with a time stamp.

The function's outputs can be used for direct I/O controlling and user logic programming. The function also provides a resettable cumulative counter for the START, ALARM BUS, ALARM LINE and BLOCKED events.

Table. 5.6.2 - 281. Event messages.

Event block name	Event names
VTS1	Bus VT fail Start ON/OFF
VTS1	Bus VT fail Trip ON/OFF
VTS1	Bus VT fail Block ON/OFF
VTS1	Line VT fail ON/OFF
VTS1	Bus Fuse fail ON/OFF
VTS1	Line Fuse fail ON/OFF

The function registers its operation into the last twelve (12) time-stamped registers. The register of the function records the ON event process data for ACTIVATED, BLOCKED, etc. The table below presents the structure of the function's register content.

Table. 5.6.2 - 282. Register content.

Register	Description
Date and time	dd.mm.yyyy hh:mm:ss.mss
Event	Event name
Volt 1, 2, 3, 4 status	• No voltage • Voltage OK • Low voltage
System status	• Bus dead • Bus live, VTS OK, Seq. OK • Bus live, VTS OK, Seq. reversed • Bus live, VTS OK, Seq. undefined • Bus live, VTS fault
Input A, B, C, D angle diff	0.00...360.00deg

© Arcteq Relays Ltd
IM00014

Register	Description
Trip time remaining	Time remaining to alarm 0...1800s
Setting group in use	Setting group 1...8 active

5.6.3 Circuit breaker wear monitoring

The circuit breaker wear function is used for monitoring the circuit breaker's lifetime and its maintenance needs caused by interrupting currents and mechanical wear. The function uses the circuit breaker's manufacturer-supplied data for the breaker operating cycles in relation to the interrupted current magnitudes.

Figure. 5.6.3 - 236. Example of the circuit breaker interrupting life operations.

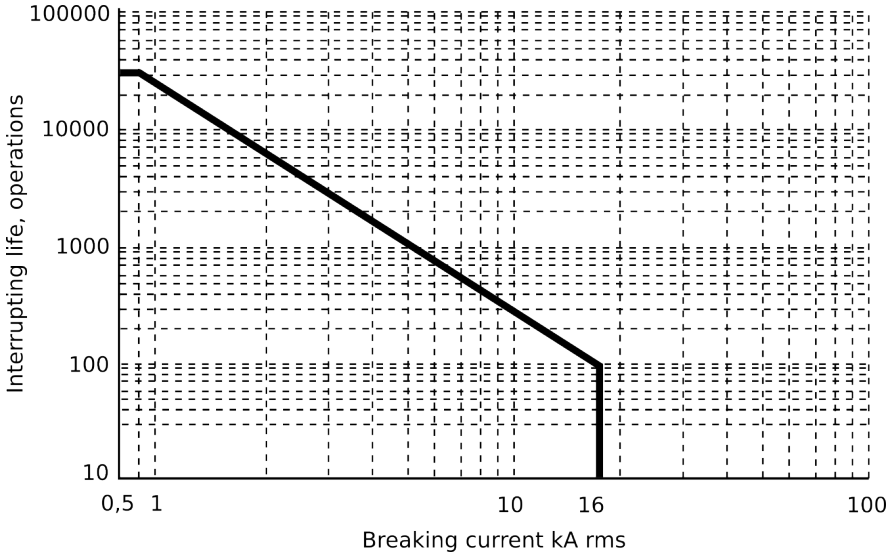

The function is triggered from the circuit breaker's "Open" command output and it monitors the three-phase current values in both the tripping moment and the normal breaker opening moment. The maximum value of interrupting life operations for each phase is calculated from these currents. The value is cumulatively deducted from the starting operations starting value. The user can set up two separate alarm levels, which are activated when the value of interrupting life operations is below the setting limit. The "Trip contact" setting defines the output that triggers the current monitoring at the breaker's "Open" command.

Figure. 5.6.3 - 237. Simplified function block diagram of the circuit breaker wear function.

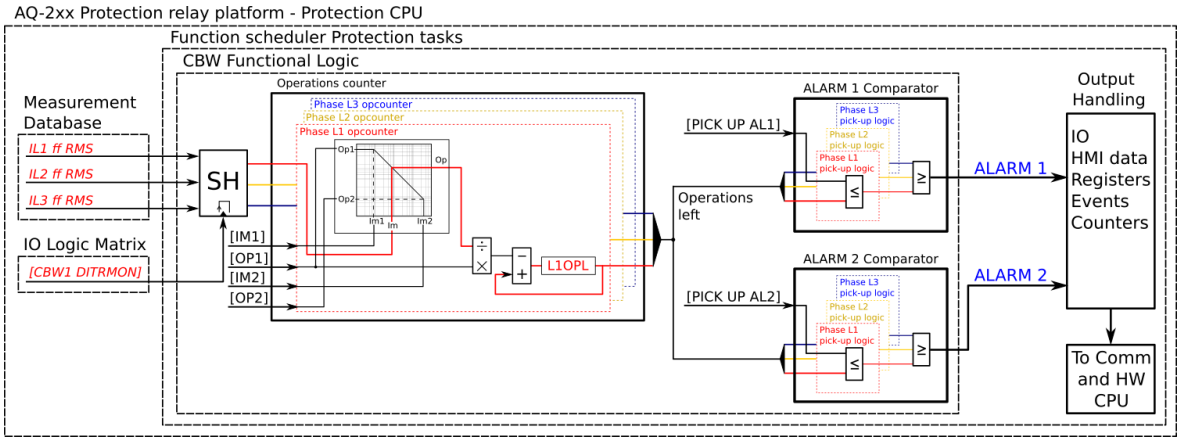

Measured input

The function block uses fundamental frequency component of phase current measurement values.

Table. 5.6.3 - 283. Measurement inputs of the circuit breaker wear function.

Signal	Description
I_{L1}RMS	Fundamental frequency component of phase L1 (A) current
I_{L2}RMS	Fundamental frequency component of phase L2 (B) current
I_{L3}RMS	Fundamental frequency component of phase L3 (C) current

General settings

The following general settings define the general behavior of the function. These settings are static i.e. it is not possible to change them by switching the setting group.

Table. 5.6.3 - 284. General settings.

Name	Range	Default	Description
CBW force status to	• Normal • Alarm1 On • Alarm2 On	Normal	Force the status of the function. Visible only when *Enable stage forcing* parameter is enabled in *General* menu.

Circuit breaker characteristics settings

The circuit breaker characteristics are set by two operating points, defined by the nominal breaking current, the maximum allowed breaking current and their respective operation settings. This data is provided by the circuit breaker's manufacturer.

© Arcteq Relays Ltd
IM00014

Table. 5.6.3 - 285. Settings for circuit breaker characteristics.

Name	Range	Step	Default	Description
Operations 1	0…200 000	1	50 000	The number of interrupting life operations at the nominal current (Close - Open).
Operations 2	0…200 000	1	100	The number of interrupting life operations at the rated breaking current (Open).
Current 1 (I_{nom})	0…100.00kA	0.01kA	1kA	The rated normal current (RMS).
Current 2 (I_{max})	0…100.00kA	0.01kA	20kA	The rated short-circuit breaking current (RMS).

Pick-up settings

For the alarm stages Alarm 1 and Alarm 2, the user can set the pick-up level for the number of operations left. The pick-up setting is common for all phases and the alarm stage picks up if any of the phases goes below this setting.

Table. 5.6.3 - 286. Pick-up settings.

Name	Range	Default	Description
Alarm 1	• Disabled • Enabled	Disabled	Enable and disable the Alarm 1 stage.
Alarm 1 Set	0…200 000	1 000	Defines the pick-up threshold for remaining operations. When the number of remaining operations is below this setting, the ALARM 1 signal is activated.
Alarm 2	• Disabled • Enabled	Disabled	Enable and disable the Alarm 2 stage.
Alarm 2 Set	0…200 000	100	Defines the pick-up threshold for remaining operations. When the number of remaining operations is below this setting, the ALARM 2 signal is activated.

Setting example

Let us examine the settings, using a low-duty vacuum circuit breaker as an example. The image below presents the technical specifications provided by the manufacturer, with the data relevant to our settings highlighted in red:

Rated voltage, kV	24
Rated current, A	800
Rated power frequency test voltage, kV	50
Rated frequency, Hz	50/60
Rated impulse test voltage, kV peak	125
Partial discharge level at 1,1 rated voltage kV, pC	<10
Rated short-circuit breaking current, kA	16
Rated short-circuit making current, kA peak	41.5
Short time withstand current, 4s, kA	16
Mechanical life, CO cycles, not less than	30,000
Interrupting life operations, not less than	
at rated current	30,000
at breaking current	100
at other currents	see Fig.41
Closing time, ms, not more than	35
Opening time, ms, not more than	15
Breaking time, ms, not more than	25
Main contact resistance, µOhm, not more than	40
Maximum ambient temperature, C°	+55
Minimum ambient temperature, C°	-40
Design class (according to IEC 60932)	1
Electrical endurance class at rated IEEE/IEC duty	E2
Mechanical endurance class at rated IEEE/IEC duty	M2
Capacitive current switching class	C2
"Mechanical vibration and shock withstand capability, IEC 60721, IEC 60068"	Class 4M4
Maximum altitude above sea level, m	3000*
Maximum humidity, non condensing	98 %
Weight, kg - LD_1	35
Weight, kg - LD_6	55

Now, we set the stage as follows:

Parameter	Setting
Current 1	0.80 kA
Operation 1	30 000 operations
Current 2	16.00 kA
Operations 2	100 operations
Enable Alarm 1	Enabled
Alarm 1 Set	1000 operations
Enable Alarm 2	Enabled
Alarm 2 Set	100 operations

© Arcteq Relays Ltd
IM00014

With these settings, Alarm 1 is issued when the cumulative interruption counter for any of the three phases dips below the set 1000 remaining operations ("Alarm 1 Set"). Similarly, when any of the counters dips below 100 remaining operations, Alarm 2 is issued.

Read-only parameters

The function's *Info* page displays useful, real-time information on the state of the protection function. It is accessed either through the device's HMI display, or through the setting tool software when it is connected to the device and its Live Edit mode is active.

Table. 5.6.3 - 287. Information displayed by the function.

Name	Range	Description
CBW condition	• Normal • Alarm1 On • Alarm2 On	Displays the status of the function.
Breaker operations	-	Cumulative counter of "open" operations.
Alarm 1 counter	-	Alarm 1 operation counter.
Alarm 2 counter	-	Alarm 2 operation counter.
L1 Operations left	-	Operations left for phase L1.
L2 Operations left	-	Operations left for phase L2.
L3 Operations left	-	Operations left for phase L3.

Events and registers

The circuit breaker wear function (abbreviated "CBW" in event block names) generates events and registers from the status changes in the events listed below. The user can select which event messages are stored in the main event buffer: ON, OFF, or both. The function's outputs can be used for direct I/O controlling and user logic programming. The events triggered by the function are recorded with a time stamp.

The function also provides a resettable cumulative counter for the "Open" operations as well as the ALARM 1 and ALARM 2 events.

Table. 5.6.3 - 288. Event messages.

Event block name	Event names
CBW1	CBWEAR1 Triggered
CBW1	CBWEAR1 Alarm 1 ON/OFF
CBW1	CBWEAR1 Alarm 2 ON/OFF

The function registers its operation into the last twelve (12) time-stamped registers. The register of the function records the ON event process data. The table below presents the structure of the function's register content.

Table. 5.6.3 - 289. Register content.

Register	Description
Date and time	dd.mm.yyyy hh:mm:ss.mss
Event	Event name
Trigger current	Phase currents on trigger time
Deducted Op	L1/L2/L3 Deducted operations from the cumulative sum
Operations left	L1/L2/L3 Operations left

5.6.4 Current total harmonic distortion (THD)

The total harmonic distortion (THD) function is used for monitoring the content of the current harmonic. The THD is a measurement of the harmonic distortion present, and it is defined as the ratio between the sum of all harmonic components' powers and the power of the fundamental frequency (RMS).

Harmonics can be caused by different sources in electric networks such as electric machine drives, thyristor controls, etc. The function's monitoring of the currents can be used to alarm of the harmonic content rising too high; this can occur when there is an electric quality requirement in the protected unit, or when the harmonics generated by the process need to be monitored.

The function constantly measures the phase and residual current magnitudes as well as the harmonic content of the monitored signals up to the 31st harmonic component. When the function is activated, the measurements are also available for the mimic and the measurement views in the HMI carousel. The user can also set the alarming limits for each measured channel if the application so requires.

The monitoring of the measured signals can be selected to be based either on an amplitude ratio or on the above-mentioned power ratio. The difference is in the calculation formula (as shown below):

Figure. 5.6.4 - 238. THD calculation formulas.

$$THD_P = \frac{{I_{x2}}^2 + {I_{x3}}^2 + {I_{x4}}^2 \dots {I_{x31}}^2}{{I_{x1}}^2}$$

, where
I = measured current,
x= measurement input,
n = harmonic number

$$THD_A = \sqrt{\frac{{I_{x2}}^2 + {I_{x3}}^2 + {I_{x4}}^2 \dots {I_{x31}}^2}{{I_{x1}}^2}}$$

, where
I = measured current,
x= measurement input,
n = harmonic number

While both of these formulas exist, the power ratio (*THD*$_P$) is recognized by the IEEE, and the amplitude ratio (*THD*$_A$) is recognized by the IEC.

© Arcteq Relays Ltd
IM00014

Figure. 5.6.4 - 239. Simplified function block diagram of the total harmonic distortion monitor function.

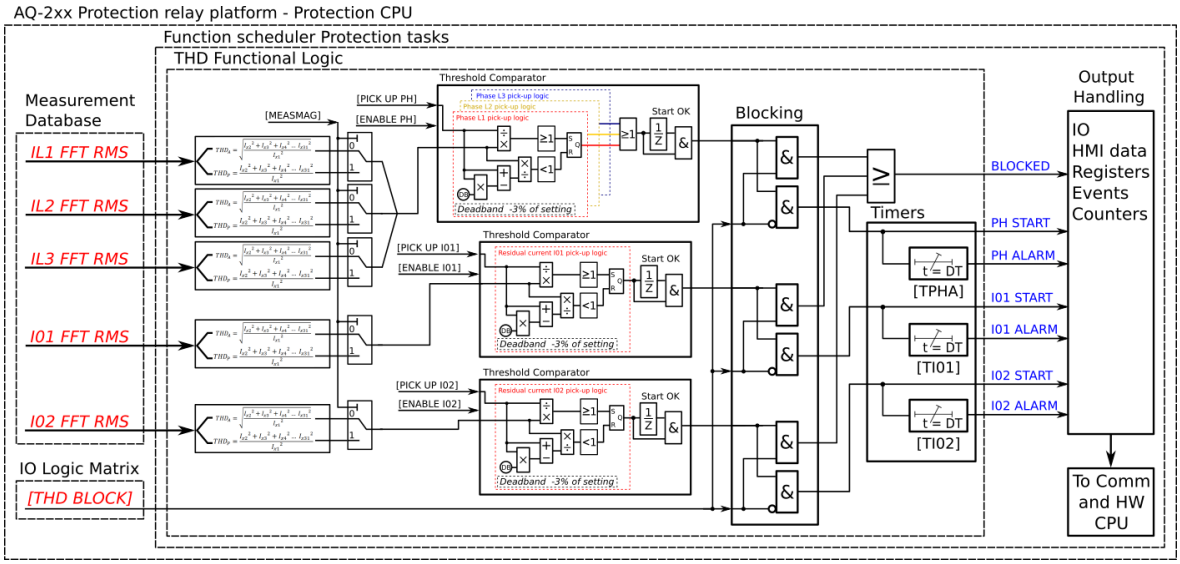

Measured input

The function block uses phase and residual current measurement channels. The function always uses FFT measurement of the whole harmonic specter of 32 components from each measured current channel. From these measurements the function calculates either the amplitude ratio or the power ratio.

Table. 5.6.4 - 290. Measurement inputs of the total harmonic distortion monitor function.

Signal	Description
I_{L1}FFT	FFT measurement of phase L1 (A) current
I_{L2}FFT	FFT measurement of phase L2 (B) current
I_{L3}FFT	FFT measurement of phase L3 (C) current
I_{01}FFT	FFT measurement of residual I01 current
I_{02}FFT	FFT measurement of residual I02 current

The selection of the calculation method is made with a setting parameter (common for all measurement channels).

General settings

The following general settings define the general behavior of the function. These settings are static i.e. it is not possible to change them by editing the setting group.

Table. 5.6.4 - 291. General settings.

Name	Range	Default	Description
Measurement magnitude	• Amplitude • Power	Amplitude	Defines which available measured magnitude the function uses.

Pick-up settings

The *Phase*$_{THD}$, *I01*$_{THD}$and *I02*$_{THD}$ setting parameters control the the pick-up and activation of the function. They define the maximum allowed measured current THD before action from the function. Before the function activates alarm signals, their corresponding pick-up elements need to be activated with the setting parameters *Enable phase THD alarm*, *Enable I01 THD alarm* and *Enable I02 THD alarm*. The function constantly calculates the ratio between the setting values and the calculated THD for each of the three phases. The reset ratio of 97 % is built into the function and is always relative to the setting value. The setting value is common for all measured phases. When the calculated THD exceeds the pick-up value (in single, dual or all phases), it triggers the pick-up operation of the function.

Setting group selection controls the operating characteristics of the function, i.e. the user or user-defined logic can change function parameters while the function is running.

Table. 5.6.4 - 292. Pick-up settings.

Name	Range	Step	Default	Description
Enable phase THD alarm	• Enabled • Disabled	-	Enabled	Enables and disables the THD alarm function from phase currents.
Enable I01 THD alarm	• Enabled • Disabled	-	Enabled	Enables and disables the THD alarm function from residual current input I01.
Enable I02 THD alarm	• Enabled • Disabled	-	Enabled	Enables and disables the THD alarm function from residual current input I02.
Phase THD pick-up	0.10…100.00%	0.01%	10.00%	The pick-up setting for the THD alarm element from the phase currents. At least one of the phases' measured THD value has to exceed this setting in order for the alarm signal to activate.
I01 THD pick-up	0.10…100.00%	0.01%	10.00%	The pick-up setting for the THD alarm element from the residual current I01. The measured THD value has to exceed this setting in order for the alarm signal to activate.
I02 THD pick-up	0.10…100.00%	0.01%	10.00%	The pick-up setting for the THD alarm element from the residual current I02. The measured THD value has to exceed this setting in order for the alarm signal to activate.

Read-only parameters

The function's *Info* page displays useful, real-time information on the state of the protection function. It is accessed either through the device's HMI display, or through the setting tool software when it is connected to the device and its Live Edit mode is active.

© Arcteq Relays Ltd
IM00014

Table. 5.6.4 - 293. Information displayed by the function.

Name	Range	Description
THD condition	• Normal • Start • Alarm • Blocked	Displays status of the monitoring function.

Function blocking

The block signal is checked in the beginning of each program cycle. The blocking signal is received from the blocking matrix in the function's dedicated input. If the blocking signal is not activated when the pick-up element activates, a START signal is generated and the function proceeds to the time characteristics calculation.

If the blocking signal is active when the pick-up element activates, a BLOCKED signal is generated and the function does not process the situation further. If the START function has been activated before the blocking signal, it resets and the release time characteristics are processed similarly to when the pick-up signal is reset.

The variables the user can set are binary signals from the system. The blocking signal needs to reach the device minimum of 5 ms before the set operating delay has passed in order for the blocking to activate in time.

Operating time characteristics for activation and reset

This function supports definite time delay (DT). The following table presents the setting parameters for the function's time characteristics.

Table. 5.6.4 - 294. Settings for operating time characteristics.

Name	Range	Step	Default	Description
Phase THD alarm delay	0.000…1800.000s	0.005s	10.000s	Defines the delay for the alarm timer from the phase currents' measured THD.
I01 THD alarm delay	0.000…1800.000s	0.005s	10.000s	Defines the delay for the alarm timer from the residual current I01's measured THD.
I02 THD alarm delay	0.000…1800.000s	0.005s	10.000s	Defines the delay for the alarm timer from the residual current I02's measured THD.

Events and registers

The total harmonic distortion monitor function (abbreviated "THD" in event block names) generates events and registers from the status changes in the events listed below. The user can select which event messages are stored in the main event buffer: ON, OFF, or both. The events triggered by the function are recorded with a time stamp.

The function's outputs can be used for direct I/O controlling and user logic programming. The function also provides a resettable cumulative counter for the START, ALARM and BLOCKED events.

Table. 5.6.4 - 295. Event messages.

Event block name	Event names
THD1	THD Start Phase ON/OFF
THD1	THD Start I01 ON/OFF
THD1	THD Start I02 ON/OFF
THD1	THD Alarm Phase ON/OFF
THD1	THD Alarm I01 ON/OFF
THD1	THD Alarm I02 ON/OFF
THD1	Blocked ON/OFF

The function registers its operation into the last twelve (12) time-stamped registers. The register of the function records the ON event process data for START, ALARM and BLOCKED. The table below presents the structure of the function's register content.

Table. 5.6.4 - 296. Register content.

Register	Description
Date and time	dd.mm.yyyy hh:mm:ss.mss
Event	Event name
L1h, L2h, L3h Fault THD	Start/Alarm THD of each phase.
Setting group in use	Setting group 1...8 active.

5.6.5 Fault locator (21FL)

The fault locator function is used for recording an estimated distance to the point where a fault has occurred. It is mostly used in directional overcurrent protection or distance protection applications but can be also triggered by other protections. The function can be used if all three phase currents and three phase voltages have been connected to the device. The triggering signals, the triggering current and "Reactance per km" must be set in the configuration.

Measured input

Function block uses fundamental frequency component of current and voltage measurements to calculate phase-to-phase or phase-to-ground loop impedances.

Table. 5.6.5 - 297. Measurement inputs of the 21FL function.

Signal	Description
I_{L1}RMS	Fundamental frequency component of phase L1 (A) current measurement
I_{L2}RMS	Fundamental frequency component of phase L2 (B) current measurement
I_{L3}RMS	Fundamental frequency component of phase L3 (C) current measurement

© Arcteq Relays Ltd
IM00014

Signal	Description
U_1RMS	Fundamental frequency component of U_1/V voltage measurement
U_2RMS	Fundamental frequency component of U_2/V voltage measurement
U_3RMS	Fundamental frequency component of U_3/V voltage measurement
U_4RMS	Fundamental frequency component of U_4/V voltage measurement

Fault locator triggering

The "Trig fault locator" input defines which signal triggers the fault locator. This can be any binary signal generated by the unit. Typically, a TRIP signal of a protection function or the "Open" status of the breaker is used as the triggering input.

Several conditions have to be met before the fault locator can trigger and record the distance to a fault. First, when receiving a triggering signal, the function checks if the calculation is blocked. The calculation blocking signals are determined by the "Block calculation" matrix set by the user. Next, the function checks if any phase-to-earth voltages are available. If there are no available voltages, the function can only record phase-to-phase impedance loops. If there are available voltages, the function can also record phase-to-neutral impedance loops. Depending on the measured phase currents at the moment the triggering signal was received, the recorded impedance loop is selected from the available options. See the table "Required current conditions" for more information on which conditions have to be met to trigger impedance recording.

Setting group selection controls the operating characteristics of the function, i.e. the user or user-defined logic can change function parameters while the function is running.

Table. 5.6.5 - 298. Pick-up settings.

Name	Range	Step	Default	Description
Trigger current>	0.0…40.0×I_n	0.1×I_n	1×I_n	Sets the trigger current. Affects which impedance loop is recorded, if anything is recorded at all (see the table below).
Reactance per km	0.000…5.000Ω/km	0.001Ω/km	0.125Ω/km	This setting is used for calculating the distance to a fault. Primary ohm value.

Table. 5.6.5 - 299. Required current conditions.

Currents over limit	P-E voltages available	P-E voltages not available
	Recorded impedance	
I_{L1}, I_{L2}, I_{L3}	X_{L12}	X_{L12}
I_{L1}, I_{L2}	X_{L12}	X_{L12}
I_{L2}, I_{L3}	X_{L23}	X_{L23}
I_{L1}, I_{L3}	X_{L31}	X_{L31}
I_{L1}	X_{L1}	No trigger
I_{L2}	X_{L2}	No trigger

Currents over limit	P-E voltages available	P-E voltages not available
I_{L3}	X_{L3}	No trigger

If no current measurement requirements are fulfilled when the function receives a triggering signal, the function will not record impedance at all.

Function blocking

The block signal is checked in the beginning of each program cycle. The blocking signal is received from the blocking matrix in the function's dedicated input. If the blocking signal is active when the pick-up element activates, a BLOCKED signal is generated and the function does not process the situation further.

The variables the user can set are binary signals from the system. The blocking signal needs to reach the device minimum of 5 ms before the set operating delay has passed in order for the blocking to activate in time.

Events

The fault locator function (abbreviated "FLX" in event block names) generates events and registers from the status changes in the events listed below. The user can select which event messages are stored in the main event buffer: ON, OFF, or both. The events triggered by the function are recorded with a time stamp. The function also provides a resettable cumulative counter for the fault locator triggering events.

Table. 5.6.5 - 300. Event messages.

Event block name	Event names
FLX1	Flocator triggered ON/OFF
FLX1	Flocator Calculation ON/OFF

The function registers its operation into the last twelve (12) time-stamped registers. The table below presents the structure of the function's register content.

Table. 5.6.5 - 301. Register content.

Register	Description
Date and time	dd.mm.yyyy hh:mm:ss.mss
Event	Event name
Fault type	• L1-L2 • L2-L3 • L3-L1 • L1-N • L2-N • L3-N • L1-L2-L3
Fault direction	• Not detected • Forward • Reverse

© Arcteq Relays Ltd
IM00014

Register	Description
Fault reactance	In ohms (Ω)
Fault current	In per-unit value
Fault current	In primary value
Fault distance	In kilometers (km)
Setting group in use	Setting group 1...8 active.

5.6.6 Disturbance recorder (DR)

The disturbance recorder is a high-capacity (64 MB permanent flash memory) and fully digital recorder integrated to the protection relay. The maximum sample rate of the recorder's analog channels is 64 samples per cycle. The recorder also supports 96 digital channels simultaneously with the twenty (20) measured analog channels. Maximum capacity of recordings is 100.

The recorder provides an effective tool to analyze the performance of the power system during network disturbance situations. The recorder's output is in general COMTRADE format and it is compatible with most recording viewers and injection devices. The files are based on the IEEE standard C37.111-1999. Captured recordings can be injected as playback with secondary testing tools that support the COMTRADE file format. Playback of files might help to analyze the fault, or can be simply used for educational purposes.

Analog and digital recording channels

Up to 20 analog recording channels and 96 digital channels are supported.

Table. 5.6.6 - 302. Analog recording channels.

Signal	Description
IL1	Phase current I_{L1}
IL2	Phase current I_{L2}
IL3	Phase current I_{L3}
I01c	Residual current I_{01} coarse*
I01f	Residual current I_{01} fine*
I02c	Residual current I_{02} coarse*
I02f	Residual current I_{02} fine*
IL1”	Phase current I_{L1} (CT card 2)
IL2”	Phase current I_{L2} (CT card 2)
IL3”	Phase current I_{L3} (CT card 2)
I01”c	Residual current I_{01} coarse* (CT card 2)
I01”f	Residual current I_{01} fine* (CT card 2)

Signal	Description
I02”c	Residual current I_{02} coarse* (CT card 2)
I02”f	Residual current I_{02} fine* (CT card 2)
U1(2)VT1	Line-to-neutral U_{L1} or line-to-line voltage U_{L12} (VT card 1)
U2(3)VT1	Line-to-neutral U_{L2} or line-to-line voltage U_{L23} (VT card 1)
U3(1)VT1	Line-to-neutral U_{L3} or line-to-line voltage U_{L31} (VT card 1)
U0(ss)VT1	Zero sequence voltage U_0 or synchrocheck voltage U_{SS} (VT card 1)
F tracked 1	Tracked frequency of reference 1
F tracked 2	Tracked frequency of reference 2
F tracked 3	Tracked frequency of reference 3
ISup	Current measurement module voltage supply supervision (CT card 1)
ISup"	Current measurement module voltage supply supervision (CT card 2)
USup	Voltage measurement module voltage supply supervision (VT card 1)
IL1'''	Phase current I_{L1} (CT card 3)
IL2'''	Phase current I_{L2} (CT card 3)
IL3'''	Phase current I_{L3} (CT card 3)
I01'''c	Residual current I_{01} coarse* (CT card 3)
I01'''f	Residual current I_{01} fine* (CT card 3)
I02'''c	Residual current I_{02} coarse* (CT card 3)
I02'''f	Residual current I_{02} fine* (CT card 3)
ISup_3	Current measurement module voltage supply supervision (CT card 3)
UL1(2)VT2	Line-to-neutral U_{L1} or line-to-line voltage U_{L12} (VT card 2)
UL2(3)VT2	Line-to-neutral U_{L2} or line-to-line voltage U_{L23} (VT card 2)
UL3(1)VT2	Line-to-neutral U_{L3} or line-to-line voltage U_{L31} (VT card 2)
U0(SS)VT2	Zero sequence voltage U_0 or synchrocheck voltage U_{SS} (VT card 2)
USup_2	Voltage measurement module voltage supply supervision (VT card 2)

*NOTE: There are two signals for each residual current channel in the disturbance recorder: coarse and fine. A coarse signal is capable of sampling in the full range of the current channel but suffers a loss of accuracy at very low currents. A fine signal is capable of sampling at very low currents and with high accuracy but cuts off at higher currents. Table below lists performance of both channels with fine and coarse gain.

© Arcteq Relays Ltd
IM00014

Table. 5.6.6 - 303. Residual current channel performance with coarse or residual gain.

Channel	Coarse gain range	Fine gain range	Fine gain peak
I01	0...150 A	0...10 A	15 A
I02	0...75 A	0...5 A	8 A

Table. 5.6.6 - 304. Digital recording channels – Measurements.

Signal	Description	Signal	Description
Currents			
Pri.Pha.curr.ILx	Primary phase current ILx (IL1, IL2, IL3)	Pha.curr.ILx TRMS Pri	Primary phase current TRMS (IL1, IL2, IL3)
Pha.angle ILx	Phase angle ILx (IL1, IL2, IL3)	Pos./Neg./Zero seq.curr.	Positive/Negative/Zero sequence current
Pha.curr.ILx	Phase current ILx (IL1, IL2, IL3)	Sec.Pos./Neg./Zero seq.curr.	Secondary positive/negative/zero sequence current
Sec.Pha.curr.ILx	Secondary phase current ILx (IL1, IL2, IL3)	Pri.Pos./Neg./Zero seq.curr.	Primary positive/negative/zero sequence current
Pri.Res.curr.I0x	Primary residual current I0x (I01, I02)	Pos./Neg./Zero seq.curr.angle	Positive/Negative/Zero sequence current angle
Res.curr.angle I0x	Residual current angle I0x (I01, I02)	Res.curr.I0x TRMS	Residual current TRMS I0x (I01, I02)
Res.curr.I0x	Residual current I0x (I01, I02)	Res.curr.I0x TRMS Sec	Secondary residual current TRMS I0x (I01, I02)
Sec.Res.curr.I0x	Secondary residual current I0x (I01, I02)	Res.curr.I0x TRMS Pri	Primary residual current TRMS I0x (I01, I02)
Pri.cal.I0	Primary calculated I0	Pha.Lx ampl. THD	Phase Lx amplitude THD (L1, L2, L3)
Sec.calc.I0	Secondary calculated I0	Pha.Lx pow. THD	Phase Lx power THD (L1, L2, L3)
Calculated I0	Calculated I0	Res.I0x ampl. THD	Residual I0x amplitude THD (I01, I02)
Calculated angle	Calculated I0 phase angle	Res.I0x pow. THD	Residual I0x power THD (I01, I02)
Pha.curr.ILx TRMS	Phase current TRMS ILx (IL1, IL2, IL3)	P-P curr.ILx	Phase-to-phase current ILx (IL1, IL2, IL3)
Pha.curr.ILx TRMS Sec	Secondary phase current TRMS (IL1, IL2, IL3)	P-P curr.I0x	Phase-to-phase current I0x (I01, I02)
Voltages			
Signal	Description	Signal	Description

Signal	Description	Signal	Description
Ux Volt p.u.	Ux voltage in per-unit values (U1, U2, U3, U4)	System volt ULxx mag	Magnitude of the system voltage ULxx (UL12, UL23, UL31)
Ux Volt pri	Primary Ux voltage (U1, U2, U3, U4)	System volt ULxx mag(kV)	Magnitude of the system voltage ULxx in kilovolts (UL12, UL23, UL31)
Ux Volt sec	Secondary Ux voltage (U1, U2, U3, U4)	System volt ULxx ang	Angle of the system voltage ULxx (UL12, UL23, UL31)
Ux Volt TRMS p.u.	Ux voltage TRMS in per-unit values (U1, U2, U3, U4)	System volt ULx mag	Magnitude of the system voltage ULx (UL12, UL23, UL31)
Ux Volt TRMS pri	Primary Ux voltage TRMS (U1, U2, U3, U4)	System volt ULx mag(kV)	Magnitude of the system voltage ULx in kilovolts (UL1, UL2, UL3)
Ux Volt TRMS sec	Secondary Ux voltage TRMS (U1, U2, U3, U4)	System volt ULx ang	Angle of the system voltage ULx (UL1, UL2, UL3)
Pos/Neg./Zero seq.Volt.p.u.	Positive/Negative/Zero sequence voltage in per-unit values	System volt U0 mag	Magnitude of the system voltage U0
Pos./Neg./Zero seq.Volt.pri	Primary positive/ negative/zero sequence voltage	System volt U0 mag(kV)	Magnitude of the system voltage U0 in kilovolts
Pos./Neg./Zero seq.Volt.sec	Secondary positive/ negative/zero sequence voltage	System volt U0 mag(%)	Magnitude of the system voltage U0 in percentages
Ux Angle	Ux angle (U1, U2, U3, U4)	System volt U0 ang	Angle of the system voltage U0
Pos./Neg./Zero Seq volt.Angle	Positive/Negative/Zero sequence voltage angle	Sample shift	-
Angle difference correction	-	Measured voltage delta ULx	-
Resistive and reactive currents			
ILx Resistive Current p.u.	ILx resistive current in per-unit values (IL1, IL2, IL3)	Pos.seq. Resistive Current Pri.	Primary positive sequence resistive current
ILx Reactive Current p.u.	ILx reactive current in per-unit values (IL1, IL2, IL3)	Pos.seq. Reactive Current Pri.	Primary positive sequence reactive current
Pos.Seq. Resistive Current p.u.	Positive sequence resistive current in per-unit values	I0x Residual Resistive Current Pri.	Primary residual resistive current I0x (I01, I02)

© Arcteq Relays Ltd
IM00014

Signal	Description	Signal	Description
Pos.Seq. Reactive Current p.u.	Positive sequence reactive current in per-unit values	I0x Residual Reactive Current Pri.	Primary residual reactive current I0x (I01, I02)
I0x Residual Resistive Current p.u.	I0x residual resistive current in per-unit values (I01, I02)	ILx Resistive Current Sec.	Secondary resistive current ILx (IL1, IL2, IL3)
I0x Residual Reactive Current p.u.	I0x residual ractive current in per-unit values (I01, I02)	ILx Reactive Current Sec.	Secondary reactive current ILx (IL1, IL2, IL3)
ILx Resistive Current Pri.	Primary resistive current ILx (IL1, IL2, IL3)	I0x Residual Resistive Current Sec.	Secondary residual resistive current I0x (I01, I02)
ILx Reactive Current Pri.	Primary reactive current ILx (IL1, IL2, IL3)	I0x Residual Reactive Current Sec.	Secondary residual reactive current I0x (I01, I02)
Power, GYB, frequency			
Lx PF	Lx power factor (L1, L2, L3)	Curve x Input	Input of Curve x (1, 2, 3, 4)
POW1 3PH Apparent power (S)	Three-phase apparent power	Curve x Output	Output of Curve x (1, 2, 3, 4)
POW1 3PH Apparent power (S MVA)	Three-phase apparent power in megavolt-amperes	Enablefbasedfunctions(VT1)	Enable frequency-based functions
POW1 3PH Active power (P)	Three-phase active power	Track.sys.f.	Tracked system frequency
POW1 3PH Active power (P MW)	Three-phase active power in megawatts	Sampl.f. used	Used sample frequency
POW1 3PH Reactive power (Q)	Three-phase reactive power	Tr f CH x	Tracked frequency (channels A, B, C)
POW1 3PH Reactive power (Q MVar)	Three-phase reactive power in megavars	Alg f Fast	Fast frequency algorithm
POW1 3PH Tan(phi)	Three-phase tangent phi	Alg f avg	Average frequency algorithm
POW1 3PH Cos(phi)	Three-phase cosine phi	Frequency based protections blocked	When true ("1"), all frequency-based protections are blocked.
3PH PF	Three-phase power factor	f atm. Protections (when not measurable returns to nominal)	Frequency at the moment. If the system nominal is set to 50 Hz, this will show "50 Hz".
Primary resistance L1/L2/L3/L12/L23/L31 R	Primary resistance of phases	Primary impedance Z1/Z2/Z3/Z12/Z23/Z31	Primary impedance of each loop

Signal	Description	Signal	Description
Secondary resistance L1/L2/L3/L12/L23/L31 R	Secondary resistance of phases	Secondary impedance Z1/Z2/Z3/Z12/Z23/Z31	Secondary impedance of each loop
Primary pos.seq. resistance Z1P R	Primary ositive sequence resistance	Impedance angle Z1/Z2/Z3/Z12/Z23/Z31	Impedance angle of each loop
Primary pos.seq. reactance Z1P X	Primary positive sequence reactance	Primary pos.seq. impedance Z1P	Primary positive sequence impedance
Secondary pos.seq. resistance Z1P R	Secondary positive sequence resistance	Secondary pos.seq. impedance Z1P	Secondary positive sequence impedance
Secondary pos.seq. reactance Z1P X	Secondary positive sequence reactance	Angle Z1P	Positive sequence impedance angle
Max primary LL impedance	Maximum line-to-line impedance loop	Max primary LE impedance	Maximum line-to-earth impedance loop
Neutral conductance G (Pri)	Primary neutral conductance	f atm. Display (when not measurable is 0 Hz)	Frequency at the moment. If the frequency is not measurable, this will show "0 Hz".
Neutral susceptance B (Pri)	Primary neutral susceptance	f meas qlty	Quality of tracked frequency
Neutral admittance Y (Pri)	Primary neutral admittance	f meas from	Indicates which of the three voltage or current channel frequencies is used by the device.
Neutral admittance Y (Ang)	Neutral admittace angle	SS1.meas.frqs	Synchrocheck – the measured frequency from voltage channel 1
I01 Resistive component (Pri)	Primary resistive component I01	SS2.meas.frqs	Synchrocheck – the measured frequency from voltage channel 2
I01 Capacitive component (Pri)	Primary capacitive component I01	Enable f based functions	Status of this signal is active when frequency-based protection functions are enabled.
Curve 1…10 Input	Scaled curve input	Curve 1…10 Output	Scaled curve output

Table. 5.6.6 - 305. Digital recording channels – Binary signals.

Signal	Description	Signal	Description
DIx	Digital input 1...11	Timer x Output	Output of Timer 1...10
Open/close control buttons	Active if buttons I or 0 in the unit's front panel are pressed.	Internal Relay Fault active	If the unit has an internal fault, this signal is active.
Status PushButton x On	Status of Push Button 1...12 is ON	(Protection, control and monitoring event signals)	(see the individual function description for the specific outputs)
Status PushButton x Off	Status of Push Button 1...12 is OFF	Always True/False	"Always false" is always "0". Always true is always "1".

© Arcteq Relays Ltd
IM00014

Signal	Description	Signal	Description
Forced SG in use	Stage forcing in use	OUTx	Output contact statuses
SGx Active	Setting group 1...8 active	GOOSE INx	GOOSE input 1...64
Double Ethernet LinkA down	Double ethernet communication card link A connection is down.	GOOSE INx quality	Quality of GOOSE input 1...64
Double Ethernet LinkB down	Double ethernet communication card link B connection is down.	Logical Input x	Logical input 1...32
MBIO ModA Ch x Invalid	Channel 1...8 of MBIO Mod A is invalid	Logical Output x	Logical output 1...64
MBIO ModB Ch x Invalid	Channel 1...8 of MBIO Mod B is invalid	NTP sync alarm	If NTP time synchronization is lost, this signal will be active.
MBIO ModB Ch x Invalid	Channel 1...8 of MBIO Mod C is invalid	Ph.Rotating Logic control 0=A-B-C, 1=A-C-B	Phase rotating order at the moment. If true ("1") the phase order is reversed.

Recording settings and triggering

Disturbance recorder can be triggered manually or automatically by using the dedicated triggers. Every signal listed in "Digital recording channels" can be selected to trigger the recorder.

The number of analog and digital channels together with the sample rate and the time setting affect the recording size. See calculation examples below in the section titled "Estimating the maximum length of total recording time". The recording size affects how many recordings can be stored at a time, but the number can't exceed 100 recordings.

Table. 5.6.6 - 306. Recorder control settings.

Name	Range	Description
Recorder enabled	• Enabled • Disabled	Enables and disables the disturbance recorder function.
Recorder status	• Recorder ready • Recording triggered • Recording and storing • Storing recording • Recorder full • Wrong config	Indicates the status of recorder. "Wrong config" is activated if: • "Pre-triggering time" is longer than "Max length of recording" setting • "Max amount of recordings" is "1" and "Recording mode" is "FIFO". • "1ms" digital channel sample rate is selected when analog channel sample rate is 8 or 16 s/c.
Clear record+	$0 \ldots 2^{32}-1$	Clears selected recording. If "1" is inserted, first recording will be cleared from memory. If "10" is inserted, tenth (10th) recording will be cleared from memory.
Manual trigger	• - • Trig	Triggers disturbance recording manually. This parameter will return back to "-" automatically.

Name	Range	Description
Clear all records	• - • Clear	Clears all disturbance recordings.
Clear newest record	• - • Clear	Clears the newest stored disturbance recording.
Clear oldest record	• - • Clear	Clears the oldest stored disturbance recording.
Max. number of recordings	0…100	Displays the maximum number of recordings that can be stored in the device's memory with settings currently in use. The maximum number of recordings can go up to 100.
Max. length of a recording	0.000...1800.000s	Displays the maximum length of a single recording.
Max. location of the pre-trigger	0.000...1800.000s	Displays the highest pre-triggering time that can be set with the settings currently in use.
Recordings in memory	0…100	Displays how many recordings are stored in the memory.

Table. 5.6.6 - 307. Recorder trigger setting.

Name	Description
Recorder trigger	Selects the trigger input(s). Clicking the "Edit" button brings up a pop-up window, and checking the boxes enable the selected triggers.

Table. 5.6.6 - 308. Recorder settings.

Name	Range	Default	Description
Recording length	0.100...1800.000s	1s	Sets the length of a recording.
Recording mode	• FIFO • Keep olds	FIFO	Selects what happens when the memory is full. "FIFO" (= first in, first out) replaces the oldest stored recording with the latest one. "Keep olds" does not accept new recordings.
Analog channel samples	• 64s/c • 32s/c • 16s/c • 8s/c	64s/c	Selects the sample rate of the disturbance recorder in samples per cycle. The samples are saved from the measured wave according to this setting.
Digital channel samples	• 5 ms	5 ms	The fixed sample rate of the recorded digital channels. Recorded digital channels can be chosen with "Recorder digital channels" below.
Pretriggering time	0.2…15.0s	0.2s	Sets the recording length before the trigger.

© Arcteq Relays Ltd
IM00014

Name	Range	Default	Description
Analog recording CH1...CH20	0…8 freely selectable channels	-	Selects the analog channel for recording. Please see the list of all available analog channels in the section titled "Analog and digital recording channels".
Automatically get recordings	• Disabled • Enabled	Disabled	Enables and disables the automatic transfer of recordings. The recordings are taken from the device's protection CPU and transferred to the device's FTP directory in the communication CPU; the FTP client then automatically loads the recordings from the device and transfers them further to the SCADA system. Please note that when this setting is enabled, all new disturbance recordings will be pushed to the FTP server of the device. Up to six (6) recordings can be stored in the FTP at once. Once those six recordings have been retrieved and removed, more recordings will then be pushed to the FTP. When a recording has been sent to the FTP server of the device, it is no longer accessible through setting tools *Disturbance recorder → Get DR files* command.
Recorder digital channels	0…96 freely selectable channels	-	Selects the digital channel for recording. Please see the list of all available digital channels in the section titled "Analog and digital recording channels".

NOTICE!
The disturbance recorder is not ready unless the "Max. length of a recording" parameter is showing some value other than zero. At least one trigger input has to be selected in the "Recorder Trigger" setting to fulfill this term.

NOTICE!
When writing new disturbance recorder settings to the device, any existing recordings in the device memory will be deleted.

Estimating the maximum length of total recording time

Once the disturbance recorder's settings have been made and loaded to the device, the device automatically calculates and displays the total length of recordings. However, if the user wishes to confirm this calculation, they can do so with the following formula. Please note that the formula assumes there are no other files in the FTP that share the 64 MB space.

$$\frac{\text{Total sample reserve}}{(f_n * (Ch_{an} + 1) * SR) + (200\ Hz * Ch_{dig})}$$

Where:

- total sample reserve = the number of samples available in the FTP when no other files are saved; calculated by dividing the total number of available bytes by 4 bytes (=the size of one sample); e.g. 64 306 588 bytes/4 bytes = 16 076 647 samples.
- f_n = the nominal frequency (Hz).
- Ch_{an} = the number of analog channels recorded; "+ 1" stands for the time stamp for each recorded sample.
- SR = the selected sample rate (s/c).
- 200 Hz = the rate at which digital channels are always recorded, i.e. 5 ms.
- Ch_{dig} = the number of digital channels recorded.

For example, let us say the nominal frequency is 50 Hz, the selected sample rate is 64 s/c, nine (9) analog channels and two (2) digital channels record. The calculation is as follows:

$$\frac{16\,076\,647 \text{ samples}}{(50 \text{ Hz} * (9+1) * 64) + (200 \text{ Hz} * 2)} \approx 496 \text{ s}$$

Therefore, the maximum recording length in our example is approximately 496 seconds.

Application example

This chapter presents an application example of how to set the disturbance recorder and analyze its output. The recorder is configured by using the setting tool software or device HMI, and the results are analyzed with the AQviewer software (is automatically downloaded and installed with AQtivate). Registered users can download the latest tools from the Arcteq website (arcteq.com./downloads/).

In this example, we want the recordings to be made according to the following specifications:

- the recording length is 6.0 s
- the sample rate is 64 s/c (therefore, with a 50 Hz system frequency a sample is taken every 312.5 µs)
- the analog channels 1...8 are used
- digital channels are tracked every 5 ms
- the first activation of the overcurrent stage trip (I> TRIP) triggers the recorder
- the pre-triggering time is 5 (ie. how long is recorded before the I> TRIP signal) and the post-triggering time is 1 s

The image below shows how these settings are placed in the setting tool.

© Arcteq Relays Ltd
IM00014

Figure. 5.6.6 - 240. Disturbance recorder settings.

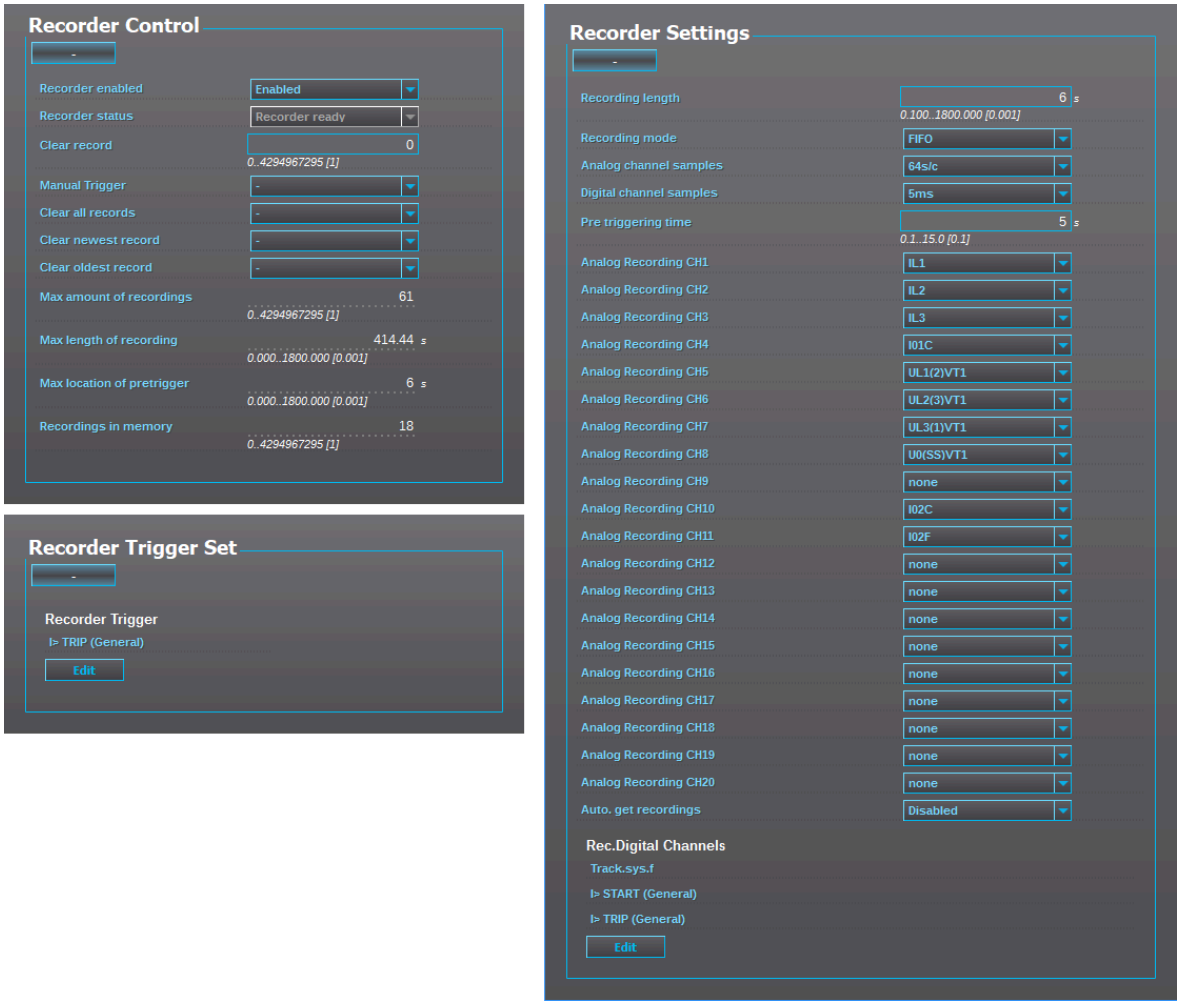

Figure. 5.6.6 - 241. Effects of recording length and pre-triggering time signals. This example is based on the settings shown above.

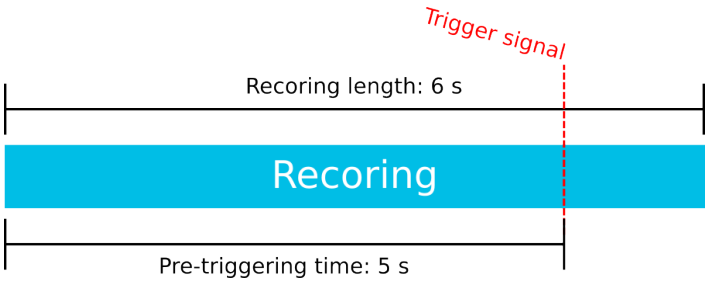

When there is at least one recording in the device's memory, that recording can be analyzed by using the AQviewer software (see the image below). However, the recording must first be made accessible to AQViewer. The user can read it from the device's memory (*Disturbance recorder → Get DR-files*). Alternatively, the user can load the recordings individually (*Disturbance recorder → DR List*) from a folder in the PC's hard disk drive; the exact location of the folder is described in *Tools → Settings → DR path*.

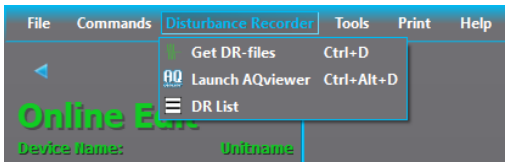

The user can also launch the AQviewer software from the *Disturbance recorder* menu. AQviewer software instructions can be found in AQtivate 200 Instruction manual (arcteq.com./downloads/).

Events

The disturbance recorder function (abbreviated "DR" in event block names) generates events and registers from the status changes in the events listed below. Events cannot be masked off. The events triggered by the function are recorded with a time stamp.

Table. 5.6.6 - 309. Event messages.

Event block name	Event names
DR1	Recorder triggered ON/OFF
DR1	Recorder memory cleared
DR1	Oldest record cleared
DR1	Recorder memory full ON/OFF
DR1	Recording ON/OFF
DR1	Storing recording ON/OFF
DR1	Newest record cleared

5.6.7 Event logger

Event logger records status changes of protection functions, digital inputs, logical signals etc. Events are recorded with a timestamp. The time stamp resolution is 1 ms. Up to 15 000 events can be stored at once. When 15 000 events have been recorded, the event history will begin to remove the oldest events to make room for new events. You can find more information about event masks in the selected function's "Events" tab. Event masks determine what is recorded into the event history; they are configured in each function's individual settings in the *Protection*, *Control* and *Monitoring* menu. Event history is accessible with PC setting tool (*Tools → Events and Logs → Event history*) and from the device HMI if "Events" view has been configured with Carousel designer in PC setting tool.

© Arcteq Relays Ltd
IM00014

5.6.8 Measurement recorder

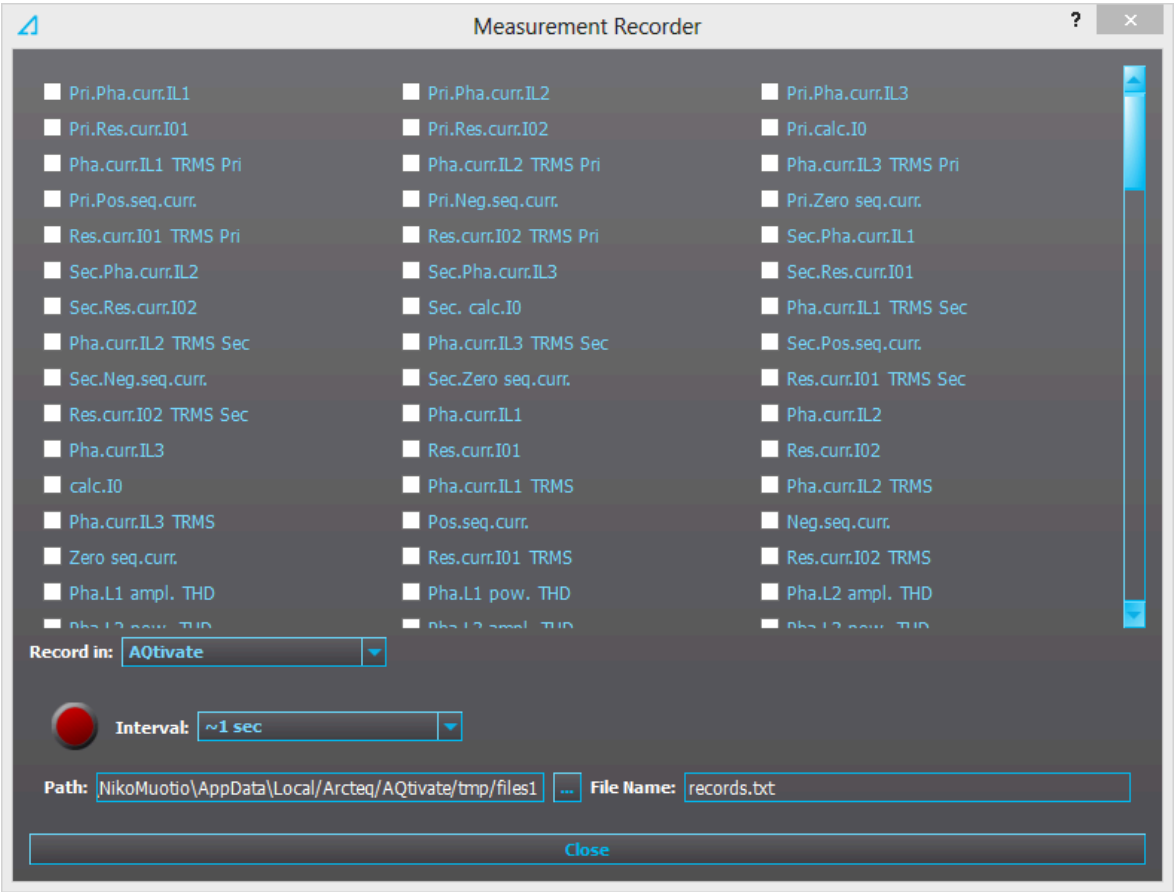

Measurements can be recorded to a file with the measurement recorder. The chosen measurements are recorded at selected intervals. In the "Measurement recorder" window, the measurements the user wants to be recorded can be selected by checking their respective check boxes. In order for the measurement recorder to activate, a connection to a device must be established via the setting tool software and its Live Edit mode must be enabled (see the AQtivate 200 manual for more information). Navigate to the measurement recorder through *Tools → Miscellaneous tools → Measurement recorder*. The recording interval can be changed from the "Interval" drop-down menu. From the "Record in" drop-down menu the user can also choose whether the measurements are recorded in the setting tool or in the device.

If the recording is done in the setting tool, both the setting tool software and its Live Edit mode have to be activated. The user can change the recording file location by editing the "Path" field. File names can also be changed with the "File name" field. Hitting the "Record" button (the big red circle) starts the recorder. Please note that closing the "Measurement recorder" window does not stop the recording; that can only be done by hitting the "Stop" button (the big blue circle).

5.6.9 Fault register

The fault register function records the value of the selected magnitudes at the time of a pre-defined trigger signal. A typical application is the recording of fault currents or voltages at the time of the breaker trips; it can also be used to record the values from any trigger signal set by the user. The user can select whether the function records per-unit values or primary values. Additionally, the user can set the function to record overcurrent fault types or voltage fault types. The function operates instantly from the trigger signal.

The fault register function has an integrated fault display which shows the current fault values when the tripped by one of the following functions:

- I> (non-directional overcurrent)
- I2> (current unbalance)
- Idir> (directional overcurrent)
- I0> (non-directional earth fault)
- I0dir> (directional earth fault)
- f<(underfrequency)
- f> (overfrequency)
- U< (undervoltage)
- U> (overvoltage)
- U1/U2 >/< (sequence voltage)
- U0> (residual voltage)
- P> (over power)
- P< (under power)
- Prev> (reverse power)
- T> (thermal overload)

When any of these functions trip, the fault values and the fault type are displayed in the Mimic view. The view can be enabled by activating the "VREC Trigger on"setting (*Tools → Events and logs → Set alarm events*). The resetting of the fault values is done by the input selected in the *General* menu.

Function keeps 12 latest recordings in memory. Recordings can be viewed in the HMI if "Fault registers" view has been added with "Carousel designer" tool.

Figure. 5.6.9 - 242. 12 latest recordings can be accessed from HMI if "Fault registers" view has been enabled in "Carousel designer" tool.

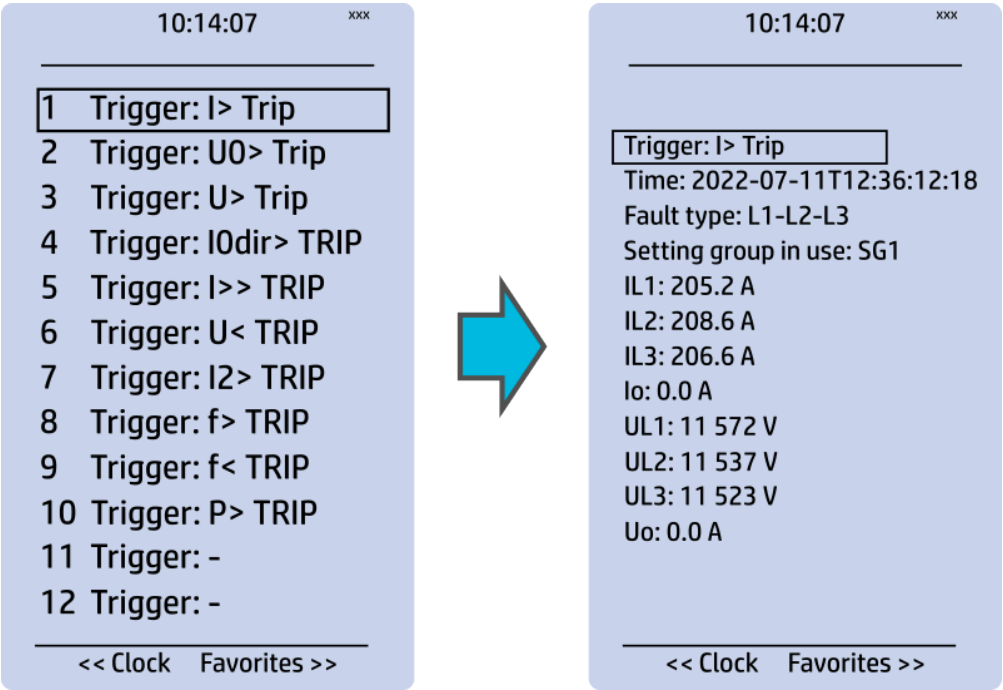

Measured input

The function block uses analog current and voltage measurement values. Based on these values, the device calculates the primary and secondary values of currents, voltages, powers, and impedances as well as other values.

The user can set up to eight (8) magnitudes to be recorded when the function is triggered. An overcurrent fault type, a voltage fault type, and a tripped stage can be recorded and reported straight to SCADA.

© Arcteq Relays Ltd
IM00014

NOTICE!
The available measurement values depend on the device type. If only current analog measurements are available, the recorder can solely use signals which only use current. The same applies, if only voltage analog measurements are available.

Table. 5.6.9 - 310. Current based measurements available.

Currents	Description
IL1 (ff), IL2 (ff), IL3 (ff), I01 (ff), I02 (ff)	The fundamental frequency current measurement values (RMS) of phase currents and of residual currents.
IL1TRMS, IL2TRMS, IL3TRMS, I01TRMS, I02TRMS	The TRMS current measurement values of phase currents and of residual currents.
IL1,2,3 & I01/I02 2nd h., 3rd h., 4th h., 5th h., 7th h., 9th h., 11th h., 13th h., 15th h., 17th h., 19th h.	The magnitudes of phase current components: Fundamental, 2nd harmonic, 3rd harmonic, 4th harmonic, 5th harmonic 7th, harmonic 9th, harmonic 11th, harmonic 13th, harmonic 15th, harmonic 17th, harmonic 19th harmonic current.
I1, I2, I0Z	The positive sequence current, the negative sequence current and the zero sequence current.
I0CalcMag	The residual current calculated from phase currents.
IL1Ang, IL2Ang, IL3Ang, I01Ang, I02Ang, I0CalcAng, I1Ang, I2Ang	The angles of each measured current.

Table. 5.6.9 - 311. Voltage based measurements available.

Voltages	Description
UL1Mag, UL2Mag, UL3Mag, UL12Mag, UL23Mag, UL31Mag U0Mag, U0CalcMag	The magnitudes of phase voltages, of phase-to-phase voltages, and of residual voltages.
U1 Pos.seq V mag, U2 Neg.seq V mag	The positive sequence voltage and the negative sequence voltage.
UL1Ang, UL2Ang, UL3Ang, UL12Ang, UL23Ang, UL31Ang U0Ang, U0CalcAng	The angles of phase voltages, of phase-to-phase voltages, and of residual voltages.
U1 Pos.seq V Ang, U2 Neg.seq V Ang	The positive sequence angle and the negative sequence angle.

Table. 5.6.9 - 312. Power based measurements available.

Powers	Description
S3PH, P3PH, Q3PH	The three-phase apparent, active and reactive powers.
SL1, SL2, SL3, PL1, PL2, PL3, QL1, QL2, QL3	The phase apparent, active and reactive powers.
tanfi3PH, tanfiL1, tanfiL2, tanfiL3	The tan (φ) of three-phase powers and phase powers.

cosfi3PH, cosfiL1, cosfiL2, cosfiL3	The cos (φ) of three-phase powers and phase powers.

Table. 5.6.9 - 313. Impedance and admittance based measurements available.

Impedances and admittances	Description
RL12, RL23, RL31 XL12, XL23, XL31, RL1, RL2, RL3 XL1, XL2, XL3 Z12, Z23, Z31 ZL1, ZL2, ZL3	The phase-to-phase and phase-to-neutral resistances, reactances and impedances.
Z12Ang, Z23Ang, Z31Ang, ZL1Ang, ZL2Ang, ZL3Ang	The phase-to-phase and phase-to-neutral impedance angles.
Rseq, Xseq, Zseq RseqAng, XseqAng, ZseqAng	The positive sequence resistance, reactance and impedance values and angles.
GL1, GL2, GL3, G0 BL1, BL2, BL3, B0 YL1, YL2, YL3, Y0	The conductances, susceptances and admittances.
YL1angle, YL2angle, YL3angle Y0angle	The admittance angles.

Table. 5.6.9 - 314. Other measurements available.

Others	Description
System f.	The tracking frequency in use at that moment.
Ref f1	The reference frequency 1.
Ref f2	The reference frequency 2.
M thermal T	The motor thermal temperature.
F thermal T	The feeder thermal temperature.
T thermal T	The transformer thermal temperature.
RTD meas 1…16	The RTD measurement channels 1…16.
Ext RTD meas 1…8	The external RTD measurement channels 1…8 (ADAM module).

Reported values

When triggered, the function holds the recorded values of up to eight channels, as set. In addition to this tripped stage, the overcurrent fault type and the voltage fault types are reported to SCADA.

© Arcteq Relays Ltd
IM00014

Table. 5.6.9 - 315. Reported values.

Name	Range	Description
Tripped stage	• - • I> Trip • I>> Trip • I>>> Trip • I>>>> Trip • IDir> Trip • IDir>> Trip • IDir>>> Trip • IDir>>>> Trip • U> Trip • U>> Trip • U>>> Trip • U>>>> Trip • U< Trip • U<< Trip • U<<< Trip • U<<<< Trip • I0> TRIP • I0>> Trip • I0>>> Trip • I0>>>> Trip • I0Dir> Trip • I0Dir>> Trip • I0Dir>>> Trip • I0Dir>>>> Trip • f> Trip • f>> Trip • f>>> Trip • f>>>> Trip • f< Trip • f<< Trip • f<<< Trip • f<<<< Trip • P> Trip • P< Trip • Prev> Trip • T> Trip • I2> Trip • I2>> Trip • I2>>> Trip • I2>>>> Trip • U1/2 > Trip • U1/2 >> Trip • U1/2 >>> Trip • U1/2 >>>> Trip • U0> Trip • U0>> Trip • U0>>> Trip • U0>>>> Trip	The tripped stage.
Overcurrent fault type	• A-G • B-G • A-B • C-G • A-C • B-C • A-B-C	The overcurrent fault type.

Name	Range	Description
Voltage fault type	• A(AB) • B(BC) • A-B(AB-BC) • C(CA) • A-C(AB-CA) • B-C(BC-CA) • A-B-C • Overfrequency • Underfrequency • Overpower • Underpower • Reversepower • Thermal overload • Unbalance • Harmonic overcurrent • Residual overvoltage	The voltage fault type.
Magnitude 1…8	0.000…1800.000 A/V/p.u.	The recorded value in one of the eight channels.

Events

The fault register function (abbreviated "VREC" in event block names) generates events from the status changes in the events listed below. The user can select which event messages are stored in the main event buffer: ON, OFF, or both. The events triggered by the function are recorded with a time stamp.

Table. 5.6.9 - 316. Event messages.

Event block name	Event name
VREC1	Recorder triggered ON/OFF

© Arcteq Relays Ltd
IM00014

5.6.10 Device diagnostics

Table. 5.6.10 - 317. Device diagnostics section parameters.

Name	Range	Step	Description
Diagnostic alarm status	• Temp. out of range • Voltage out of range • HW configuration invalid • Relay output failure • Option card A…F alarm • Option card A…J alarm • • GOOSE invalid • • • • • •	-	Displays the status of the diagnostic alarm.
Clear diagnostic alarm	• - • Clear	-	Clears the diagnostic alarms.
Protection constants calculated	• Not calculated • Calculated	-	Indicates whether or not protection constants are calculated.
Internal temperature	0.0…200.0 ºC	0.1 ºC	Displays the internal temperature of the device.
Internal voltage 24 V	0.0…50.0 V	0.1 V	Displays the internal voltage of the device: the nominal, the maximum, the minimum, and the deviation.
Internal voltage 24 V max	0.0…50.0 V	0.1 V	Measured internal voltage.
Internal voltage 24 V min	0.0…50.0 V	0.1 V	Minimum recorded internal voltage.
Internal voltage 24 V deviation	0.0…50.0 V	0.1 V	Maximum recorded internal voltage.
System full reset	• - • Reset	-	Resets the whole system of the device.
Protections reset	• - • Reset	-	Resets the protection system.
Communication system full reset	• - • Reset	-	Resets the communication system.

Name	Range	Step	Description
Reset is pending	0.0…60.0 s	0.1 s	When a full system reset or a protection system reset command has been given, a countdown starts. When the countdown reaches zero, the device resets.
Baseboard card revision	$0…2^{32} – 1$	1	Displays the revision of baseboard card.
Baseboard card serial number	0×0…0×FFFFFFFF	0×1	Displays the serial number of the baseboard card.
CPU serial number	0×0…0×FFFFFFFF	0×1	Displays the serial number of the device's CPU. You can have up to four (4) CPUs; the serial number of each is displayed on its own row.
Slot x card type	• Reserved • Display • Current measurement • Voltage measurement • Digital input • Output relay • Arc • Communication • mA output • mA input • RTD input • Low energy analog • Digital input • U0 measurement • LC Ethernet • RJ 45 Ethernet • ST Ethernet	-	Displays the card type of the selected slot (A...F). Displays the card type of the selected slot (A...J).
Slot x card revision	$0…2^{32} – 1$	1	Displays the card revision of the selected slot (A...F). Displays the card revision of the selected slot (A...J).
Slot x card serial number	0×0…0×FFFFFFFF	0×1	Displays the card serial number of the selected slot (A...F). Displays the card serial number of the selected slot (A...J).

© Arcteq Relays Ltd

Name	Range	Step	Description
Internal relay fault status	• Storage error • Logic file missing • Acquisition unit error • Measurement config error • Relay hardware setup error • System overload error • Not configured yet • Firmware upgrade done • Slot supervision error • Software inconsistency error • Safe setting mode active	-	Displays the internal relay fault status of the device.
Clear fault status	• - • Clear	-	Clears the (internal relay fault status.
Option card health status	• Baseboard fault • Card slot A…F fault	-	Indicates if a fault on any of the cards has been detected
Logic state	• Setup • Stopped • Running • Error	-	Indicates the status of logic.
Gates usage	0.0…100.0 %	0.1 %	Displays the amount of available logic gates used in percentage value.
Wires usage	0.0…100.0 %	0.1 %	Displays the amount of logic wires used in percentage value.

6 Communication

6.1 Connections menu

"Connections" menu is found under "Communication" menu. It contains all basic settings of ethernet port and RS-485 serial port included with every AQ-200 device as well as settings of communication option cards.

Table. 6.1 - 318. Ethernet settings.

Name	Range	Description
IP address	0.0.0.0...255.255.255.255	Set IP address of the ethernet port in the back of the AQ-200 series device.
Netmask	0.0.0.0...255.255.255.255	Set netmask of the ethernet port in the back of the AQ-200 series device.
Gateway	0.0.0.0...255.255.255.255	Set gateway of the ethernet port in the back of the AQ-200 series device.
MAC-Address	00-00-00-00-00-00...FF-FF-FF-FF-FF-FF	Indication of MAC address of the AQ-200 series device.
Storm Protection	• Disable • Enable	When enabled, the Storm protection functionality of the internal switch in the device is enabled. This functionality aims to protect the device from excess ethernet traffic caused by storm situation. When enabled, the packet rate allowed to pass through on the ingress port towards the device, is limited to 150 packets per second. Multicast packets are also included in the packet limit.
Double Ethernet card mode	• Switch • HSR • PRP	If the device has a double ethernet option card it is possible to choose its mode.
COM A and Ethernet option card connection	• Block all • Allow both directions • Allow COM A to option card • Allow option card to COM A	If the device has ethernet option card it is possible to determine the allowed direction of data.
Double Ethernet link events	• Disable • Enable	Disables or enables "Double Ethernet Link A down" and "Double Ethernet Link B down" logic signals and events.
Double Ethernet PRP ports	• AB • BA	LanA and LanB port assigment for communication cards that support PRP.

Virtual Ethernet enables the device to be connected to multiple different networks simultaneously via one physical Ethernet connection. Virtual Ethernet has its own separate IP address and network configurations. All Ethernet-based protocol servers listen for client connections on the IP addresses of both the physical Ethernet and the Virtual Ethernet.

© Arcteq Relays Ltd
IM00014

Table. 6.1 - 319. Virtual Ethernet settings.

Name	Description
Enable virtual adapter (No / Yes)	Enable virtual adapter. Off by default.
IP address	Set IP address of the virtual adapter.
Netmask	Set netmask of the virtual adapter.
Gateway	Set gateway of the virtual adapter.

AQ-200 series devices are always equipped with an RS-485 serial port. In the software it is identified as "Serial COM1" port.

Table. 6.1 - 320. Serial COM1 settings.

Name	Range	Description
Bitrate	• 9600bps • 19200bps • 38400bps	Bitrate used by RS-485 port.
Databits	7...8	Databits used by RS-485 port.
Parity	• None • Even • Odd	Paritybits used by RS-485 port.
Stopbits	1...2	Stopbits used by RS-485 port.
Protocol	• None • ModbutRTU • ModbusIO • IEC103 • SPA • DNP3 • IEC101	Communication protocol used by RS-485 port.

AQ-200 series supports communication option card type that has serial fiber ports (Serial COM2) an RS-232 port (Serial COM3).

Table. 6.1 - 321. Serial COM2 settings.

Name	Range	Description
Bitrate	• 9600bps • 19200bps • 38400bps	Bitrate used by serial fiber channels.
Databits	7...8	Databits used by serial fiber channels.
Parity	• None • Even • Odd	Paritybits used by serial fiber channels.
Stopbits	1...2	Stopbits used by serial fiber channels.

Name	Range	Description
Protocol	• None • ModbutRTU • ModbusIO • IEC103 • SPA • DNP3 • IEC101	Communication protocol used by serial fiber channels.
Echo	• Off • On	Enable or disable echo.
Idle Light	• Off • On	Idle light behaviour.

Table. 6.1 - 322. Serial COM3 settings.

Name	Range	Description
Bitrate	• 9600bps • 19200bps • 38400bps	Bitrate used by RS-232 port.
Databits	7...8	Databits used by RS-232 port.
Parity	• None • Even • Odd	Paritybits used by RS-232 port.
Stopbits	1...2	Stopbits used by RS-232 port.
Protocol	• None • ModbutRTU • ModbusIO • IEC103 • SPA • DNP3 • IEC101	Communication protocol used by RS-232 port.

6.2 Time synchronization

Time synchronization source can be selected with "Time synchronization" parameter in the "General" menu.

Table. 6.2 - 323. General time synchronization source settings.

Name	Range	Description
Time synchronization source	• Internal • External NTP • External serial • IRIG-B •	Selection of time synchronization source.

© Arcteq Relays Ltd
IM00014

6.2.1 Internal

If no external time synchronization source is available the mode should be set to "internal". This means that the AQ-200 device clock runs completely on its own. Time can be set to the device with AQtivate setting tool with *Commands → Sync Time* command or in the clock view from the HMI. When using *Sync time* command AQtivate sets the time to device the connected computer is currently using. Please note that the clock doesn't run when the device is powered off.

6.2.2 NTP

When enabled, the NTP (Network Time Protocol) service can use external time sources to synchronize the device's system time. The NTP client service uses an Ethernet connection to connect to the NTP time server. NTP can be enabled by setting the primary time server and the secondary time server parameters to the address of the system's NTP time source(s).

Table. 6.2.2 - 324. Server settings.

Name	Range	Description
Primary time server address	0.0.0.0...255.255.255.255	Defines the address of the primary NTP server. Setting this parameter at "0.0.0.0" means that the server is not in use.
Secondary time server address	0.0.0.0...255.255.255.255	Defines the address of the secondary (or backup) NTP server. Setting this parameter at "0.0.0.0" means that the server is not in use.

Table. 6.2.2 - 325. Client settings.

Name	Range	Description
IP address	0.0.0.0...255.255.255.255	Defines the address of the NTP client. NOTE: This address must be different than the general IP address of the device.
Netmask	0.0.0.0...255.255.255.255	Defines the client's netmask.
Gateway	0.0.0.0...255.255.255.255	Defines the client's gateway.
MAC address	00-00-00-00-00-00...FF-FF-FF-FF-FF-FF	Displays the MAC address of the client.
Network status	• Running • IP error • NM error • GW error	Displays the status or possible errors of the NTP (client) settings.

Table. 6.2.2 - 326. Status.

Name	Range	Description
NTP quality for events	• No sync • Synchronized	Displays the status of the NTP time synchronization at the moment. NOTE: This indication is not valid if another time synchronization method is used (external serial).

Name	Range	Description
NTP-processed message count	0...4294967295	Displays the number of messages processed by the NTP protocol.

NOTICE!
A unique IP address must be reserved for the NTP client. The device's IP address cannot be used.

Additionally, the time zone of the device can be set by connecting to the device and the selecting the time zone at *Commands → Set time zone* in AQtivate setting tool.

6.3 Communication protocols

The following chapters will describe all available communication protocols. The device includes an RJ-45 ethernet port and an RS-485 serial port, which are able to use communication protocols. See other options for communication ports under "Construction and installation".

NOTICE!
Only one communication protocol can be used at a time by an AQ-210 device!

6.3.1 IEC 61850

The user can enable the IEC 61850 protocol in device models that support this protocol at *Communication → Protocols → IEC61850*. AQ-21x frame units support Edition 1 of IEC 61850. AQ-25x frame units support both Edition 1 and 2 of IEC 61850. The following services are supported by IEC 61850 in Arcteq devices:

- Up to eight (8) data sets
- Report Control Blocks (both buffered and unbuffered reporting)
- Control ('Direct operate with normal security', 'Select before operate with normal security, 'Direct with enhanced security' and 'Select before operate with enhanced sequrity' control sequences)
- Disturbance recording file transfer
- GOOSE
- Time synchronization

The device's current IEC 61850 setup can be viewed and edited with the IEC61850 tool (*Tools → Communication → IEC 61850*).

Settings

The general setting parameters for the IEC 61850 protocol are visible both in AQtivate and in the local HMI. The settings are described in the table below.

Table. 6.3.1 - 327. General settings.

Name	Range	Step	Default	Description
Enable IEC 61850	• Disabled • Enabled	-	Disabled	Enables and disables the IEC 61850 communication protocol.
Reconfigure IEC 61850	• - • Reconfigure	-	-	Reconfigures IEC 61850 settings.

© Arcteq Relays Ltd
IM00014

Name	Range	Step	Default	Description
IP port	0…65 535	1	102	Defines the IP port used by the IEC 61850 protocol. The standard (and default) port is 102.
Control Authority switch	• Remote Control • Station Level Control	-	Remote Control	The device can be set to allow object control via IEC 61850 only from clients that are of category Station level control. This would mean that other Remote control clients would not be allowed to control. In Remote control mode all IEC 61850 clients of both remote and station level category are allowed to control objects.
Ethernet port	• All • COM A • Double ethernet card	-	All	Determines which ports use IEC61850. Parameter is visible if double ethernet option card is found in the device.
General deadband	0.1…10.0 %	0.1 %	2 %	Determines the general data reporting deadband settings.
Active energy deadband	0.1…1000.0 kWh	0.1 kWh	2 kWh	Determines the data reporting deadband settings for this measurement.
Reactive energy deadband	0.1…1000.0 kVar	0.1 kVar	2 kVar	Determines the data reporting deadband settings for this measurement.
Active power deadband	0.1…1000.0 kW	0.1 kW	2 kW	Determines the data reporting deadband settings for this measurement.
Reactive power deadband	0.1…1000.0 kVar	0.1 kVar	2 kVar	Determines the data reporting deadband settings for this measurement.
Apparent power deadband	0.1…1000.0 kVA	0.1 kVA	2 kVA	Determines the data reporting deadband settings for this measurement.
Power factor deadband	0.01…0.99	0.01	0.05	Determines the data reporting deadband settings for this measurement.
Frequency deadband	0.01…1.00 Hz	0.01 Hz	0.1 Hz	Determines the data reporting deadband settings for this measurement.
Current deadband	0.01…50.00 A	0.01 A	5 A	Determines the data reporting deadband settings for this measurement.
Residual current deadband	0.01…50.00 A	0.01 A	0.2 A	Determines the data reporting deadband settings for this measurement.
Voltage deadband	0.01…5000.00 V	0.01 V	200 V	Determines the data reporting deadband settings for this measurement.
Residual voltage deadband	0.01…5000.00 V	0.01 V	200 V	Determines the data reporting deadband settings for this measurement.
Angle measurement deadband	0.1…5.0 deg	0.1 deg	1 deg	Determines the data reporting deadband settings for this measurement.

Name	Range	Step	Default	Description
Integration time	0…10 000 ms	1 ms	0 ms	Determines the integration time of the protocol. If this parameter is set to "0 ms", no integration time is in use. See chapter "Integration time" for more information.
GOOSE Ethernet port	• All • COM A • Double ethernet card	-	All	Determines which ports can use GOOSE communication. Visible if double ethernet option card is found in the device.

For more information on the IEC 61850 communication protocol support, please refer to the conformance statement documents (www.arcteq.fi/downloads/ → AQ 200 series → Resources).

6.3.1.1 GOOSE

Arcteq devices support both GOOSE publisher and GOOSE subscriber. GOOSE subscriber is enabled with the "GOOSE subscriber enable" parameter at *Communication → Protocols → IEC 61850/GOOSE.* The GOOSE inputs are configured using either the local HMI or the AQtivate software.

There are up to 64 GOOSE inputs available for use. Each of the GOOSE inputs also has a corresponding input quality signal which can also be used in internal logic. The quality is good, when the input quality status is "low" (that is, when the quality is marked as "0"). The value of the input quality can switch on as a result of a GOOSE time-out or a configuration error, for example. The status and quality of the various logical input signals can be viewed at the *GOOSE IN status* and *GOOSE IN quality* tabs at *Control → Device I/O → Logical signals*.

GOOSE input settings

The table below presents the different settings available for all 64 GOOSE inputs.

These settings can be found from *Communication → Protocols → IEC61850*.

Table. 6.3.1.1 - 328. GOOSE input settings.

Name	Range	Description
In use	• No (Default) • Yes	Enables and disables the GOOSE input in question.
Application ID ("AppID")	0×0…0×3FFF	Defines the application ID that will be matched with the publisher's GOOSE control block.
Configuration revision ("ConfRev")	$1…2^{32}-1$	Defines the configuration revision that will be matched with the publisher's GOOSE control block.
Data index ("DataIdx")	0…99	Defines the data index of the value in the matched published frame. It is the status of the GOOSE input.
NextIdx is quality	• No (Default) • Yes	Selects whether or not the next received input is the quality bit of the GOOSE input.

© Arcteq Relays Ltd
IM00014

GOOSE input descriptions

Each of the GOOSE inputs can be given a description. The user defined description are displayed in most of the menus:

- logic editor
- matrix
- block settings
- etc.

These settings can be found from *Control → Device IO → Logical Signals → GOOSE IN Description*.

Table. 6.3.1.1 - 329. GOOSE input user description.

Name	Range	Default	Description
User editable description GI x	1...31 characters	GOOSE IN x	Description of the GOOSE input. This description is used in several menu types for easier identification.

GOOSE events

GOOSE signals generate events from status changes. The user can select which event messages are stored in the main event buffer: ON, OFF, or both. The events triggered by the function are recorded with a time stamp and with process data values. The time stamp resolution is 1 ms.

Table. 6.3.1.1 - 330. GOOSE event

Event block name	Event name	Description
GOOSE1...GOOSE2	GOOSE IN 1...64 ON/OFF	Status change of GOOSE input.
GOOSE3...GOOSE4	GOOSE IN 1...64 quality Bad/Good	Status change of GOOSE inputs quality.

Setting the publisher

The configuration of the GOOSE publisher is done using the IEC 61850 tool in AQtivate (*Tools → Communication → IEC 61850*). Refer to the AQtivate instruction manual for more information on how to set up GOOSE publisher. The manual can be downloaded on the Arcteq website (arcteq.com/downloads).

6.3.2 Modbus TCP and Modbus RTU

The device supports both Modbus TCP and Modbus RTU communication. Modbus TCP uses the Ethernet connection to communicate with Modbus TCP clients. Modbus RTU is a serial protocol that can be selected for the available serial ports.

The user can enable the Modbus TCP protocol at *Communication → Protocols → Modbus TCP*. The user can enable the Modbus RTU protocol at *Communication → Connections*.

The following Modbus function types are supported:

- Read multiple holding registers (function code 3)
- Write single holding register (function code 6)
- Write multiple holding registers (function code 16)
- Read/Write multiple registers (function code 23)

The following data can be accessed using both Modbus TCP and Modbus RTU:

- Device measurements
- Device I/O
- Commands
- Events
- Time

Once the configuration file has been loaded, the user can access the Modbus map of the device via the AQtivate software (*Tools → Communication → Modbus Map*). Please note that holding registers start from 1. Some masters might begin numbering holding register from 0 instead of 1; this will cause an offset of 1 between the device and the master. Modbus map can be edited with Modbus Configurator (*Tools → Communication → Modbus Configurator*).

Table. 6.3.2 - 331. Modbus TCP settings.

Parameter	Range	Description
Enable Modbus TCP	• Disabled • Enabled	Enables and disables the Modbus TCP on the Ethernet port.
IP port	0…65 535	Defines the IP port used by Modbus TCP. The standard port (and the default setting) is 502.
Event read mode	• Get oldest available • Continue previous connection • New events only	Get oldest event possible (Default) Continue with the event idx from previous connection Get only new events from connection time and forward.

Table. 6.3.2 - 332. Modbus RTU settings.

Parameter	Range	Description
Slave address	1…247	Defines the Modbus RTU slave address for the unit.

Reading events

Modbus protocol does not support time-stamped events by standard definition. This means that every vendor must come up with their own definition how to transfer events from the device to the client. In AQ-200 series devices events can be read from HR17...HR22 holding registers. HR17 contains the event-code, HR18...20 contains the time-stamp in UTC, HR21 contains a sequential index and HR22 is reserved for future expansion. See the Modbus Map for more information. The event-codes and their meaning can be found from Event list (*Tools → Events ang Logs → Event list* in setting tool). The event-code in HR17 is 0 if no new events can be found in the device event-buffer. Every time HR17 is read from client the event in event-buffer is consumed and on following read operation the next un-read event information can be found from event registers. HR11…HR16 registers contains a back-up of last read event. This is because some users want to double-check that no events were lost

6.3.3 IEC 103

IEC 103 is the shortened form of the international standard IEC 60870-5-103. The AQ 200 series units are able to run as a secondary (slave) station. The IEC 103 protocol can be selected for the serial ports that are available in the device. A primary (master) station can then communicate with the AQ-200 device and receive information by polling from the slave device. The transfer of disturbance recordings is not supported.

© Arcteq Relays Ltd
IM00014

The user can enable the IEC 103 protocol at *Communication → Connections*.

NOTICE!
Once the configuration file has been loaded, the IEC 103 map of the device can be found in the AQtivate software (*Tools → IEC 103 map*).

Table. 6.3.3 - 333. IEC 103 settings.

Name	Range	Step	Default	Description
Slave address	1…254	1	1	Defines the IEC 103 slave address for the unit.
Measurement interval	0…60 000 ms	1 ms	2000 ms	Defines the interval for the measurements update.

The following table presents the setting parameters for the IEC 103 protocol.

6.3.4 IEC 101/104

The standards IEC 60870-5-101 and IEC 60870-5-104 are closely related. Both are derived from the IEC 60870-5 standard. On the physical layer the IEC 101 protocol uses serial communication whereas the IEC 104 protocol uses Ethernet communication. The IEC 101/104 implementation works as a slave in the unbalanced mode.

For detailed information please refer to the IEC 101/104 interoperability document (arcteq.com/downloads/ → AQ-200 series → Resources → "AQ-200 IEC101 & IEC104 interoperability").

The user can enable the IEC104 protocol at *Communication → Protocols → IEC101/104*. The user can enable the IEC101 protocol at *Communication → Connections*.

IEC 101 settings

Table. 6.3.4 - 334. IEC 101 settings.

Name	Range	Step	Default	Description
Common address of ASDU	0…65 534	1	1	Defines the common address of the application service data unit (ASDU) for the IEC 101 communication protocol.
Common address of ASDU size	1…2	1	2	Defines the size of the common address of ASDU.
Link layer address	0…65 534	1	1	Defines the address for the link layer.
Link layer address size	1…2	1	2	Defines the address size of the link layer.
Information object address size	2…3	1	3	Defines the address size of the information object.
Cause of transmission size	1…2	1	2	Defines the cause of transmission size.

IEC101/104 deadband settings

Table. 6.3.4 - 335. Analog change deadband settings.

Name	Range	Step	Default	Description
General deadband	0.1…10.0%	0.1%	2%	Determines the general data reporting deadband settings.
Active energy deadband	0.1…1000.0kWh	0.1kWh	2kWh	Determines the data reporting deadband settings for this measurement.
Reactive energy deadband	0.1…1000.0kVar	0.1kVar	2kVar	
Active power deadband	0.1…1000.0kW	0.1kW	2kW	
Reactive power deadband	0.1…1000.0kVar	0.1kVar	2kVar	
Apparent power deadband	0.1…1000.0kVA	0.1kVA	2kVA	
Power factor deadband	0.01…0.99	0.01	0.05	
Frequency deadband	0.01…1.00Hz	0.01Hz	0.1Hz	
Current deadband	0.01…50.00A	0.01A	5A	
Residual current deadband	0.01…50.00A	0.01A	0.2A	
Voltage deadband	0.01…5000.00V	0.01V	200V	
Residual voltage deadband	0.01…5000.00V	0.01V	200V	
Angle measurement deadband	0.1…5.0deg	0.1deg	1deg	
mA measurement deadband	0.01…5.00 mA	0.01 mA	0.10 mA	
Integration time	0…10 000ms	1ms	-	Determines the integration time of the protocol. If this parameter is set to "0 ms", no integration time is in use. See the Integration time chapter for more information.

© Arcteq Relays Ltd
IM00014

6.3.5 SPA

The device can act as a SPA slave. SPA can be selected as the communication protocol for the RS-485 port (Serial COM1). When the device has a serial option card, the SPA protocol can also be selected as the communication protocol for the serial fiber (Serial COM2) ports or RS-232 (Serial COM3) port. Please refer to the chapter "Construction and installation" in the device manual to see the connections for these modules.

The data transfer rate of SPA is 9600 bps, but it can also be set to 19 200 bps or 38 400 bps. As a slave the device sends data on demand or by sequenced polling. The available data can be measurements, circuit breaker states, function starts, function trips, etc. The full SPA signal map can be found in AQtivate (*Tools → SPA map*).

The SPA event addresses can be found at *Tools → Events and logs → Event list*.

The user can enable the SPA protocol at *Communication → Connections*.

Table. 6.3.5 - 336. SPA setting parameters.

Name	Range	Description
SPA address	1...899	SPA slave address.
UTC time sync	• Disabled • Enabled	Determines if UTC time is used when synchronizing time. When disabled it is assumed time synchronization uses local time. If enabled it is assumed that UTC time is used. When UTC time is used the timezone must be set at *Commands → Set time zone*.

NOTICE!
To access SPA map and event list, an .aqs configuration file should be downloaded from the device.

6.3.6 DNP3

DNP3 is a protocol standard which is controlled by the DNP Users Group (www.dnp.org). The implementation of a DNP3 slave is compliant with the DNP3 subset (level) 2, but it also contains some functionalities of the higher levels. For detailed information please refer to the DNP3 Device Profile document (www.arcteq.com/downloads/ → AQ-200 series → Resources).

The user can enable the DNP3 TCP protocol at *Communication → Protocols → DNP3*. The user can enable the DNP3 serial protocol at *Communication → Connections*.

General settings

The following table describes the DNP3 setting parameters.

Table. 6.3.6 - 337. Settings.

Name	Range	Step	Default	Description
Enable DNP3 TCP	• Disabled • Enabled	-	Disabled	Enables and disables the DNP3 TCP communication protocol when the Ethernet port is used for DNP3. If a serial port is used, the DNP3 protocol can be enabled from *Communication → DNP3*.

Name	Range	Step	Default	Description
IP port	0…65 535	1	20 000	Defines the IP port used by the protocol.
Slave address	1…65 519	1	1	Defines the DNP3 slave address of the unit.
Master address	1…65 534	1	2	Defines the address for the allowed master.
Link layer time-out	0…60 000ms	1ms	0ms	Defines the length of the time-out for the link layer.
Link layer retries	1…20	1	1	Defines the number of retries for the link layer.
Diagnostic - Error counter	$0…2^{32}$-1	1	-	Counts the total number of errors in received and sent messages.
Diagnostic - Transmitted messages	$0…2^{32}$-1	1	-	Counts the total number of transmitted messages.
Diagnostic - Received messages	$0…2^{32}$-1	1	-	Counts the total number of received messages.

Default variations

Table. 6.3.6 - 338. Default variations.

Name	Range	Default	Description
Group 1 variation (BI)	• Var 1 • Var 2	Var 1	Selects the variation of the binary signal.
Group 2 variation (BI change)	• Var 1 • Var 2	Var 2	Selects the variation of the binary signal change.
Group 3 variation (DBI)	• Var 1 • Var 2	Var 1	Selects the variation of the double point signal.
Group 4 variation (DBI change)	• Var 1 • Var 2	Var 2	Selects the variation of the double point signal.
Group 20 variation (CNTR)	• Var 1 • Var 2 • Var 5 • Var 6	Var 1	Selects the variation of the control signal.
Group 22 variation (CNTR change)	• Var 1 • Var 2 • Var 5 • Var 6	Var 5	Selects the variation of the control signal change.

© Arcteq Relays Ltd
IM00014

Name	Range	Default	Description
Group 30 variation (AI)	• Var 1 • Var 2 • Var 3 • Var 4 • Var 5	Var 5	Selects the variation of the analog signal.
Group 32 variation (AI change)	• Var 1 • Var 2 • Var 3 • Var 4 • Var 5 • Var 7	Var 5	Selects the variation of the analog signal change.

DNP3 deadband settings

Table. 6.3.6 - 339. Analog change deadband settings.

Name	Range	Step	Default	Description
General deadband	0.1…10.0%	0.1%	2%	Determines the general data reporting deadband settings.
Active energy deadband	0.1…1000.0kWh	0.1kWh	2kWh	Determines the data reporting deadband settings for this measurement.
Reactive energy deadband	0.1…1000.0kVar	0.1kVar	2kVar	
Active power deadband	0.1…1000.0kW	0.1kW	2kW	
Reactive power deadband	0.1…1000.0kVar	0.1kVar	2kVar	
Apparent power deadband	0.1…1000.0kVA	0.1kVA	2kVA	
Power factor deadband	0.01…0.99	0.01	0.05	
Frequency deadband	0.01…1.00Hz	0.01Hz	0.1Hz	
Current deadband	0.01…50.00A	0.01A	5A	
Residual current deadband	0.01…50.00A	0.01A	0.2A	
Voltage deadband	0.01…5000.00V	0.01V	200V	
Residual voltage deadband	0.01…5000.00V	0.01V	200V	

Name	Range	Step	Default	Description
Angle measurement deadband	0.1…5.0deg	0.1deg	1deg	
mA deadband	0.01…5.00 mA	0.01 mA	0.10 mA	
Integration time	0…10 000ms	1ms	0ms	Determines the integration time of the protocol. If this parameter is set to "0 ms", no integration time is in use. See chapter "Integration time" for more information.

6.3.7 Modbus I/O

The Modbus I/O protocol can be selected to communicate on the available serial ports. The Modbus I/O is actually a Modbus/RTU master implementation that is dedicated to communicating with serial Modbus/RTU slaves such as RTD input modules. Up to three (3) Modbus/RTU slaves can be connected to the same bus polled by the Modbus I/O implementation. These are named I/O Module A, I/O Module B and I/O Module C. Each of the modules can be configured using parameters in the following two tables.

Table. 6.3.7 - 340. Module settings.

Name	Range	Description
I/O module X address	0…247	Defines the Modbus unit address for the selected I/O Module (A, B, or C). If this setting is set to "0", the selected module is not in use.
Module x type	• ADAM-4018+ • ADAM-4015	Selects the module type.
Channels in use	Channel 0…Channel 7 (or None)	Selects the number of channels to be used by the module.

Table. 6.3.7 - 341. Channel settings.

Name	Range	Step	Default	Description
Thermocouple type	• +/- 20mA • 4…20mA • Type J • Type K • Type T • Type E • Type R • Type S	-	4…20mA	Selects the thermocouple or the mA input connected to the I/O module. Types J, K, T and E are nickel-alloy thermocouples, while Types R and S are platinum/rhodium-alloy thermocouples.
Input value	-101.0…2 000.0	0.1	-	Displays the input value of the selected channel.
Input status	• Invalid • OK	-	-	Displays the input status of the selected channel.

© Arcteq Relays Ltd
IM00014

6.3.8 Integration time

When integration time is not used, measurement values are updated only when the change exceeds the configured deadband. If the deadband is set too low, measurements may be reported too frequently, creating unnecessary traffic. If the deadband is configured too high, the measurement may almost never update. When integration time is used, large changes are still reported quickly, but smaller changes are accumulated over time and eventually reported even if the deadband is not very sensitive.

With integration time enabled, the following parameters determine when a measurement is reported:

- deadband setting of the measurement
- integration time setting
- latest reported measurement value
- measured value.

An integrated value is calculated over time using these parameters. Once this integrated value exceeds the deadband, a new measurement update is sent.

Figure. 6.3.8 - 243. Integration time formula.

$$Integrated\ value = |Measured\ value - Latest\ reported\ value| * \left(\frac{t}{Integration\ time}\right)$$

Figure. 6.3.8 - 244. Example graph showing how integration time affects measurement reporting. Small changes take longer to increase the integrated value over the deadband setting (blue area). Big changes meet the deadband criteria faster (red area).

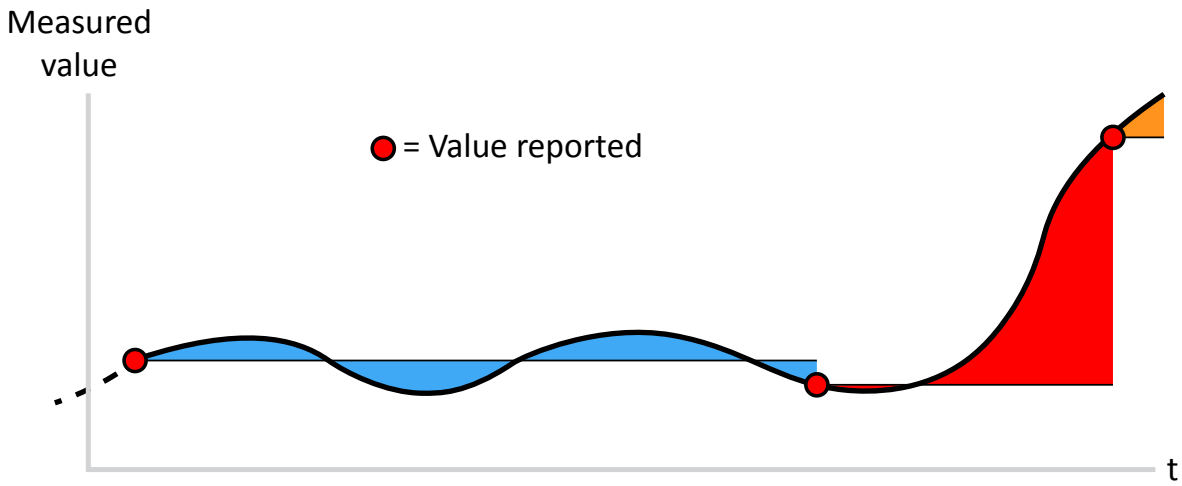

The time it takes for a value to be updated with the configured settings can be roughly estimated with the following formula:

Figure. 6.3.8 - 245. Measurement reporting delay when integration time is used.

$$t = \frac{Deadband\ setting * Integration\ time\ setting}{|Measured\ value - Latest\ reported\ value|}$$

If the latest reported value was 5.00 A and the measurement rises up to 6.00 A and stays stable, and the deadband setting for current is 2 A and the integration time setting is 1 s, we get the following result:

Figure. 6.3.8 - 246. Calculation example for estimating reporting time when integration time is in use.

$$t = \frac{2A * 1s}{|6A - 5A|} = 2s$$

6.4 Analog fault registers

At *Communication → General I/O → Analog fault registers* the user can set up to twelve (12) channels to record the measured value when a protection function starts or trips. These values can be read in two ways: locally from this same menu, or through a communication protocol if one is in use.

The following table presents the setting parameters available for the 12 channels.

Table. 6.4 - 342. Fault register settings.

Name	Range	Step	Default	Description
Select record source	Not in use I>, I>>, I>>>, I>>>> (IL1, IL2, IL3) Id>, Id>>, Id>>>, Id>>>> (IL1, IL2, IL3) I0>, I0>>, I0>>>, I0>>>> (I0) I0d>, I0d>>, I0d>>>, I0d>>>> (I0) FLX (Fault locator)	-	Not in use	Selects the protection function and its stage to be used as the source for the fault register recording. The user can choose between non-directional overcurrent, directional overcurrent, non-directional earth fault, directional earth fault, and fault locator functions.
Select record trigger	• TRIP signal • START signal • START and TRIP signals	-	TRIP signal	Selects what triggers the fault register recording: the selected function's TRIP signal, its START signal, or either one.
Recorded fault value	- 1000 000.00…1 000 000.00	0.01	-	Displays the recorded measurement value at the time of the selected fault register trigger.

6.5 Real-time measurements to communication

With the *Real-time signals to communication* menu the user can report measurements to SCADA in a faster interval. The real measurement update delay depends on the used communication protocol and equipment used. Up to ten (10) magnitudes can be selected. The recorded value can be either a per-unit value or a primary value (set by the user).

Measurable values

Function block uses analog current and voltage measurement values. The device uses these values as the basis when it calculates the primary and secondary values of currents, voltages, powers, impedances and other values.

© Arcteq Relays Ltd
IM00014

Table. 6.5 - 343. Available measured values.

Signals	Description
Currents	
IL1 (ff), IL2 (ff), IL3 (ff), I01 (ff), I02 (ff)	Fundamental frequency (RMS) current measurement values of phase currents and residual currents.
IL1 (TRMS), IL2 (TRMS), IL3 (TRMS), I01 (TRMS), I02 (TRMS)	TRMS current measurement values of phase currents and residual currents.
IL1, IL2, IL3, I01, I02 & 2nd h., 3rd h., 4th h., 5th h., 7th h., 9th h., 11th h., 13th h., 15th h., 17th h., 19th h.	Magnitudes of the phase current components: 2nd harmonic, 3rd harmonic, 4th harmonic, 5th harmonic 7th, harmonic 9th, harmonic 11th, harmonic 13th, harmonic 15th, harmonic 17th, harmonic 19th harmonic current.
I1, I2, I0Z	Positive sequence current, negative sequence current and zero sequence current.
I0CalcMag	Residual current calculated from phase currents.
IL1Ang, IL2Ang, IL3Ang, I01Ang, I02Ang, I0CalcAng I1Ang, I2Ang	Angles of each measured current.
Voltages	
UL1Mag, UL2Mag, UL3Mag, UL12Mag, UL23Mag, UL31Mag, U0Mag, U0CalcMag	Magnitudes of phase voltages, phase-to-phase voltages and residual voltages.
U1 Pos.seq V mag, U2 Neg.seq V mag	Positive and negative sequence voltages.
UL1Ang, UL2Ang, UL3Ang, UL12Ang, UL23Ang, UL31Ang, U0Ang, U0CalcAng	Angles of phase voltages, phase-to-phase voltages and residual voltages.
U1 Pos.seq V Ang, U2 Neg.seq V Ang	Positive and negative sequence angles.
Powers	
S3PH P3PH Q3PH	Three-phase apparent, active and reactive power.
SL1, SL2, SL3, PL1, PL2, PL3, QL1, QL2, QL3	Phase apparent, active and reactive powers.
tanfi3PH tanfiL1 tanfiL2 tanfiL3	Tan (φ) of three-phase powers and phase powers.
cosfi3PH cosfiL1 cosfiL2 cosfiL3	Cos (φ) of three-phase powers and phase powers.
Impedances and admittances	

Signals	Description
RL12, RL23, RL31 XL12, XL23, XL31 RL1, RL2, RL3 XL1, XL2, XL3 Z12, Z23, Z31 ZL1, ZL2, ZL3	Phase-to-phase and phase-to-neutral resistances, reactances and impedances.
Z12Ang, Z23Ang, Z31Ang, ZL1Ang, ZL2Ang, ZL3Ang	Phase-to-phase and phase-to-neutral impedance angles.
Rseq, Xseq, Zseq RseqAng, XseqAng, ZseqAng	Positive sequence resistance, reactance and impedance values and angles.
GL1, GL2, GL3, G0 BL1, BL2, BL3, B0 YL1, YL2, YL3, Y0	Conductances, susceptances and admittances.
YL1angle, YL2angle, YL3angle, Y0angle	Admittance angles.
Others	
System f.	Used tracking frequency at the moment.
Ref f1	Reference frequency 1.
Ref f2	Reference frequency 2.
M thermal T	Motor thermal temperature.
F thermal T	Feeder thermal temperature.
T thermal T	Transformer thermal temperature.
RTD meas 1…16	RTD measurement channels 1…16.
Ext RTD meas 1…8	External RTD measurement channels 1…8 (ADAM module).

Settings

Table. 6.5 - 344. Settings.

Name	Range	Step	Default	Description
Measurement value recorder mode	• Disabled • Activated	-	Disabled	Activates and disables the real-time signals to communication.
Scale current values to primary	• No • Yes	-	No	Selects whether or not values are scaled to primary.
Slot X magnitude selection	• Currents • Voltages • Powers • Impedance (ZRX) and admittance (YGB) • Others	-	Currents	Selects the measured magnitude catecory of the chosen slot.

© Arcteq Relays Ltd
IM00014

Name	Range	Step	Default	Description
Slot X magnitude	Described in table above ("Available measured values")	-	-	Selects the magnituge in the previously selected category.
Magnitude X	-10 000 000.000…10 000 000.000	0.001	-	Displays the measured value of the selected magnitude of the selected slot. The unit depends on the selected magnitude (either amperes, volts, or per-unit values).

7 Connections and application examples

7.1 Connections

7.1.1 Connections of AQ-F215

Figure. 7.1.1 - 247. AQ-F215 application example with function block diagram.

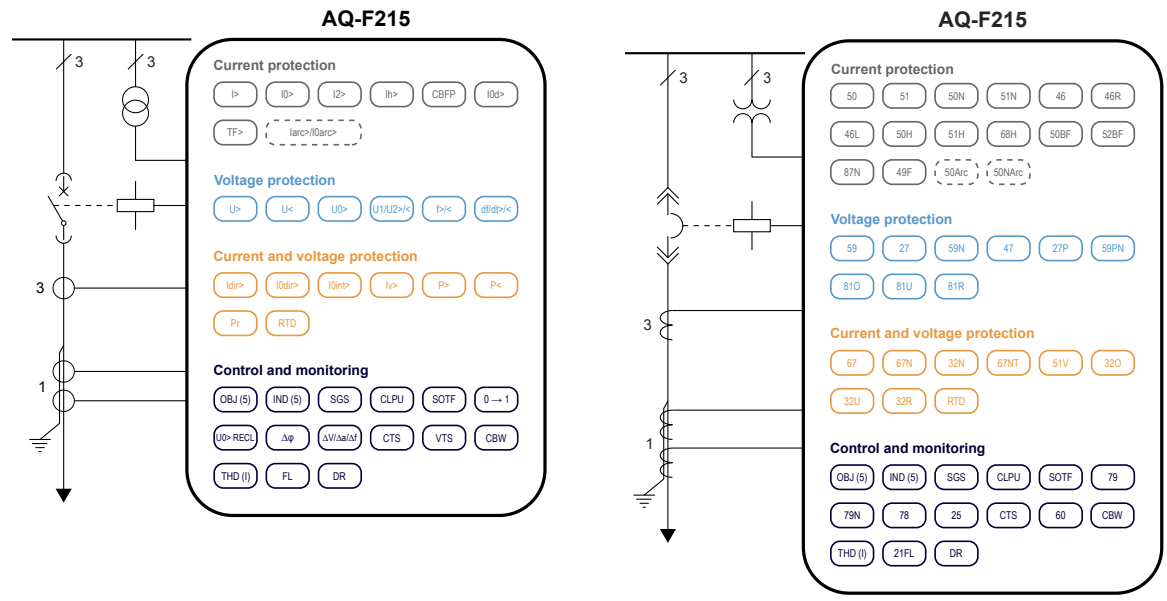

7.2 Applications

7.2.1 Application example and its connections

This chapter presents an application example for the feeder protection relay.

Since three line-to-neutral voltages and the zero sequence voltage (U4) are connected, this application uses the voltage measurement mode "3LN+U0" (see the image below). Additionally, the three phase currents and the residual current (I01) are also connected. The digital inputs are connected to indicate the breaker status, while the digital outputs are used for breaker control.

© Arcteq Relays Ltd
IM00014

Figure. 7.2.1 - 248. Application example and its connections.

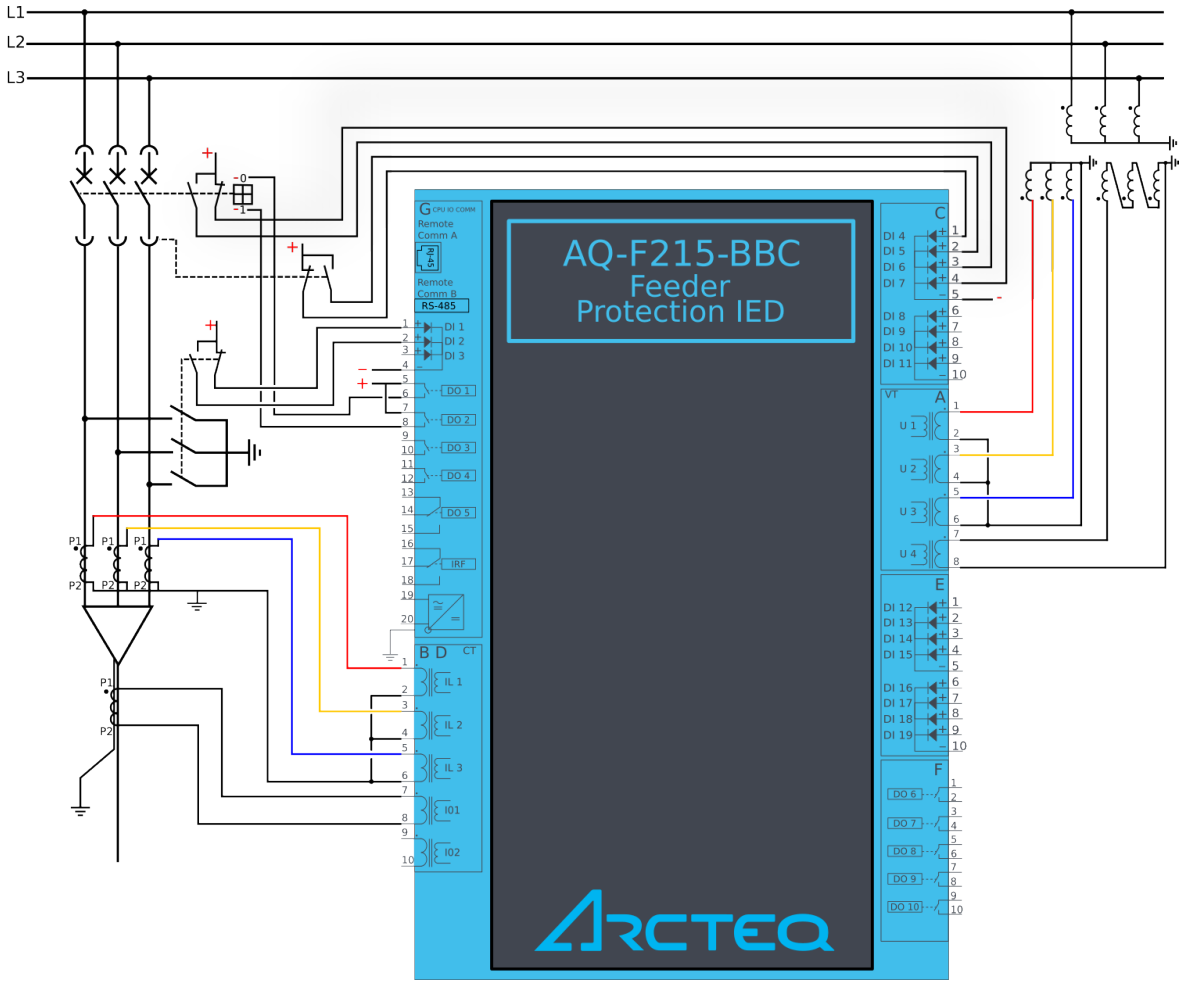

7.2.2 Two-phase, three-wire ARON input connection

This chapter presents the two-phase, three-wire ARON input connection for any AQ-200 series device with a current transformer. The example is for applications with protection CTs for just two phases. The connection is suitable for both motor and feeder applications.

Figure. 7.2.2 - 249. ARON connection.

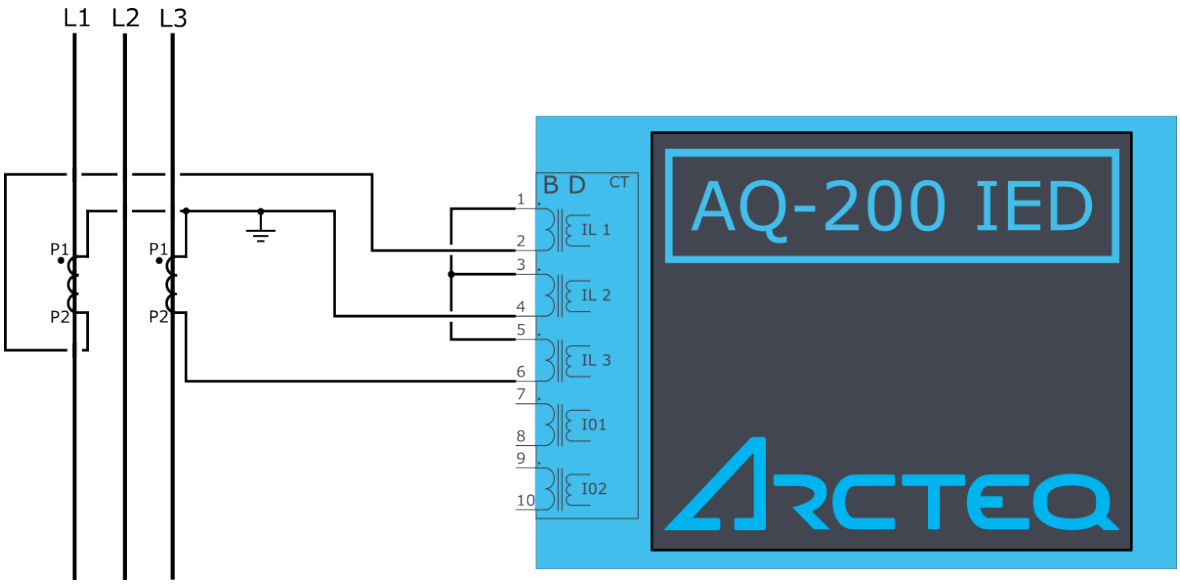

The ARON input connection can measure the load symmetrically despite the fact that one of the CTs is missing from the installation. Normally, Phase 2 does not have a current transformer installed as an external fault is much more likely to appear on Lines 1 or 3.

A fault between Line 2 and the earth cannot be detected when the ARON input connection is used. In order to detect an earth fault in Phase 2, a cable core CT must be used.

7.2.3 Trip circuit supervision (95)

Trip circuit supervision is used to monitor the wiring from auxiliary power supply, through the device's digital output, and all the way to the open coil of the breaker. It is recommended to supervise the health of the trip circuit when breaker is closed.

Trip circuit supervision with one digital input and one non-latched trip output

The figure below presents an application scheme for trip circuit supervision with one digital input and a non-latched trip output. With this connection the current keeps flowing to the open coil of the breaker via the breaker's closing auxiliary contacts (52b) even when the circuit breaker is opened. This requires a resistor which reduces the current: this way the coil is not energized and the relay output does not need to cut off the coil's inductive current.

© Arcteq Relays Ltd
IM00014

Figure. 7.2.3 - 250. Trip circuit supervision with one DI and one non-latched trip output.

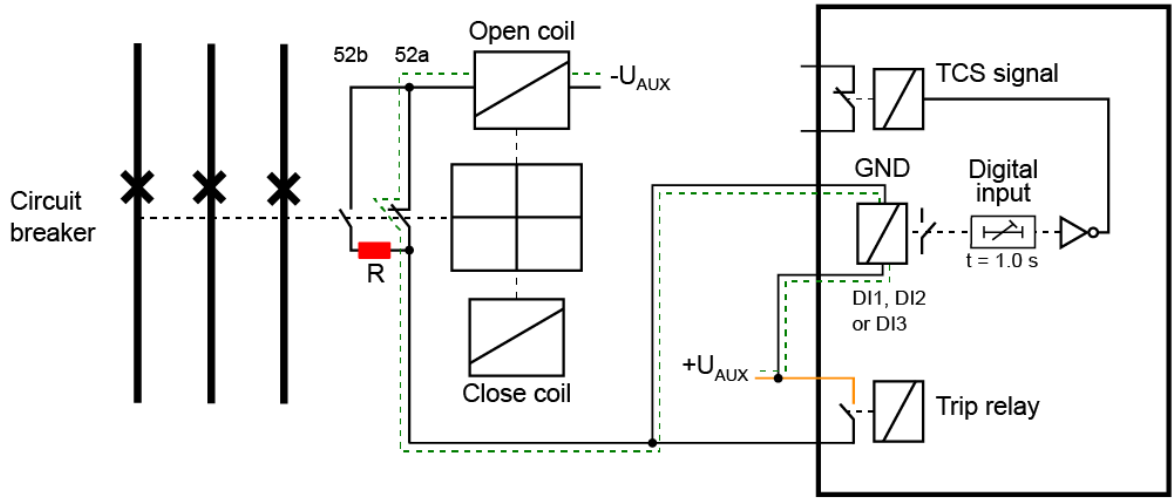

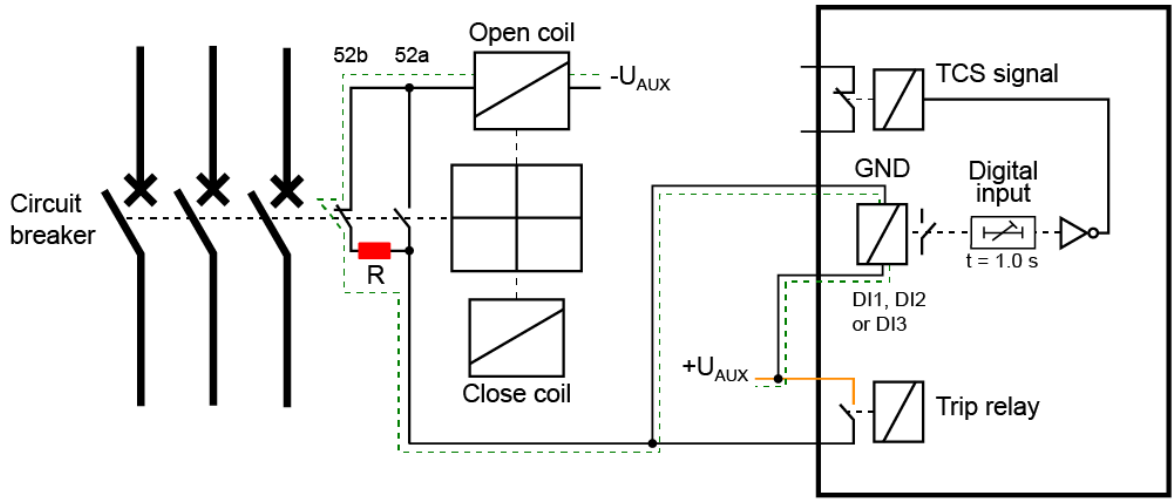

Note that the digital input that monitors the circuit is normally closed, and the same applies to the alarm relay if one is used. For monitoring and especially trip circuit supervision purposes it is recommended to use a normally closed contact to confirm the wiring's condition. An active digital input generates a less than 2 mA current to the circuit, which is usually small enough not to make the breaker's open coil operate.

When the trip relay is controlled and the circuit breaker is opening, the digital input is shorted by the trip contact as long as the breaker is opening. Normally, this takes about 100 ms if the relay is non-latched. A one second activation delay should, therefore, be added to the digital input. An activation delay that is slightly longer than the circuit breaker's operations time should be enough. When circuit breaker failure protection (CBFP) is used, adding its operation time to the digital input activation time is useful. The whole digital input activation time is, therefore, $t_{DI} = t_{CB} + t_{IEDrelease} + t_{CBFP}$.

The image below presents the necessary settings when using a digital input for trip circuit supervision. The input's polarity must be NC (normally closed) and a one second delay is needed to avoid nuisance alarm while the circuit breaker is controlled open.

Figure. 7.2.3 - 251. Settings for a digital input used for trip circuit supervision.

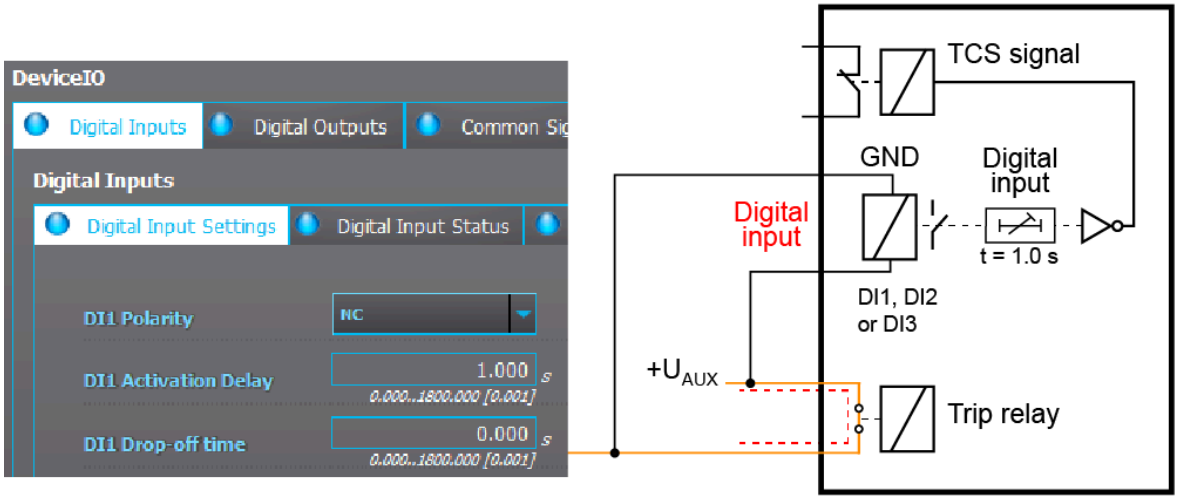

The open coil remains energized only as long as the circuit breaker is opened and the trip relay is open. This takes approximately 100 ms depending on the size and type of the breaker. When the breaker opens, the auxiliary contacts of the circuit breaker open the inductive circuit; however, the trip contact does not open at the same time. The device's output relay contact opens in under 50 ms or after a set release delay that takes place after the breaker is opened. This means that the open coil is energized for a while after the breaker has already opened. The coil could even be energized a moment longer if the circuit breaker failure protection has to be used and the incomer performs the trip.

Trip circuit supervision with one digital input and one connected, non-latched trip output

There is one main difference between non-latched and latched control in trip circuit supervision: when using the latched control, the trip circuit (in an open state) cannot be monitored as the digital input is shorted by the device's trip output.

© Arcteq Relays Ltd
IM00014

Figure. 7.2.3 - 252. Trip circuit supervision with one DI and one latched output contact.

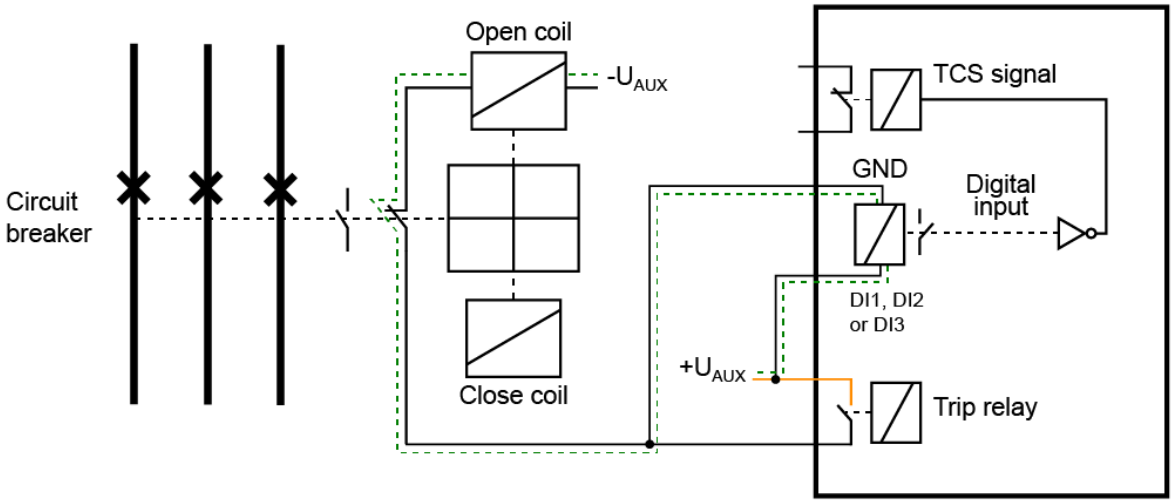

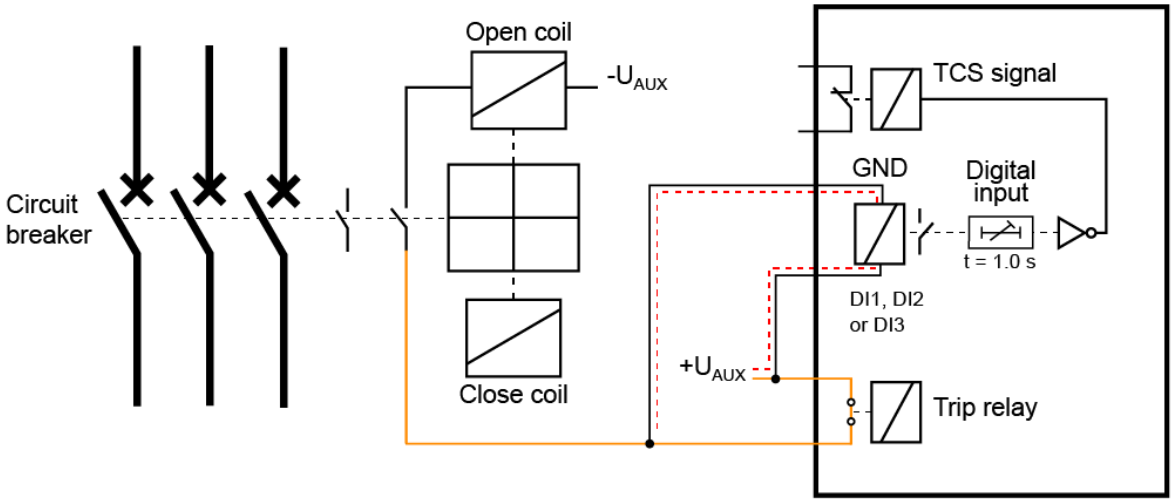

The trip circuit with a latched output contact can be monitored, but only when the circuit breaker's status is "Closed". Whenever the breaker is open, the supervision is blocked by an internal logic scheme. Its disadvantage is that the user does not know whether or not the trip circuit is intact before the breaker is closed again.

The following logic scheme (or similar) blocks the supervision alarm when the circuit breaker is open. The alarm is issued whenever the breaker is closed and whenever the inverted digital input signal ("TCS") activates. A normally closed digital input activates only when there is something wrong with the trip circuit and the auxiliary power goes off. Logical output can be used in the output matrix or in SCADA as the user wants.

The image below presents a block scheme when a non-latched trip output is not used.

Figure. 7.2.3 - 253. Example block scheme.

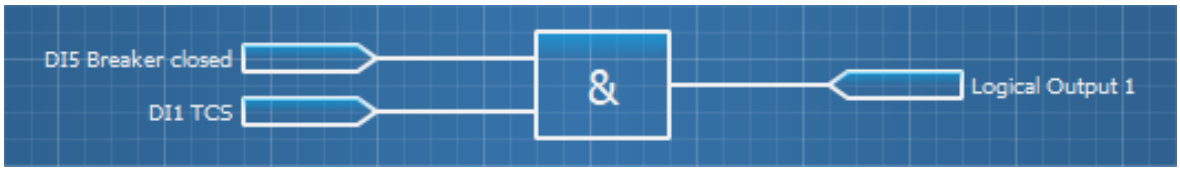

8 Construction and installation

8.1 Construction

AQ-X215 is a member of the modular and scalable AQ-200 series, and it includes three (3) configurable and modular add-on card slots. As a standard configuration the device includes the CPU module (which consists of the CPU, a number of inputs and outputs, and the power supply) as well as one separate voltage measurement module and one separate current measurement module.

The images below present the modules of both the non-optioned model (AQ-X215-XXXXXXX-**AAA**, on the left) and the fully optioned model (AQ-X215-XXXXXXX-**BCD**, on the right).

Figure. 8.1 - 254. Modular construction of AQ-X215.

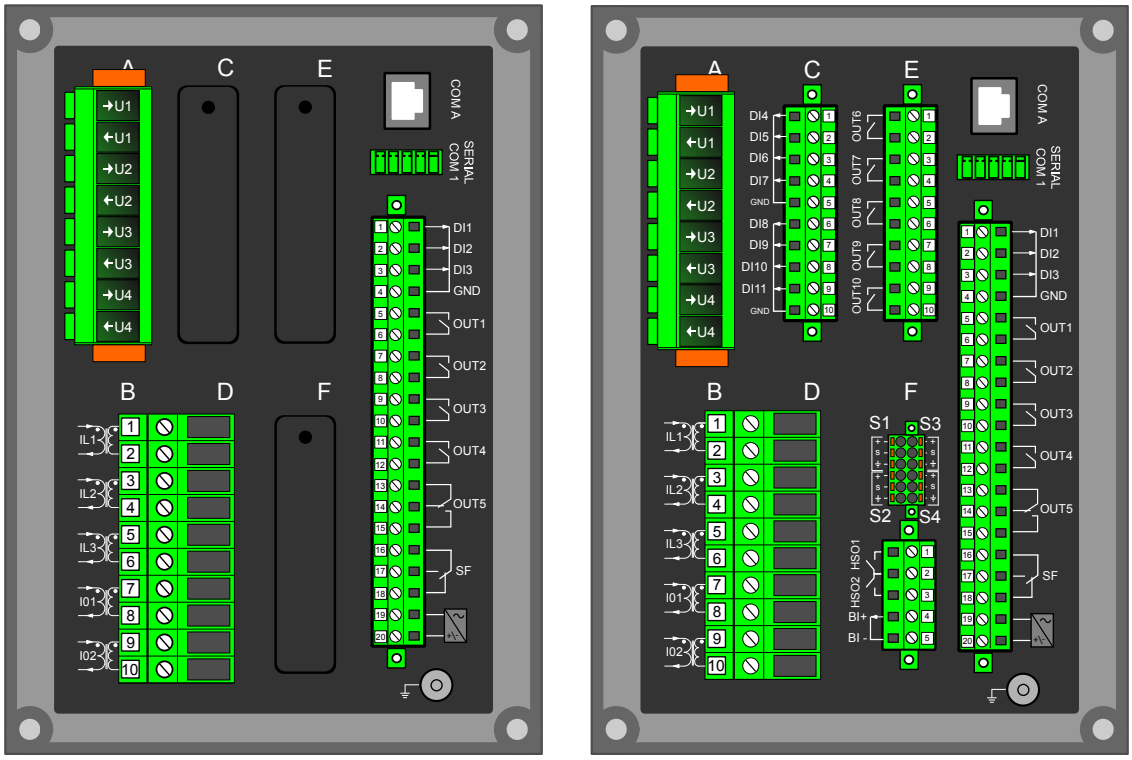

The modular structure of AQ-X215 allows for scalable solutions for different application requirements. In non-standard configurations Slots C, E and F accept all available add-on modules, such as digital I/O modules, integrated arc protection and other special modules. The only difference between the slots affecting device scalability is that Slots E and F also support communication options.

Start-up scan searches for modules according to their type designation code. If the module content is not what the device expects, the device issues a hardware configuration error message. In field upgrades, therefore, add-on modules must be ordered from Arcteq Relays Ltd. or its representative who can then provide the module with its corresponding unlocking code to allow the device to operate correctly once the hardware configuration has been upgraded.

When an I/O module is inserted into the device, the module location affects the naming of the I/O. The I/O scanning order in the start-up sequence is as follows: the CPU module I/O, Slot C, Slot E, and Slot F. This means that the digital input channels DI1, DI2 and DI3 as well as the digital output channels OUT1, OUT2, OUT3, OUT4 and OUT5 are always located in the CPU module. If additional I/O cards are installed, their location and card type affect the I/O naming.

© Arcteq Relays Ltd
IM00014

The figure below presents the start-up hardware scan order of the device as well as the I/O naming principles.

Figure. 8.1 - 255. AQ-X215 hardware scanning and I/O naming principles.

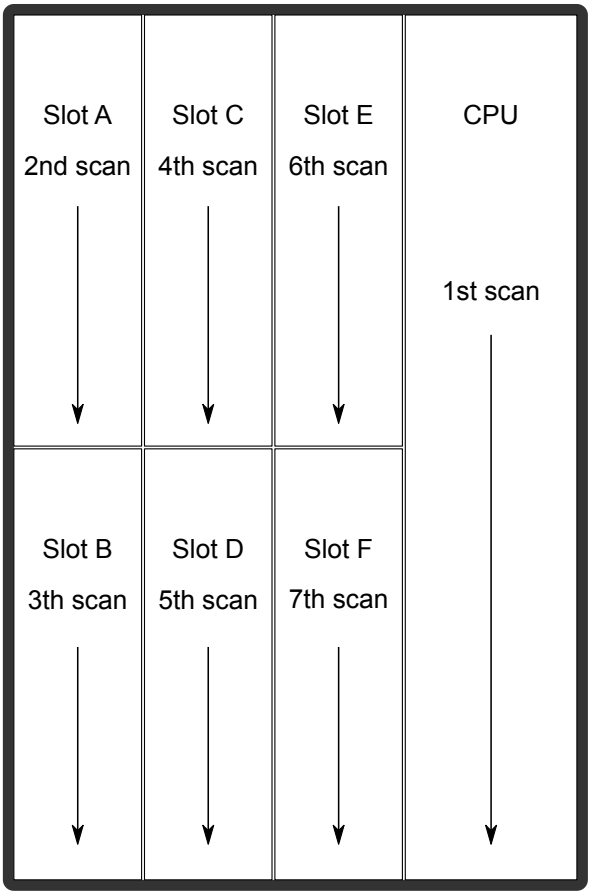

1. Scan
   The start-up system; detects and self-tests the CPU module, voltages, communication and the I/O; finds and assigns "DI1", "DI2", "DI3", "OUT1", "OUT2", "OUT3", "OUT4" and "OUT5".
2. Scan
   Scans Slot A and finds the four channels of the VT module (fixed for AQ-X215). If the VTM is not found, the device issues an alarm.
3. Scan
   Scans Slot B, which should always remain empty in AQ-X215 devices. If it is not empty, the device issues an alarm.
4. Scan
   Scans Slot C, and moves to the next slot if Slot C is empty. If the scan finds an 8DI module (that is, a module with eight digital inputs), it reserves the designations "DI4", "DI5", "DI6", "DI7", "DI8", "DI9", "DI10" and "DI11" to this slot. If the scan finds a DO5 module (that is, a module with five digital outputs), it reserves the designations "OUT6", "OUT7", "OUT8", "OUT9" and "OUT10" to this slot. The I/O is then added if the type designation code (e.g. AQ-P215-PH0AAAA-BBC) matches with the existing modules in the device. If the code and the modules do not match, the device issues and alarm. An alarm is also issued if the device expects to find a module here but does not find one.
5. Scan
   Scans Slot D and finds the five channels of the CT module (fixed for AQ-X215). If the CTM is not found, the device issues an alarm.

6. Scan
   Scans Slot E, and moves to the next slot if Slot E is empty. If the scan finds an 8DI module, it reserves the designations "DI4", "DI5", "DI6", "DI7", "DI8", "DI9", "DI10" and "DI11" to this slot. If Slot C also has an 8DI module (and therefore has already reserved these designations), the device reserves the designations "DI12", "DI13", "DI14", "DI15", "DI16", "DI17", "DI18" and "DI19" to this slot. If the scan finds a 5DO module, it reserves the designations "OUT6", "OUT7", "OUT8", "OUT9" and "OUT10" to this slot. Again, if Slot C also has a 5DO and has therefore already reserved these designations, the device reserves the designations "OUT11", "OUT12", "OUT13", "OUT14" and "OUT15" to this slot.
7. Scan
   A similar operation to Scan 6 (checks which designations have been reserved by modules in previous slots and numbers the new ones accordingly).

The fully optioned example case of AQ-X215-XXXXXXX-BCD (the first image pair, on the right) has a total of 11 digital input channels available: three (DI1…DI3) in the CPU module, and eight (DI4…DI11) in Slot C. It also has a total of 10 digital output channels available: five (DO1…DO5) in the CPU module, and five (DO6…DO10) in Slot E.

8.2 CPU module

Figure. 8.2 - 256. CPU module variants are available with either two or three digital inputs, and can be equipped with standard screw terminals or spring cage terminals for connection.

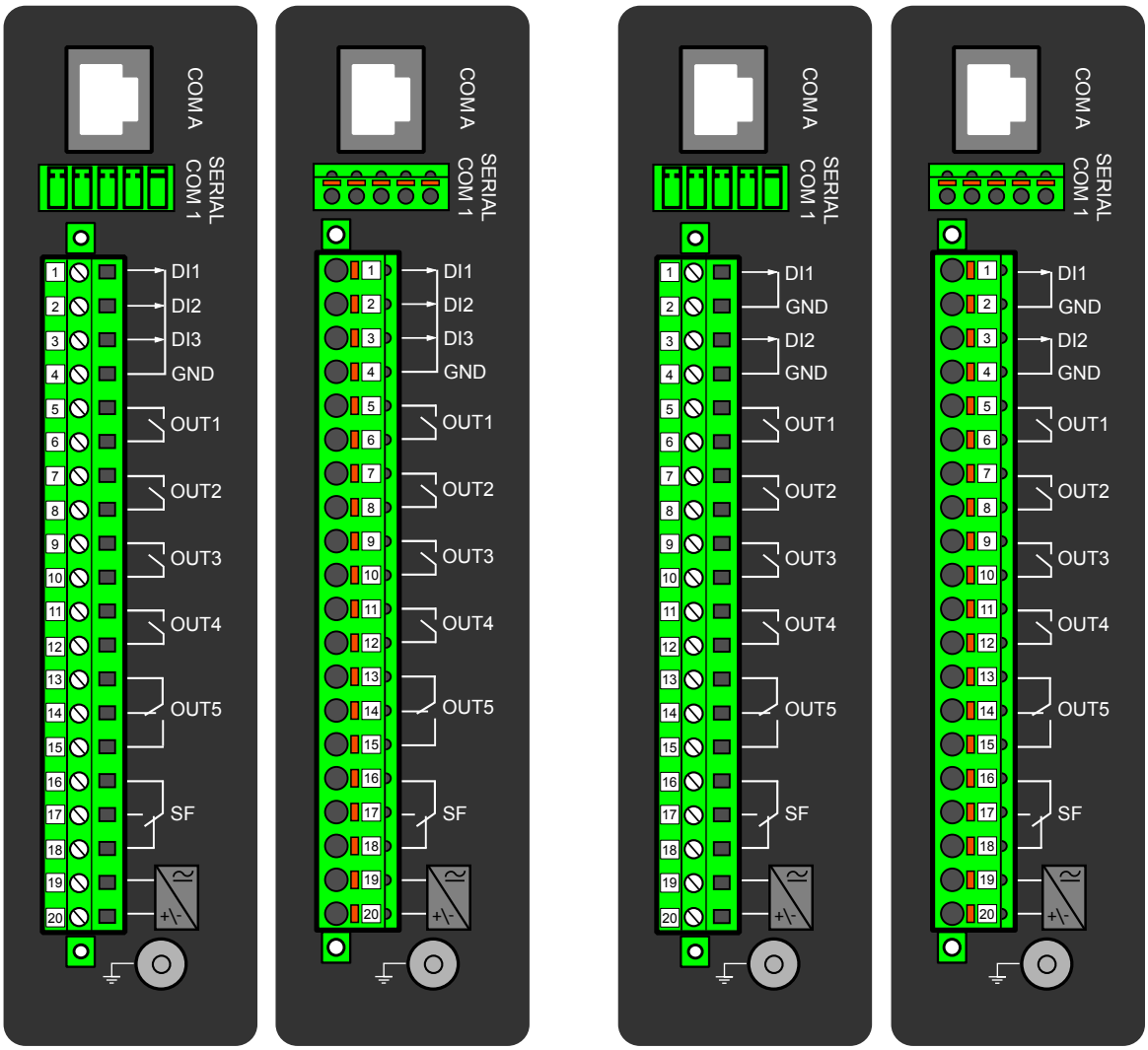

© Arcteq Relays Ltd
IM00014

Module connectors

Table. 8.2 - 345. Module connector descriptions.

Connector	Description	
COM A	Communication port A, or the RJ-45 port. Used for the setting tool connection and for SCADA communication.	
COM B	Communication port B, or the RS-485 port. Used for SCADA communication. The pins have the following designations: • Pin 1 = DATA + • Pin 2 = DATA – • Pin 3 = GND • Pins 4 & 5 = Terminator resistor enabled by shorting.	
	Model with 3 digital inputs	**Model with 2 digital inputs**
X 1	Digital input 1, nominal threshold voltage 24 V, 110 V or 220 V.	Digital input 1, nominal threshold voltage 24 V, 110 V or 220 V.
X 2	Digital input 2, nominal threshold voltage 24 V, 110 V or 220 V.	GND for digital input 1.
X 3	Digital input 3, nominal threshold voltage 24 V, 110 V or 220 V.	Digital input 2, nominal threshold voltage 24 V, 110 V or 220 V.
X 4	Common GND for digital inputs 1, 2 and 3.	GND for digital input 2.
X 5:6	Output relay 1, with a normally open (NO) contact.	
X 7:8	Output relay 2, with a normally open (NO) contact.	
X 9:10	Output relay 3, with a normally open (NO) contact.	
X 11:12	Output relay 4, with a normally open (NO) contact.	
X 13:14:15	Signaling relay 5, with a changeover contact. Not to be used in trip coil control.	
X 16:17:18	System fault's signaling relay, with a changeover contact. Pins 16 and 17 are closed when the unit has a system fault or is powered OFF. Pins 16 and 18 are closed when the unit is powered ON and there is no system fault.	
X 19:20	Power supply IN. Either 88…265 VAC/DC (model A; order code "H") or 18…75 DC (model B; order code "L"). Positive side (+) to Pin 20.	
GND	The device's earthing connector.	

By default, the CPU module (combining the CPU, the I/O and the power supply) is included in all AQ 200 series devices to provide two standard communication ports and the device's basic digital I/O. The module can be ordered to include 2 or 3 digital inputs.

The digital output controls can be set by the user with software. Digital outputs are controlled in 5 ms program cycles. All output contacts are mechanical. The rated voltage of the NO/NC outputs is 250 VAC/DC.

Digital input and output settings.

The current consumption of the digital inputs is 2 mA when activated. The range of the operating voltage is 24 V/110 V/220 V depending on the ordered hardware. All digital inputs are scannced in 5 ms program cycles.

The settings described in the table below can be found at *Control → Device I/O → Digital input settings* in the device settings.

Table. 8.2 - 346. Digital input settings.

Name	Range	Step	Default	Description
DIx Polarity	• NO (Normally open) • NC (Normally closed)	-	NO	Selects whether the status of the digital input is 1 or 0 when the input is energized.
DIx Activation delay	0.000…1800.000 s	0.001 s	0.000 s	Defines the delay for the status change from 0 to 1.
DIx Drop-off time	0.000…1800.000 s	0.001 s	0.000 s	Defines the delay for the status change from 1 to 0.
DIx AC mode	• Disabled • Enabled	-	Disabled	Selects whether or not a 30-ms deactivation delay is added to account for alternating current.

Digital outputs

The digital output controls can be set by the user with software. Digital outputs are controlled in 5 ms program cycles. All output contacts are mechanical. The rated voltage of the NO/NC outputs is 250 VAC/DC.

Table. 8.2 - 347. Digital output settings.

Name	Range	Description
Out x Polarity	• NO • NC	Determines the normal status of the output relay. Digital outputs are configured as “normally open” relays by default. Each output can be changed to “normally closed” using the "OUTx Polarity" parameter. Please note that this change is implemented in software only. If the device is powered off, the outputs will revert to an open state and return to the configured polarity once power is restored. If a truly “normally closed” contact is required, use the changeover relay OUT5 available in the CPU module of the device. An NC output signal does not open during a Communication or Protection reset.

Digital input and output descriptions

CPU card digital inputs and outputs can be given a description. The user defined description are displayed in most of the menus:

- logic editor
- matrix
- block settings
-
-

© Arcteq Relays Ltd
IM00014

- etc.

Table. 8.2 - 348. Digital input and output user description.

Name	Range	Default	Description
User editable description DIx	1...31 characters	DIx	Description of the digital input. This description is used in several menu types for easier identification.
User editable description OUTx		OUTx	Description of the digital output. This description is used in several menu types for easier identification.

Scanning cycle

All digital inputs are scanned in a 5 ms cycle, meaning that the state of an input is updated every 0…5 milliseconds. When an input is used internally in the device (either in setting group change or logic), it takes additional 0…5 milliseconds to operate. Theoretically, therefore, it takes 0…10 milliseconds to change the setting group when a digital input is used for group control or a similar function. In practice, however, the delay is between 2…8 milliseconds about 95 % of the time. When a digital input is connected directly to a digital output (OUT1…OUTx), it takes an additional 5 ms round. Therefore, when a digital input controls a digital output internally, it takes 0…15 milliseconds in theory and 2…13 milliseconds in practice.

NOTICE!
The mechanical delay of the relay is not included in these approximations!

8.3 Current measurement module

Figure. 8.3 - 257. Module connections with standard and ring lug terminals.

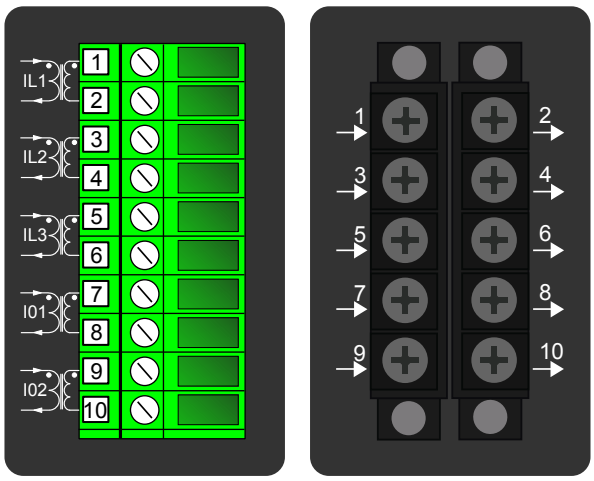

Connector	Description
CTM 1-2	Phase current measurement for phase L1 (A).
CTM 3-4	Phase current measurement for phase L2 (B).
CTM 5-6	Phase current measurement for phase L3 (C).
CTM 7-8	Coarse residual current measurement I01.

Connector	Description
CTM 9-10	Fine residual current measurement I02.

A basic current measurement module with five channels includes three-phase current measurement inputs as well as coarse and fine residual current inputs. The CT module is available with either standard or ring lug connectors.

The current measurement module is connected to the secondary side of conventional current transformers (CTs). The nominal current for the phase current inputs is 5 A. The input nominal current can be scaled for secondary currents of 1…10 A. The secondary currents are calibrated to nominal currents of 1 A and 5 A, which provide ±0.5 % inaccuracy when the range is 0.005…4 × I_n.

The measurement ranges are as follows:

- Phase currents 25 mA…250 A (RMS)
- Coarse residual current 5 mA…150 A (RMS)
- Fine residual current 1 mA…75 A (RMS)

The characteristics of phase current inputs are as follows:

- The angle measurement inaccuracy is less than ± 0.2 degrees with nominal current.
- The frequency measurement range of the phase current inputs is 6…1800 Hz with standard hardware.
- The sample rate of the signal is 64 samples/cycle when the system frequency ranges from 6 Hz to 75 Hz.

For further details please refer to the "Current measurement" chapter in the “Technical data” section of this document.

8.4 Voltage measurement module

Figure. 8.4 - 258. Voltage measurement module can be equipped with standard screw terminals or spring cage terminals for connection.

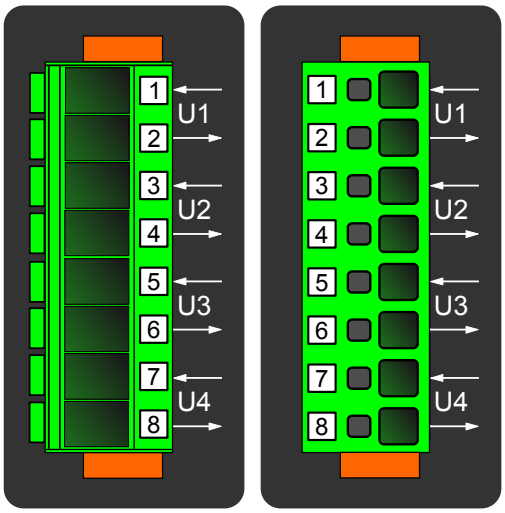

Connector	Description
VTM 1-2	Configurable voltage measurement input U1.
VTM 3-4	Configurable voltage measurement input U2.

© Arcteq Relays Ltd
IM00014

Connector	Description
VTM 5-6	Configurable voltage measurement input U3.
VTM 7-8	Configurable voltage measurement input U4.

A basic voltage measurement module with four channels includes four voltage measurement inputs that can be configured freely.

The voltage measurement module is connected to the secondary side of conventional voltage transformers (VTs) or directly to low-voltage systems secured by fuses. The nominal voltage can be set between 100…400 V. Voltages are calibrated in a range of 0…240 V, which provides ± 0.2 % inaccuracy in the same range.

The voltage input characteristics are as follows:

- The measurement range is 0.5…480.0 V per channel.
- The angle measurement inaccuracy is less than ± 0.5 degrees within the nominal range.
- The frequency measurement range of the voltage inputs is 6…1800 Hz with standard hardware.
- The sample rate of the signal is 64 samples/cycle when the system frequency ranges from 6 Hz to 75 Hz.

For further details please refer to the "Voltage measurement" chapter in the “Technical data” section of this document.

8.5 Option cards

8.5.1 Digital input module (optional)

Figure. 8.5.1 - 259. Digital input module (DI8) with eight add-on digital inputs. Can be equipped with standard screw terminals or spring cage terminals for connection.

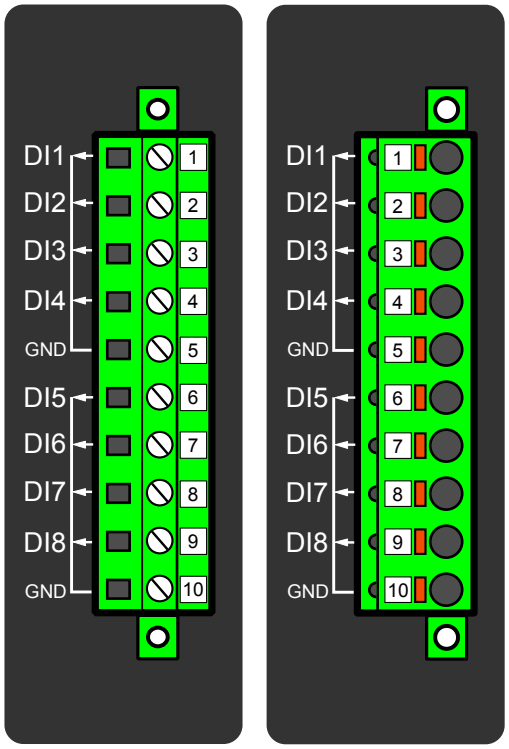

Connector	Description (x = the number of digital inputs in other modules that preceed this one in the configuration)
X 1	DIx + 1
X 2	DIx + 2
X 3	DIx + 3
X 4	DIx + 4
X 5	Common earthing for the first four digital inputs.
X 6	DIx + 5
X 7	DIx + 6
X 8	DIx + 7
X 9	DIx + 8
X 10	Common earthing for the other four digital inputs.

The DI8 module is an add-on module with eight (8) galvanically isolated digital inputs. This module can be ordered directly to be installed into the device in the factory, or it can be upgraded in the field after the device's original installation when required. The properties of the inputs in this module are the same as those of the inputs in the main processor module. The current consumption of the digital inputs is 2 mA when activated, while the range of the operating voltage is from 0…265 VAC/DC. The activation and release thresholds are set in the software and the resolution is 1 V. All digital inputs are scannced in 5 ms program cycles, and their pick-up and release delays as well as their NO/NC selection can be set with software.

For the naming convention of the digital inputs provided by this module please refer to the chapter titled "Construction and installation".

For technical details please refer to the chapter titled "Digital input module" in the "Technical data" section of this document.

The hardware configuration code of this module is "B". For more information, please refer to the "Ordering information" chapter of this document.

Setting up the activation and release delays

The settings described in the table below can be found at *Control → Device I/O → Digital input settings* in the device settings.

Table. 8.5.1 - 349. Digital input settings of DI8 module.

Name	Range	Step	Default	Description
DIx Polarity	• NO (Normally open) • NC (Normally closed)	-	NO	Selects whether the status of the digital input is 1 or 0 when the input is energized.

© Arcteq Relays Ltd
IM00014

Name	Range	Step	Default	Description
DIx Activation threshold	16.0…200.0 V	0.1 V	88 V	Defines the activation threshold for the digital input. When "NO" is the selected polarity, the measured voltage exceeding this setting activates the input. When "NC" is the selected polarity, the measured voltage exceeding this setting deactivates the input.
DIx Release threshold	10.0…200.0 V	0.1 V	60V	Defines the release threshold for the digital input. When "NO" is the selected polarity, the measured voltage below this setting deactivates the input. When "NC" is the selected polarity, the measured voltage below this setting activates the input.
DIx Activation delay	0.000…1800.000 s	0.001 s	0.000 s	Defines the delay when the status changes from 0 to 1. Not visible when DI has been set to AC mode with "DIx AC mode" parameter.
DIx Drop-off time	0.000…1800.000 s	0.001 s	0.000 s	Defines the delay when the status changes from 1 to 0.
DIx AC Mode	• Disabled • Enabled	-	Disabled	Selects whether or not a 30-ms deactivation delay is added to take the alternating current into account. The "DIx Release threshold" parameter is hidden and forced to 10 % of the set "DIx Activation threshold" parameter.
DIx Counter	$0…2^{32}–1$	1	0	Displays the number of times the digital input has changed its status from 0 to 1.
DIx Clear counter	• - • Clear	-	-	Resets the DIx counter value to zero.

The user can set the activation threshold individually for each digital input. When the activation and release thresholds have been set properly, they will result in the digital input states to be activated and released reliably. The selection of the normal state between normally open (NO) and normally closed (NC) defines whether or not the digital input is considered activated when the digital input channel is energized.

The diagram below depicts the digital input states when the input channels are energized and de-energized.

Figure. 8.5.1 - 260. Digital input state when energizing and de-energizing the digital input channels.

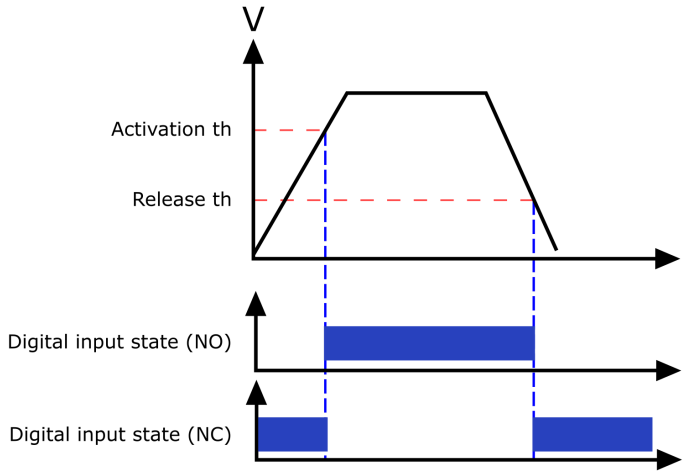

Digital input descriptions

Option card inputs can be given a description. The user defined description are displayed in most of the menus:

- logic editor
- matrix
- block settings
- etc.

Table. 8.5.1 - 350. Digital input user description.

Name	Range	Default	Description
User editable description DIx	1...31 characters	DIx	Description of the digital input. This description is used in several menu types for easier identification.

Digital input voltage measurements

Digital input option card channels measure voltage on each channel. The measured voltage can be seen at *Control → Device IO → Digital inputs → Digital input voltages*.

Table. 8.5.1 - 351. Digital input channel voltage measurement.

Name	Range	Step	Description
DIx Voltage now	0.000...275.000 V	0.001 V	Voltage measurement of a digital input channel.

© Arcteq Relays Ltd
IM00014

8.5.2 Digital output module (optional)

Figure. 8.5.2 - 261. Digital output module (DO5) with five add-on digital outputs. Can be equipped with standard screw terminals or spring cage terminals for connection.

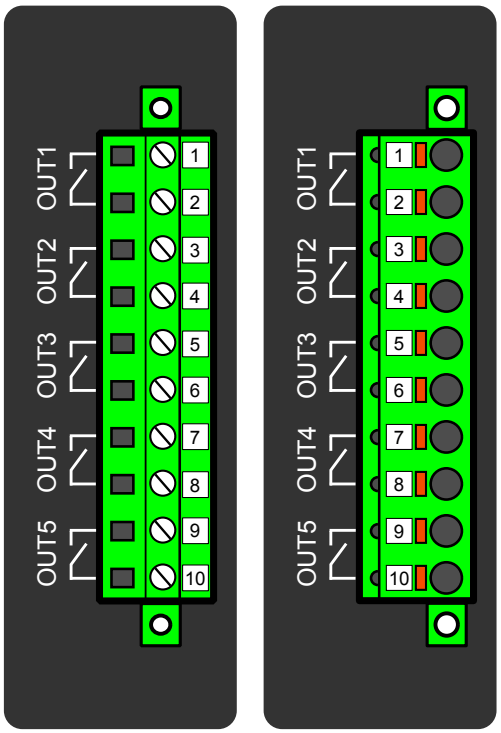

Connector	Description
X 1–2	OUTx + 1 (1st and 2nd pole NO)
X 3–4	OUTx + 2 (1st and 2nd pole NO)
X 5–6	OUTx + 3 (1st and 2nd pole NO)
X 7–8	OUTx + 4 (1st and 2nd pole NO)
X 9–10	OUTx + 5 (1st and 2nd pole NO)

The DO5 module is an add-on module with five (5) mechanical type digital outputs. This module can be ordered directly to be installed into the device in the factory, or it can be upgraded in the field after the device's original installation when required. The properties of the outputs in this module are the same as those of the outputs in the main processor module. Output control logic is user configurable. All digital outputs are controlled in 5 ms program cycles. The rated voltage of the outputs is 250 VAC/DC.

For the naming convention of the digital outputs provided by this module please refer to the chapter titled "Construction and installation".

For technical details please refer to the chapter titled "Digital output module" in the "Technical data" section of this document.

The hardware configuration code of this module is "C". For more information, please refer to the "Ordering information" chapter of this document.

Digital output settings

The parameters described in the table below can be found at *Control → Device I/O → Digital Outputs → Digital Output Settings* in the device settings.

Table. 8.5.2 - 352. Digital output user description.

Name	Range	Default	Description
OUTx Polarity	• NO • NC	NO	Digital outputs are configured as “normally open” relays by default. Each output can be changed to “normally closed” using the "OUTx Polarity" parameter. Please note that this change is implemented in software only. If the device is powered off, the outputs will revert to an open state and return to the configured polarity once power is restored. If a truly “normally closed” contact is required, use the changeover relay OUT5 available in the CPU module of the device.

Digital output descriptions

Option card outputs can be given a description. The user defined description are displayed in most of the menus:

- logic editor
- matrix
- block settings
- etc.

The parameters described in the table below can be found at *Control → Device I/O → Digital Outputs → Digital Output Descriptions* in the device settings.

Table. 8.5.2 - 353. Digital output user description.

Name	Range	Default	Description
User editable description OUTx	1...31 characters	OUTx	Description of the digital output. This description is used in several menu types for easier identification.

© Arcteq Relays Ltd
IM00014

8.5.3 Point sensor arc protection module (optional)

Figure. 8.5.3 - 262. Arc protection module. Can be equipped with standard screw terminals or spring cage terminals for connection.

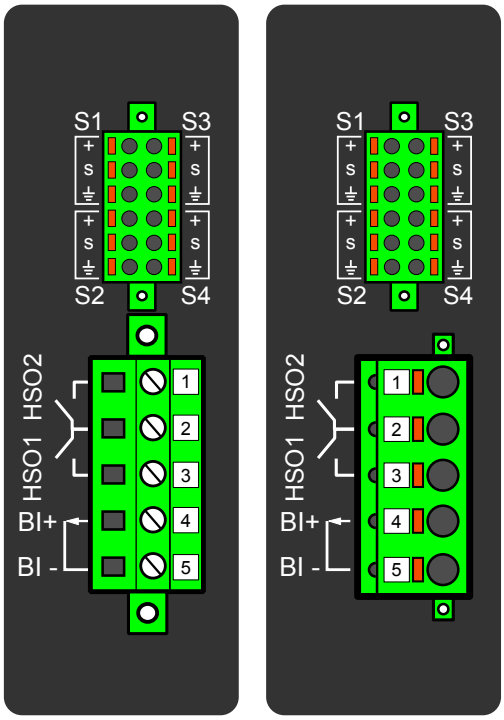

Table. 8.5.3 - 354. Module connections.

Connector	Description
S1	Light sensor channels 1…4 with positive ("+"), sensor ("S") and earth connectors.
S2	
S3	
S4	
X 1	HSO2 (+, NO)
X 2	Common battery positive terminal (+) for the HSOs.
X 3	HSO1 (+, NO)
X 4	Binary input 1 (+ pole)
X 5	Binary input 1 (– pole)

The arc protection module is an add-on module with four (4) light sensor channels, two (2) high-speed semiconductor outputs and one (1) binary input. This module can be ordered directly to be installed into the device in the factory, or it can be upgraded in the field after the device's original installation when required. Each channel can have up to three (3) light sensors serially connected to it.

High-speed outputs can used as signaling outputs. HSO1 and HSO2 can send overcurrent or light information to external AQ 100 or AQ 200 series devices.

The rated voltage of the binary input is 24 VDC. The pick-up threshold is ≥16 VDC. The binary input can be used for receiving external light signal or other signals related to arc protection applications. Please note that the binary input's delay is 5…10ms.

> NOTICE!
> BI1, HSO1 and HSO2 are not visible in the *Binary inputs* and *Binary outputs* menus (*Control → Device I/O*), they can only be programmed in the arc protection function matrix menu (*Protection → Arc protection → I/O → Direct output control* and *HSO control*).

For further information please refer to the chapter titled "Point sensor arc protection module" in the "Technical data" section of this manual.

The hardware configuration code of this module is "D". For more information, please refer to the "Ordering information" chapter of this document.

8.5.4 RTD input module (optional)

Figure. 8.5.4 - 263. RTD input module connectors.

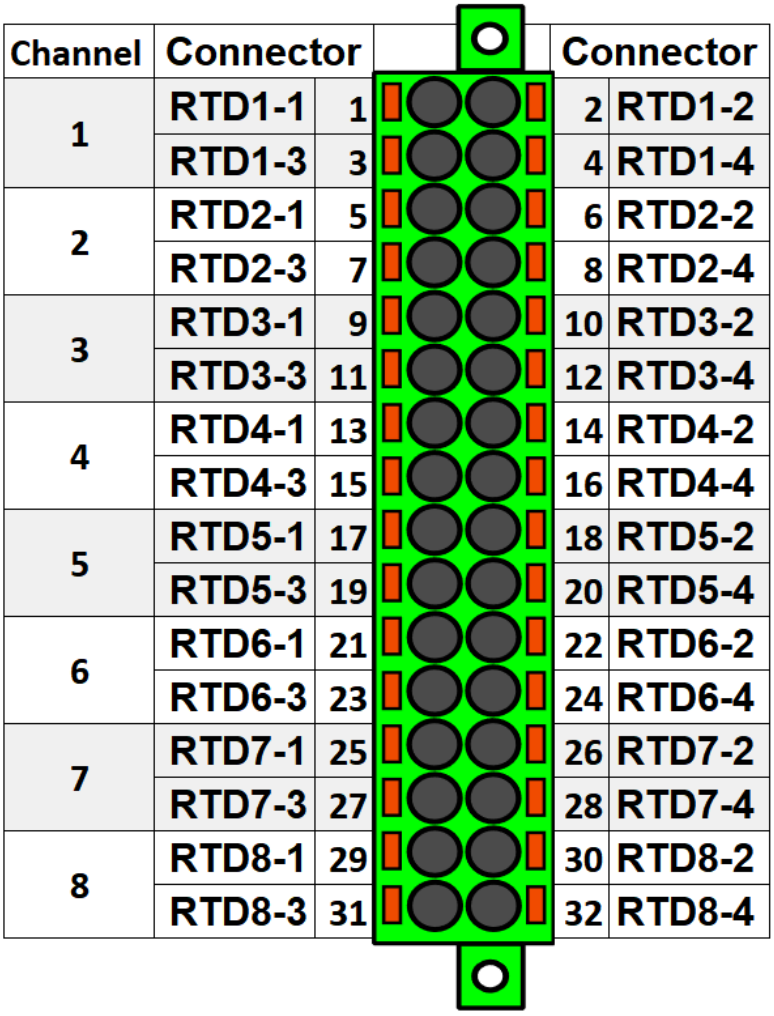

Channel	Connector		Connector	
1	RTD1-1	1	2	RTD1-2
	RTD1-3	3	4	RTD1-4
2	RTD2-1	5	6	RTD2-2
	RTD2-3	7	8	RTD2-4
3	RTD3-1	9	10	RTD3-2
	RTD3-3	11	12	RTD3-4
4	RTD4-1	13	14	RTD4-2
	RTD4-3	15	16	RTD4-4
5	RTD5-1	17	18	RTD5-2
	RTD5-3	19	20	RTD5-4
6	RTD6-1	21	22	RTD6-2
	RTD6-3	23	24	RTD6-4
7	RTD7-1	25	26	RTD7-2
	RTD7-3	27	28	RTD7-4
8	RTD8-1	29	30	RTD8-2
	RTD8-3	31	32	RTD8-4

The RTD input module is an add-on module with eight (8) RTD input channels. Each input supports 2-wire, 3-wire and 4-wire RTD sensors. The sensor type can be selected with software for two groups, four channels each. The card supports Pt100 and Pt1000 sensors.

© Arcteq Relays Ltd

For further information please refer to the chapter titled "RTD input module" in the "Technical data" section of this manual.

The hardware configuration code of this module is "F". For more information, please refer to the "Ordering information" chapter of this document.

Figure. 8.5.4 - 264. RTD sensor connection types.

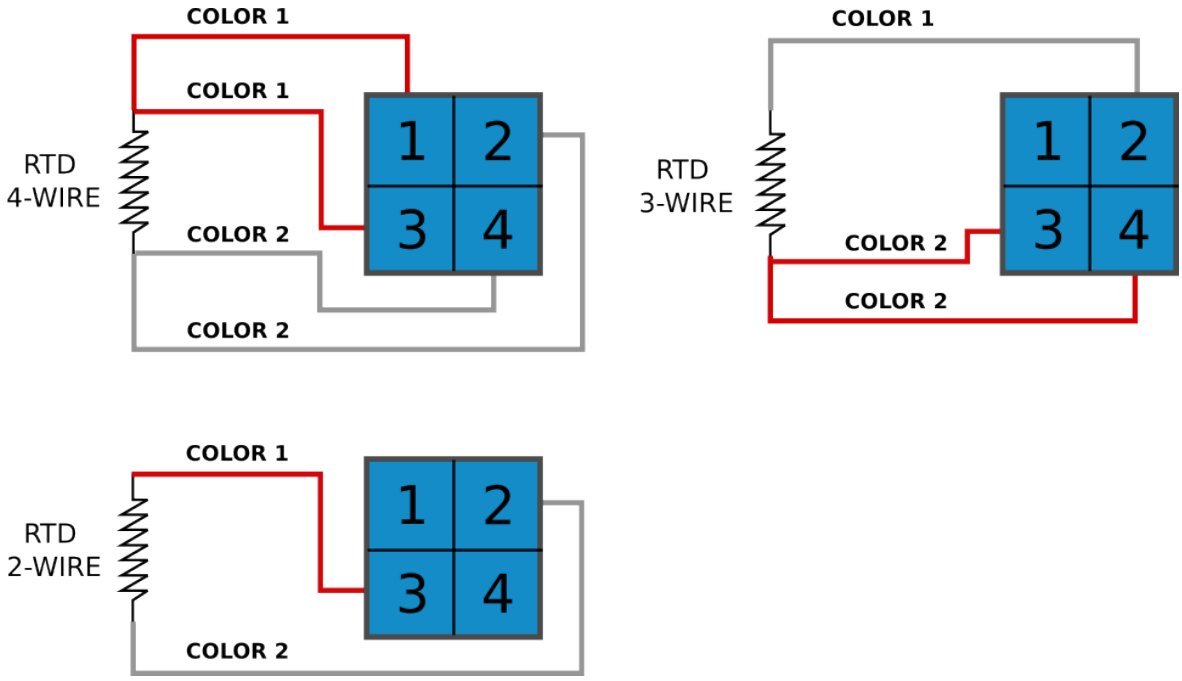

8.5.5 Serial RS-232 communication module (optional)

Figure. 8.5.5 - 265. Serial RS-232 module connectors.

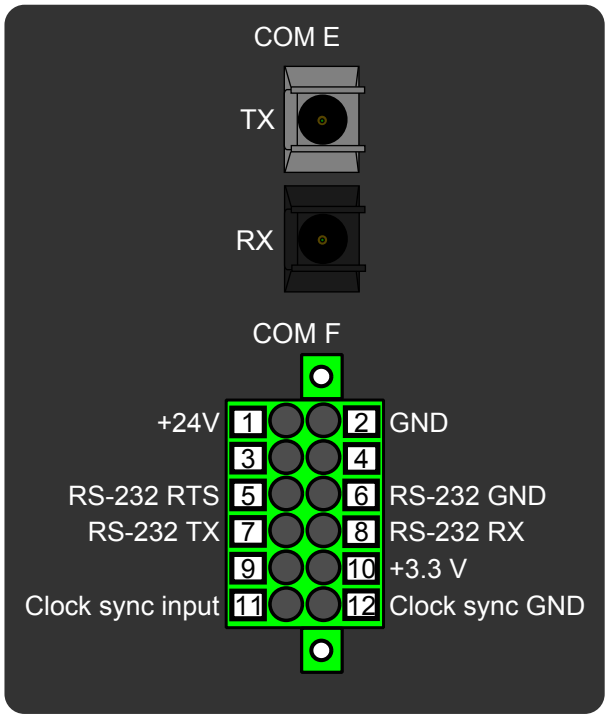

Table. 8.5.5 - 355. Module connections.

Connector	Pin	Name	Description
COM E	-	Serial fiber	• Serial-based communications • Port options: ◦ Glass/glass ◦ Plastic/plastic ◦ Glass/plastic ◦ Plastic/glass • Wavelength 660 nm • Compatible with 50/125 µm, 62.5/125 µm, 100/140 µm, and 200 µm Plastic-Clad Silica (PCS) fiber • Compatible with ST connectors
COM F	1	+24 V input	Optional external auxiliary voltage for serial fiber.
	2	GND	
	3	-	Not in use.
	4		
	5	RS-232 RTS	Serial based communications.
	6	RS-232 GND	
	7	RS-232 TX	
	8	RS-232 RX	
	9	-	Not in use.
	10	+3.3 V output (spare)	Spare power source for external equipment (45 mA).
	11	Clock sync input	Clock synchronization input (supports IRIG-B).
	12	Clock sync GND	

The option card includes two serial communication interfaces: COM E is a serial fiber interface with glass/glass, plastic/plastic, glass/plastic and plastic/glass options, COM F is an RS-232 interface.

For further information please refer to the chapter titled "RS-232 & serial fiber communication module" in the "Technical data" section of this manual.

The hardware configuration codes of these modules are "L", "M", "N" and "O". For more information, please refer to the "Ordering information" chapter of this document.

© Arcteq Relays Ltd
IM00014

8.5.6 Double LC or RJ45 (HSR/PRP) Ethernet communication module (optional)

Figure. 8.5.6 - 266. LC and RJ45 100 Mbps Ethernet module connectors.

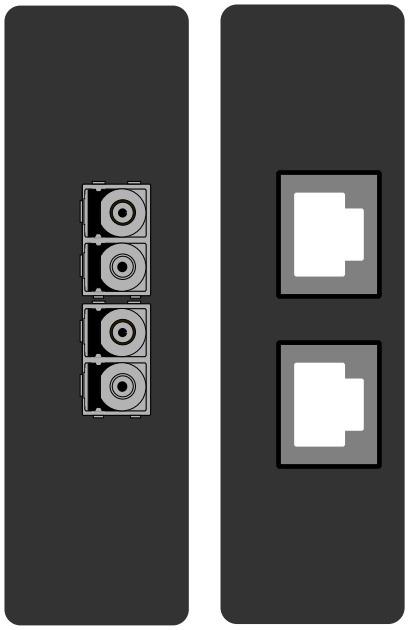

Card type	Description
LC ports	• Communication port D, 100 Mbps LC fiber connector. • 62.5/125 µm or 50/125 µm multimode (glass). • Wavelength 1300 nm. • HSR and PRP protocols supported.
RJ45	• RJ-45 connectors. • 10BASE-T and 100BASE-TX. • HSR and PRP protocols supported.

For further information please refer to the chapters titled "Double LC (HSR/PRP) Ethernet communication module" and "Double RJ45 (HSR/PRP) Ethernet communication module" in the "Technical data" section of this manual.

The hardware configuration codes of these modules are "J" (Double LC 100Mb Ethernet) and "K" (Double RJ45 100Mb Ethernet). For more information, please refer to the "Ordering information" chapter of this document.

8.5.7 Double ST 100 Ethernet & IRIG-B communication module (optional)

Figure. 8.5.7 - 267. Double ST 100 Mbps Ethernet communication module connectors.

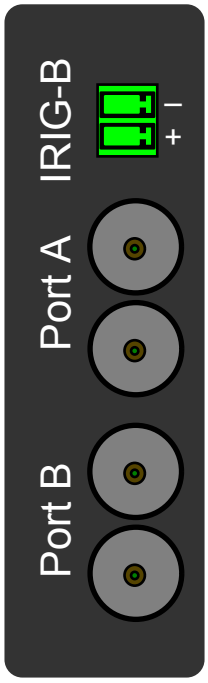

Connector	Description
Two-pin connector	• IRIG-B input
ST connectors	• Duplex ST connectors • 62.5/125 µm or 50/125 µm multimode fiber • Transmitter wavelength: 1260…1360 nm (nominal: 1310 nm) • Receiver wavelength: 1100…1600 nm • 100BASE-FX • Up to 2 km

This option cards supports redundant ring configuration and multidrop configurations. Please note that each ring can only contain AQ 200 series devices, and any third party devices must be connected to a separate ring.

For further information please refer to the chapter titled "Double ST Ethernet & IRIG-B communication module" in the "Technical data" section of this manual.

The hardware configuration code of this module is "H". For more information, please refer to the "Ordering information" chapter of this document.

© Arcteq Relays Ltd
IM00014

Figure. 8.5.7 - 268. Example of a multidrop configuration.

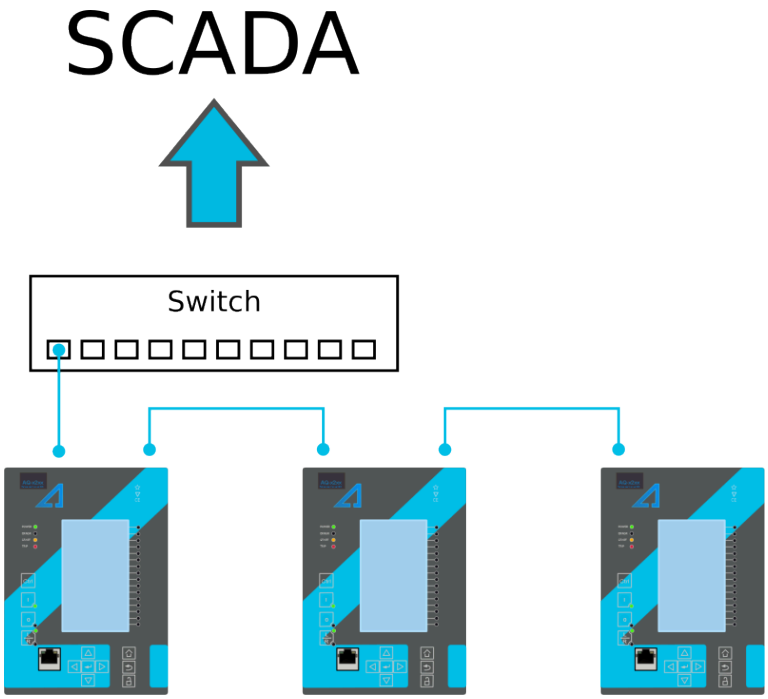

8.5.8 Double RJ45 Ethernet & IRIG-B communication module (optional)

Figure. 8.5.8 - 269. Double RJ-45 10/100 Mbps Ethernet communication module.

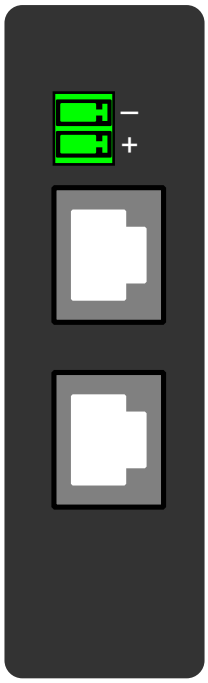

Connector	Description
Two-pin connector	• IRIG-B input

Connector	Description
RJ-45 connectors	• Two Ethernet ports • RJ-45 connectors • 10BASE-T and 100BASE-TX

This option card supports daisy chain configurations.

For further information please refer to the chapter titled "Double RJ45 Ethernet & IRIG-B communication module" in the "Technical data" section of this manual.

The hardware configuration code of this module is "G". For more information, please refer to the "Ordering information" chapter of this document.

8.5.9 Milliampere output module (4x mA out & 1x mA in) (optional)

Figure. 8.5.9 - 270. Milliampere output (mA) I/O module connections. Can be equipped with standard screw terminals or spring cage terminals for connection.

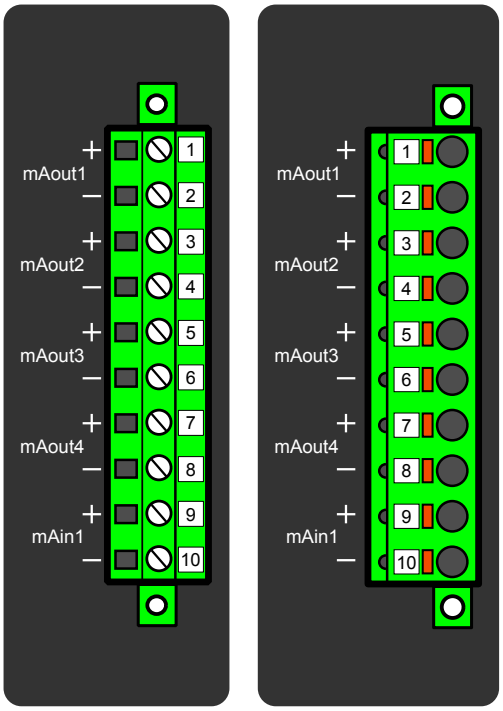

Connector	Description
Pin 1	mA OUT 1 + connector (0…24 mA)
Pin 2	mA OUT 1 – connector (0…24 mA)
Pin 3	mA OUT 2 + connector (0…24 mA)
Pin 4	mA OUT 2 – connector (0…24 mA)
Pin 5	mA OUT 3 + connector (0…24 mA)
Pin 6	mA OUT 3 – connector (0…24 mA)
Pin 7	mA OUT 4 + connector (0…24 mA)

© Arcteq Relays Ltd
IM00014

Connector	Description
Pin 8	mA OUT 4 – connector (0…24 mA)
Pin 9	mA IN 1 + connector (0…33 mA)
Pin 10	mA IN 1 – connector (0…33 mA)

The milliampere output (mA) I/O module is an add-on module with four (4) mA outputs and one (1) mA input. Both the outputs and the input are in two galvanically isolated groups, with one pin for the positive (+) connector and one pin for the negative (–) connector.

This module can be ordered directly to be installed into the device in the factory, or it can be upgraded in the field after the device's original installation when required.

The user sets the mA I/O with the mA outputs control function. This can be done at *Control → Device I/O → mA outputs* in the device configuration settings.

For further information please refer to the chapter titled "Milliampere output module (4 x mA out & 1 x mA in)" in the "Technical data" section of this manual.

The hardware configuration code of this module is "I". For more information, please refer to the "Ordering information" chapter of this document.

8.6 Dimensions and installation

The device can be installed either to a standard 19” rack or to a switchgear panel with cutouts. The desired installation type is defined in the order code. When installing to a rack, the device takes a quarter (¼) of the rack's width, meaning that a total of three devices can be installed to the same rack next to one another.

The figures below describe the device dimensions (first figure), the device installation (second), and the panel cutout dimensions and device spacing (third).

Figure. 8.6 - 271. Device dimensions.

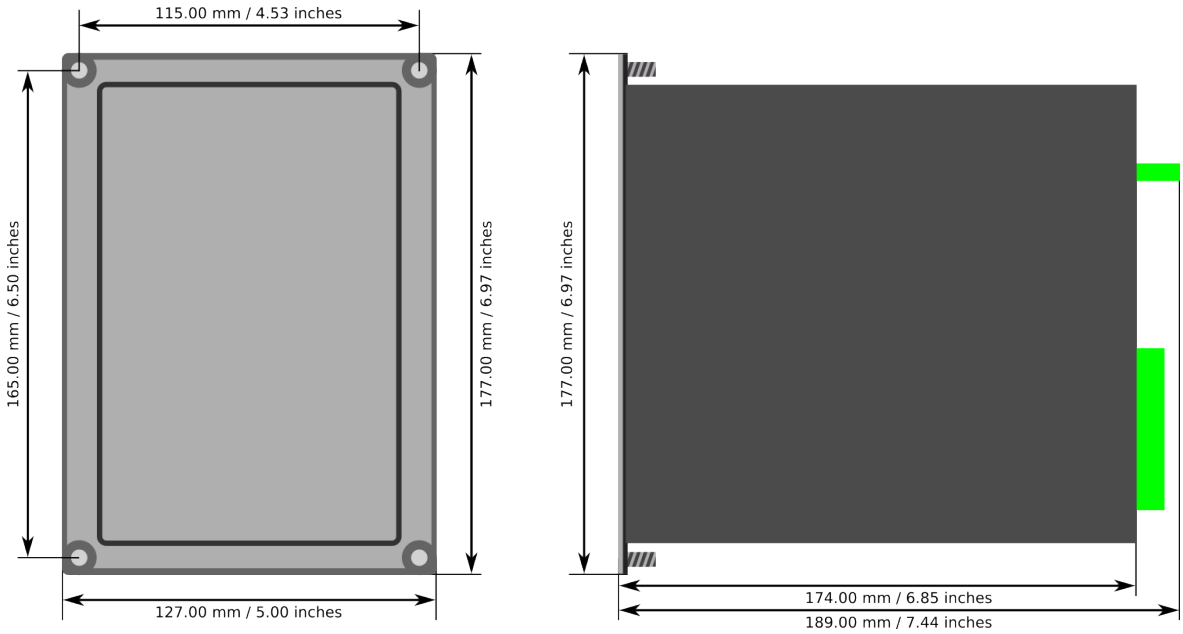

Figure. 8.6 - 272. Device installation.

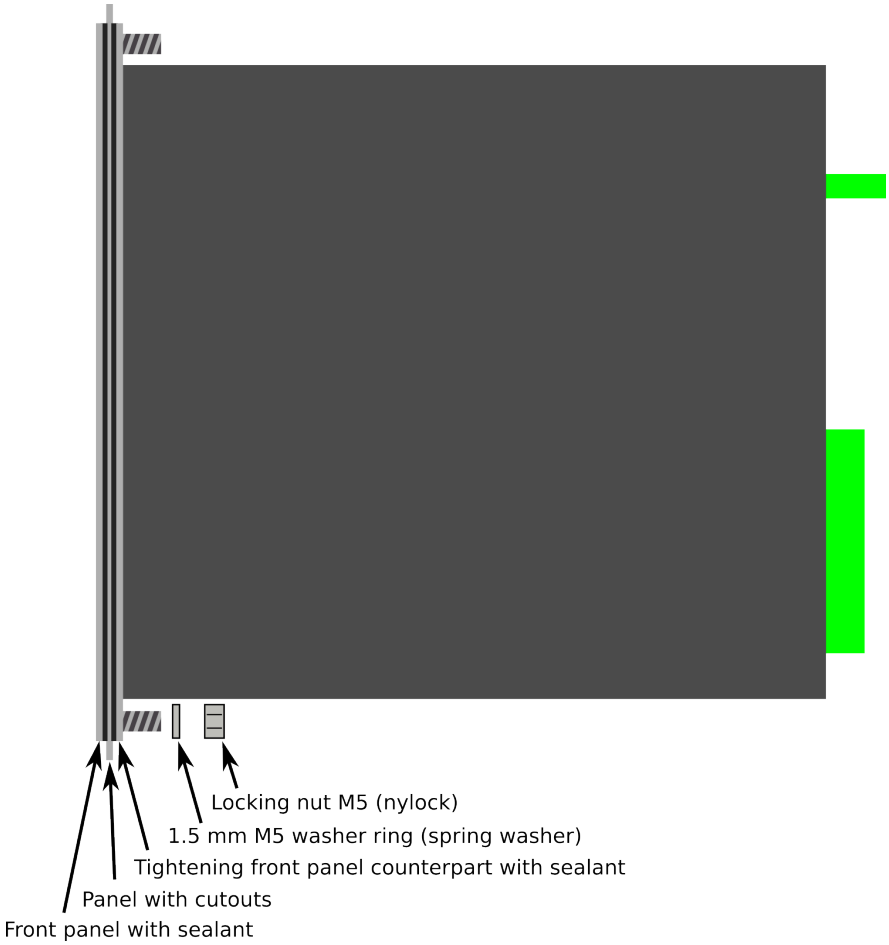

© Arcteq Relays Ltd

Figure. 8.6 - 273. Panel cutout dimensions and device spacing.

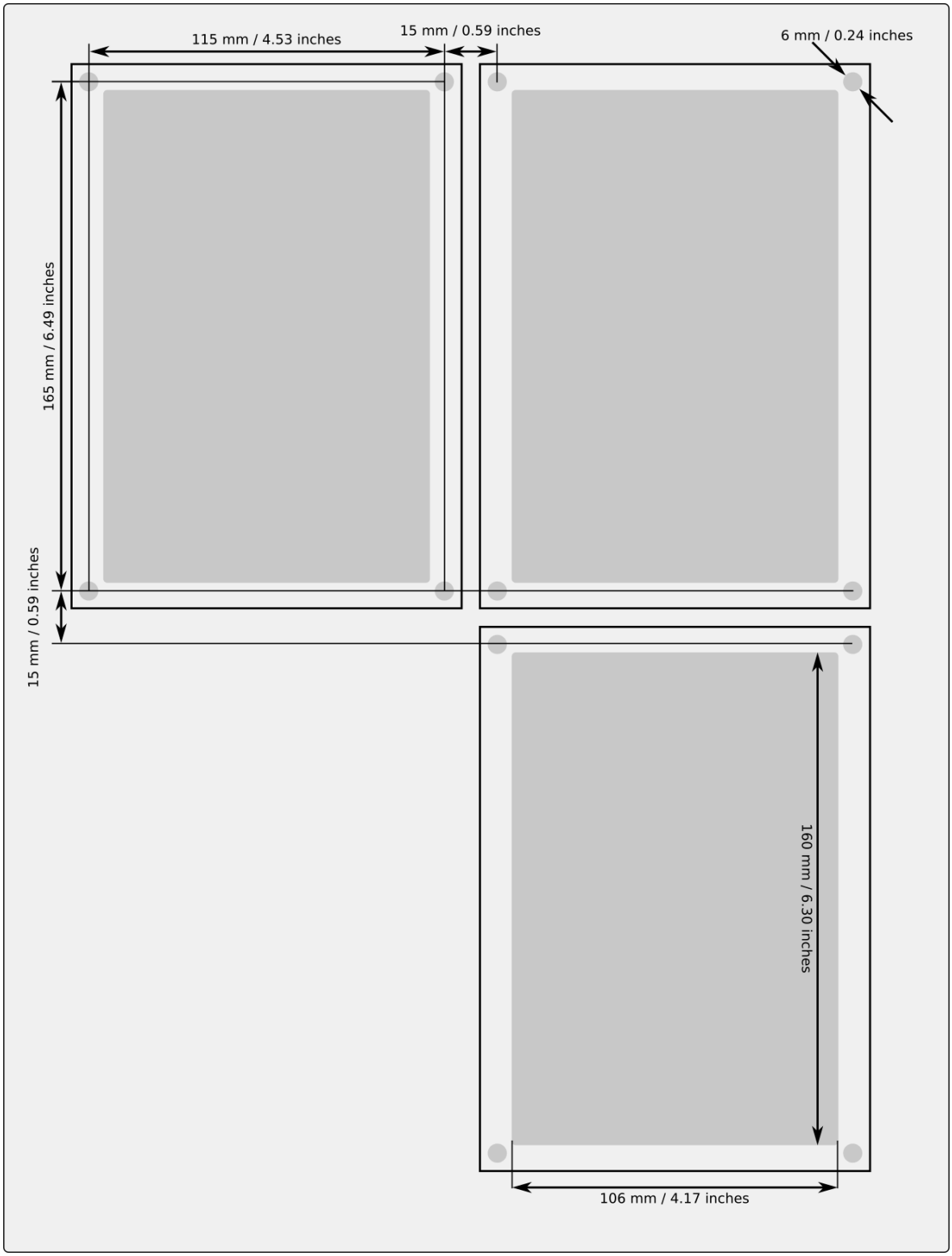

9 Technical data

9.1 Hardware

9.1.1 Measurements

9.1.1.1 Current measurement

Table. 9.1.1.1 - 356. Technical data for the current measurement module.

Connections	
Measurement channels/CT inputs	Three phase current inputs: IL1 (A), IL2 (B), IL3 (C) Two residual current inputs: Coarse residual current input I01, Fine residual current input I02
Phase current inputs (A, B, C)	
Sample rate	64 samples per cycle in frequency range 6...75Hz
Rated current I_N	5 A (configurable 0.2…20 A)
Thermal withstand	20 A (continuous) 100 A (for 10 s) 500 A (for 1 s) 1250 A (for 0.01 s)
Frequency measurement range	From 6…75Hz fundamental, up to the 31st harmonic current
Current measurement range	25 mA…250 A (RMS)
Current measurement inaccuracy	0.005…4.000 × I_N < ±0.5 % or < ±15 mA 4…20 × I_N < ±0.5 % 20…50 × I_N < ±1.0 %
Angle measurement inaccuracy	< ±0.2° (I> 0.1 A) < ±1.0° (I≤ 0.1 A)
Burden (50/60 Hz)	<0.1 VA
Transient overreach	<8 %
Coarse residual current input (I01)	
Rated current I_N	1 A (configurable 0.1…10 A)
Thermal withstand	25 A (continuous) 100 A (for 10 s) 500 A (for 1 s) 1250 A (for 0.01 s)
Frequency measurement range	From 6…75 Hz fundamental, up to the 31st harmonic current
Current measurement range	5 mA…150 A (RMS)

© Arcteq Relays Ltd
IM00014

Current measurement inaccuracy	0.002…10.000 × I_N < ±0.5 % or < ±3 mA 10…150 × I_N < ±0.5 %
Angle measurement inaccuracy	< ±0.2° (I> 0.05 A) < ±1.0° (I≤ 0.05 A)
Burden (50/60Hz)	<0.1 VA
Transient overreach	<5 %
Fine residual current input (I02)	
Rated current I_N	0.2 A (configurable 0.001…10 A)
Thermal withstand	25 A (continuous) 100 A (for 10 s) 500 A (for 1 s) 1250 A (for 0.01 s)
Frequency measurement range	From 6…75 Hz fundamental, up to the 31st harmonic current
Current measurement range	1 mA…75 A (RMS)
Current measurement inaccuracy	0.002…25.000 × I_N < ±0.5 % or < ±0.6 mA 25…375 × I_N < ±1.0 %
Angle measurement inaccuracy	< ±0.2° (I> 0.01 A) < ±1.0° (I≤ 0.01 A)
Burden (50/60Hz)	<0.1 VA
Transient overreach	<5 %
Screw connection terminal block (standard)	
Terminal block	Phoenix Contact FRONT 4-H-6,35
Nominal cross section (solid or stranded wire)	4 mm^2
Ring lug terminal block connection (option)	
Ring terminal dimensions	Max 8mm diameter, with minimum 3,5mm screw hole

NOTICE!
Current measurement accuracy has been verified with 50/60 Hz.

The amplitude difference is 0.2 % and the angle difference is 0.5 degrees higher at 16.67 Hz and other frequencies.

9.1.1.2 Voltage measurement

Table. 9.1.1.2 - 357. Technical data for the voltage measurement module.

Connection	
Measurement channels/VT inputs	4 independent VT inputs (U1, U2, U3 and U4)

Measurement	
Sample rate	64 samples per cycle in frequency range 6...75Hz
Voltage measuring range	0.50…480.00 V (RMS)
Rated voltage U_N	100 V / 110 V / 115 V / 120 V (RMS)
Voltage measurement inaccuracy	1…2 V ±1.5 % 2…10 V ±0.5 % 10…480 V ±0.35 %
Angle measurement inaccuracy	±0.2 degrees (15…300 V) ±1.5 degrees (1…15 V)
Voltage measurement bandwidth (freq.)	7…75 Hz fundamental, up to the 31st harmonic voltage
Terminal block connection	
Screw connection terminal block (standard)	Phoenix Contact PC 5/ 8-STCL1-7,62
Spring cage terminal block (optional)	Phoenix Contact SPC 5/ 8-STCL-7,82
Nominal cross section (solid or stranded wire)	6 mm^2
Input impedance	~24.5 MΩ
Burden (50/60 Hz)	<0.02 VA
Thermal withstand	630 V_{RMS} (continuous)

NOTICE!
Voltage measurement accuracy has been verified with 50/60 Hz.

The amplitude difference is 0.2 % and the angle difference is 0.5 degrees higher at 16.67 Hz and other frequencies.

9.1.1.3 Power and energy measurement

Table. 9.1.1.3 - 358. Power and energy measurement accuracy

Power measurement P, Q, S	Frequency range 6…75 Hz
Inaccuracy	0.3 % <1.2 × I_N or 3 VA secondary 1.0 % >1.2 × I_N or 3 VA secondary
Energy measurement	**Frequency range 6…75 Hz**
Energy and power metering inaccuracy	0.5% down to 1A RMS (50/60Hz) as standard 0.2% down to 1A RMS (50/60Hz) option available (see the order code for details)

© Arcteq Relays Ltd
IM00014

9.1.1.4 Frequency measurement

Table. 9.1.1.4 - 359. Frequency measurement accuracy.

Frequency measurement performance	
Frequency measuring range	6…75 Hz fundamental, up to the 31st harmonic current or voltage
Inaccuracy	<1 mHz

NOTICE!
Please note that the frequency measurement accuracy has been verified with 50/60 Hz!

NOTICE!
Please note that if the frequency measurement if critical for your application, it is recommended to calibrate the device on-site during commissioning and every year afterwards! Please refer to the application note for instructions on frequency measurement calibration; it is available for download on our website (arcteq.com/documents-and-software/) under the "Application notes and white papers" tab for both the AQ 200 series and the AQ-ONE protection device.

9.1.2 CPU & Power supply

9.1.2.1 Auxiliary voltage

Table. 9.1.2.1 - 360. Power supply model A

Rated values	
Rated auxiliary voltage	80…265 V (AC/DC)
Power consumption	< 7 W (no option cards) < 15 W (maximum number of option cards)
Maximum permitted interrupt time	< 60 ms with 110 VDC
DC ripple	< 15 %
Other	
Minimum recommended fuse rating	MCB C2

Table. 9.1.2.1 - 361. Power supply model B

Rated values	
Rated auxiliary voltage	18…72 VDC
Power consumption	< 7 W (no option cards) < 15 W (maximum number of option cards)
Maximum permitted interrupt time	< 90 ms with 24 VDC

DC ripple	< 15 %
Other	
Minimum recommended fuse rating	MCB C2

9.1.2.2 CPU communication ports

Table. 9.1.2.2 - 362. Front panel local communication port.

Port	
Port media	Copper Ethernet RJ-45
Number of ports	1
Port protocols	PC-protocols FTP
Features	
Data transfer rate	100 MB/s
System integration	Can't be used for system protocols, only for local programming

Table. 9.1.2.2 - 363. Rear panel system communication port A.

Port	
Port media	Copper Ethernet RJ-45
Number of ports	1
Features	
Port protocols	IEC 61850 (1st edition) IEC 104 Modbus/TCP DNP3 FTP
Data transfer rate	100 MB/s
System integration	Can be used for system protocols and for local programming

Table. 9.1.2.2 - 364. Rear panel system communication port B.

Port	
Port media	Copper RS-485
Number of ports	1
Features	

© Arcteq Relays Ltd
IM00014

Port protocols	Modbus/RTU IEC 103 IEC 101 DNP3 SPA
Data transfer rate	65 580 kB/s
System integration	Can be used for system protocols

9.1.2.3 CPU digital inputs

Table. 9.1.2.3 - 365. CPU model-isolated digital inputs, with thresholds defined by order code.

Rated values	
Rated auxiliary voltage	265 V (AC/DC)
Nominal voltage	Order code defined: 24, 110, 220 V (AC/DC)
Pick-up threshold Release threshold	Order code defined: 19, 90,170 V Order code defined: 14, 65, 132 V
Scanning rate	5 ms
Settings	
Pick-up delay	Software settable: 0…1800 s
Polarity	Software settable: Normally On/Normally Off
Current drain	2 mA

9.1.2.4 CPU digital outputs

Table. 9.1.2.4 - 366. Digital outputs (Normally Open)

Rated values	
Rated auxiliary voltage	265 V (AC/DC)
Continuous carry	5 A
Make and carry 0.5 s Make and carry 3 s	30 A 15 A
Breaking capacity, DC (L/R = 40 ms) at 48 VDC at 110 VDC at 220 VDC	 1 A 0.4 A 0.2 A
Control rate	5 ms
Settings	
Polarity	Software settable: Normally Open / Normally Closed

Table. 9.1.2.4 - 367. Digital outputs (Change-Over)

Rated values	
Rated auxiliary voltage	265 V (AC/DC)
Continuous carry	2.5 A
Make and carry 0.5 s Make and carry 3 s	30 A 15 A
Breaking capacity, DC (L/R = 40 ms) at 48 VDC at 110 VDC at 220 VDC	 1 A 0.3 A 0.15 A
Control rate	5 ms
Settings	
Polarity	Software settable: Normally Open / Normally Closed

CAUTION!
Please note, that signaling relay 5 and system fault's signaling relay are designed only for signaling purposes, and are not to be used in trip coil control.

9.1.3 Option cards

9.1.3.1 Digital input module

Table. 9.1.3.1 - 368. Technical data for the digital input module.

General information	
Hardware configuration code	B
Rated values	
Rated auxiliary voltage	5…265 V (AC/DC)
Current drain	2 mA
Scanning rate Activation/release delay	5 ms 5...11 ms
Settings	
Pick-up threshold Release threshold	Software settable: 16…200 V, setting step 1 V Software settable: 10…200 V, setting step 1 V
Pick-up delay	Software settable: 0…1800 s
Drop-off delay	Software settable: 0…1800 s
Polarity	Software settable: Normally On/Normally Off
Terminal block connection	

© Arcteq Relays Ltd
IM00014

Screw connection terminal block (standard)	Phoenix Contact MSTB 2,5/10-ST-5,08
Spring cage terminals block (option)	Phoenix Contact FKC 2,5/10-STF-5,08
Solid or stranded wire Nominal cross section	2.5 mm^2

9.1.3.2 Digital output module

Table. 9.1.3.2 - 369. Technical data for the digital output module.

General information	
Hardware configuration code	C
Rated values	
Rated auxiliary voltage	265 V (AC/DC)
Continuous carry	5 A
Make and carry 0.5 s Make and carry 3 s	30 A 15 A
Breaking capacity, DC (L/R = 40 ms) at 48 VDC at 110 VDC at 220 VDC	 1 A 0.4 A 0.2 A
Control rate	5 ms
Settings	
Polarity	Software settable: Normally On/Normally Off
Terminal block connection	
Screw connection terminal block (standard)	Phoenix Contact MSTB 2,5/10-ST-5,08
Spring cage terminals block (option)	Phoenix Contact FKC 2,5/10-STF-5,08
Maximum cross section (solid or stranded wire)	2.5 mm^2

9.1.3.3 Point sensor arc protection module

Table. 9.1.3.3 - 370. Technical data for the point sensor arc protection module.

General information	
Hardware configuration code	D
Connections	
Input arc point sensor channels	S1, S2, S3, S4 (pressure and light, or light only)
Sensors per channel	3

Maximum cable length	200 m
Performance	
Pick-up light intensity	8, 25 or 50 kLx (the sensor is selectable in the order code)
Point sensor detection radius	180 degrees
Start and instant operating time (light only)	Typically <5 ms with dedicated semiconductor outputs (HSO) Typically <10 ms regular output relays

Table. 9.1.3.3 - 371. High-Speed Outputs (HSO1…2)

Rated values	
Rated auxiliary voltage	250 VDC
Continuous carry	2 A
Make and carry 0.5 s Make and carry 3 s	10 A 6 A
Breaking capacity, DC (L/R = 40 ms)	1 A/110 W
Control rate	5 ms
Operation delay	<1 ms
Polarity	Normally Off
Contact material	Semiconductor

CAUTION!
Please note that signaling relay 5 and system fault's signaling relay are designed only for signaling purposes! They are not to be used in trip coil control.

Table. 9.1.3.3 - 372. Binary input channel

Rated values	
Voltage withstand	265 VDC
Nominal voltage Pick-up threshold Release threshold	24 VDC ≥16 VDC ≤15 VDC
Scanning rate	5 ms
Polarity	Normally Off
Current drain	3 mA

Table. 9.1.3.3 - 373. Terminal block connections

Arc point sensor terminal block connections

© Arcteq Relays Ltd
IM00014

Spring cage terminal block	Phoenix Contact DFMC 1,5/ 6-STF-3,5
Maximum cross section (Solid or stranded wire)	1.5 mm^2
Binary input and HSO terminal block connections	
Screw connection terminal block (standard)	Phoenix Contact MSTB 2,5/5-ST-5,08
Spring cage terminals block (option)	Phoenix Contact FKC 2,5/10-STF-5,08
Maximum cross section (solid or stranded wire)	2.5 mm^2

NOTICE!
The polarity must be correct!

9.1.3.4 RTD input module

Table. 9.1.3.4 - 374. Technical data for the RTD input module.

General information	
Hardware configuration code	F
Channels 1-8	
2/3/4-wire RTD	
Pt100 or Pt1000	
Terminal block connection	
Spring cage terminals block	Phoenix Contact DFMC 1,5/ 16-STF-3,5
Maximum cross section (solid or stranded wire)	1.5 mm^2

9.1.3.5 Milliampere output module (4 x mA out & 1 x mA in)

Table. 9.1.3.5 - 375. Technical data for the milliampere output module.

General information	
Hardware configuration code	I
Signals	
Output magnitudes Input magnitudes	4 × mA output signal (DC) 1 × mA input signal (DC)
mA input	
Range (hardware) Range (measurement) Inaccuracy	0...33 mA 0...24 mA ±0.1 mA

Update cycle Response time at 5 ms cycle Update cycle time inaccuracy	5...10 000 ms, setting step 5 ms ~ 15 ms (13...18 ms) Max. +20 ms above the set cycle
mA input scaling range Output scaling range	0...4000 mA -1 000 000.0000…1 000 000.0000, setting step 0.0001
mA output	
Inaccuracy at 0...24 mA	±0.01 mA
Response time at 5 ms cycle [fixed]	< 5 ms
mA output scaling range Source signal scaling range	0...24 mA, setting step 0.001 mA -1 000 000.000…1 000 000.0000, setting step 0.0001
Terminal block connection	
Screw connection terminal block (standard)	Phoenix Contact MSTB 2,5/10-ST-5,08
Spring cage terminals block (option)	Phoenix Contact FKC 2,5/10-STF-5,08
Maximum cross section (solid or stranded wire)	2.5 mm^2

9.1.3.6 Double LC (HSR/PRP) Ethernet communication module

Table. 9.1.3.6 - 376. Technical data for the double LC 100 Mbps Ethernet communication module.

General information	
Hardware configuration code	J
Protocols	
Protocols	IEC 61850 IEC 104 Modbus/TCP DNP3 FTP
Redundancy	HSR and PRP
Data transfer rate	100 MB/s
System integration	Can be used for system protocols and for local programming
Ports	
Number of fiber ports	2
Communication port	LC fiber connector Wavelength 1300 nm
Fiber cable	50/125 µm or 62.5/125 µm multimode (glass)

© Arcteq Relays Ltd
IM00014

9.1.3.7 Double RJ-45 (HSR/PRP) Ethernet communication module

Table. 9.1.3.7 - 377. Technical data for the double RJ-45 100 Mbps Ethernet communication module.

General information	
Hardware configuration code	K
Features	
Protocols	IEC 61850 IEC 104 Modbus/TCP DNP3 FTP
Redundancy	HSR and PRP
Data transfer rate	100 MB/s
System integration	Can be used for system protocols and for local programming
Ports	
Number of ports	2
Communication port	Copper Ethernet RJ-45

9.1.3.8 Double ST Ethernet & IRIG-B communication module

Table. 9.1.3.8 - 378. Technical data for the double ST 100 Mbps Ethernet communication module.

General information	
Order code	H
Protocols	
Protocols	IEC61850 DNP/TCP Modbus/TCP IEC104 FTP
ST connectors	
Connector type	Duplex ST connectors 62.5/125 µm or 50/125 µm multimode fiber 100BASE-FX
Number of connectors	2
Transmitter wavelength	1260…1360 nm (nominal: 1310 nm)
Receiver wavelength	1100…1600 nm
Maximum distance	2 km

Data transfer rate	100 MB/s
IRIG-B Connector	
Screw connection terminal block	Phoenix Contact MC 1,5/ 2-ST-3,5 BD:1-2
Maximum cross section (solid or stranded wire)	1.5 mm^2

9.1.3.9 Double RJ-45 Ethernet & IRIG-B communication module

Table. 9.1.3.9 - 379. Technical data for the double RJ-45 Ethernet communication module.

General information	
Hardware configuration code	G
Ethernet connector features	
Protocols	IEC 61850 IEC 104 Modbus/TCP DNP3 FTP
Data transfer rate	100 MB/s
System integration	Can be used for system protocols and for local programming
Number of ports	2
Communication ports	Copper Ethernet RJ-45
IRIG-B Connector	
Screw connection terminal block	Phoenix Contact MC 1,5/ 2-ST-3,5 BD:1-2
Maximum cross section (solid or stranded wire)	1.5 mm^2

9.1.3.10 RS-232 & serial fiber communication module

Table. 9.1.3.10 - 380. Technical data for the RS-232 & serial fiber communication module.

General information	
PP Hardware configuration code	L
PG Hardware configuration code	M
GP Hardware configuration code	N
GG Hardware configuration code	O
Serial fiber connections	

© Arcteq Relays Ltd
IM00014

Connection types	• Plastic - Plastic • Plastic - Glass • Glass - Plastic • Glass - Glass
Wavelength (plastic)	660 nm
Wavelength (glass)	820 nm
Cable type	1 mm plastic fiber
RS-232 terminal block connections	
Spring cage terminals block	Phoenix Contact DFMC 1,5/ 6-STF-3,5
Maximum cross section (solid or stranded wire)	1.5 mm^2

9.1.4 Display

Table. 9.1.4 - 381. Technical data for the HMI LCD display.

Dimensions and resolution	
Number of dots/resolution	320 x 160
Size	84.78 × 49.90 mm (3.34 × 1.96 in)
Display	
Type of display	LCD
Color	Monochrome

9.2 Functions

9.2.1 Protection functions

9.2.1.1 Non-directional overcurrent protection (I>; 50/51)

Table. 9.2.1.1 - 382. Technical data for the non-directional overcurrent function.

Measurement inputs	
Current inputs	Phase current inputs: I_{L1} (A), I_{L2} (B), I_{L3} (C)
Current input magnitudes	RMS phase currents TRMS phase currents Peak-to-peak phase currents
Pick-up	
Pick-up current setting	0.10…50.00 × I_n, setting step 0.01 × I_n
Inrush 2nd harmonic blocking	0.10…50.00 %I_{fund}, setting step 0.01 %I_{fund}

Inaccuracy: - Current - 2nd harmonic blocking	 ±0.5 %I_{set} or ±15 mA (0.10…4.0 × I_{set}) ±1.0 %-unit of the 2nd harmonic setting
Operation time	
Definite time function operating time setting	0.000…1800.000 s, setting step 0.005 s
Inaccuracy: - Definite time: I_m/I_{set} ratio > 3 - Definite time: I_m/I_{set} ratio = 1.05…3	 ±1.0 % or ±20 ms ±1.0 % or ±30 ms
IDMT setting parameters: - k Time dial setting for IDMT - A IDMT constant - B IDMT constant - C IDMT constant	 0.01…25.00, step 0.01 0…250.0000, step 0.0001 0…250.0000, step 0.0001 0…250.0000, step 0.0001
Inaccuracy: - IDMT operating time - IDMT minimum operating time	 ±1.5 % or ±20 ms ±20 ms
Retardation time (overshoot)	<30 ms
Instant operation time	
Start time and instant operation time (trip): - I_m/I_{set} ratio > 3 - I_m/I_{set} ratio = 1.05…3	 <35 ms (typically 25 ms) <50 ms
Reset	
Reset ratio	97 % of the pick-up current setting
Reset time setting Inaccuracy: Reset time	0.000…150.000 s, step 0.005 s ±1.0 % or ±50 ms
Instant reset time and start-up reset	<50 ms

NOTICE!
The release delay does not apply to phase-specific tripping!

9.2.1.2 Non-directional earth fault protection (I0>; 50N/51N)

Table. 9.2.1.2 - 383. Technical data for the non-directional earth fault function.

Measurement inputs	
Current input (selectable)	Residual current channel I_{01} (Coarse) Residual current channel I_{02} (Fine) Calculated residual current: I_{L1} (A), I_{L2} (B), I_{L3} (C)
Current input magnitudes	RMS residual current (I_{01}, I_{02} or calculated I_0) TRMS residual current (I_{01} or I_{02}) Peak-to-peak residual current (I_{01} or I_{02})
Pick-up	

© Arcteq Relays Ltd
IM00014

Used magnitude	Measured residual current I01 (1 A) Measured residual current I02 (0.2 A) Calculated residual current I0Calc (5 A)
Pick-up current setting	0.0001…40.00 × I_n, setting step 0.0001 × I_n
Inaccuracy: - Starting I01 (1 A) - Starting I02 (0.2 A) - Starting I0Calc (5 A)	 ±0.5 %$I0_{set}$ or ±3 mA (0.005…10.0 × I_{set}) ±1.5 %$I0_{set}$ or ±1.0 mA (0.005…25.0 × I_{set}) ±1.0 %$I0_{set}$ or ±15 mA (0.005…4.0 × I_{set})
Operating time	
Definite time function operating time setting	0.000…1800.000 s, setting step 0.005 s
Inaccuracy: - Definite time: I_m/I_{set} ratio > 3 - Definite time: I_m/I_{set} ratio = 1.05…3	 ±1.0 % or ±20 ms ±1.0 % or ±30 ms
IDMT setting parameters: - k Time dial setting for IDMT - A, B, C IDMT constants	 0.01…25.00, step 0.01 0…250.0000, step 0.0001
Inaccuracy: - IDMT operating time - IDMT minimum operating time	 ±1.5 % or ±20 ms ±20 ms
Retardation time (overshoot)	<30 ms
Instant operation time	
Start time and instant operation time (trip): - I_m/I_{set} ratio > 3.5 - I_m/I_{set} ratio = 1.05…3.5	 <50 ms (typically 35 ms) <55 ms
Reset	
Reset ratio	97 % of the pick-up current setting
Reset time setting Inaccuracy: Reset time	0.000…150.000 s, step 0.005 s ±1.0 % or ±50 ms
Instant reset time and start-up reset	<50 ms

NOTICE!
The operation and reset time accuracy does not apply when the measured secondary current in I02 is 1…20 mA. The pick-up is tuned to be more sensitive, and the operation times vary because of this.

9.2.1.3 Directional overcurrent protection (Idir>; 67)

Table. 9.2.1.3 - 384. Technical data for the directional overcurrent function.

Input signals	
Current inputs	Phase current inputs: I_{L1} (A), I_{L2} (B), I_{L3} (C)

Current input magnitudes	RMS phase currents TRMS phase currents Peak-to-peak phase currents
Current input calculations	Positive sequence current angle
Voltage inputs	U_{L1}, U_{L2}, U_{L3} U_{L12}, U_{L23}, U_{L31} + U0
Voltage input calculations	Positive sequence voltage angle
Pick-up	
Characteristic direction	Directional, non-directional
Operating sector center	-180.0…180.0 deg, setting step 0.1 deg
Operating sector size (+/-)	1.00…170.00 deg, setting step 0.10 deg
Pick-up current setting	0.10…40.00 × I_n, setting step 0.01 × I_n
Inaccuracy: - Current - U1/I1 angle (U > 15 V) - U1/I1 angle (U = 1…15 V)	 ±0.5 %I_{set} or ±15 mA (0.10…4.0 × I_{set}) ±0.20° ±1.5°
Operation time	
Definite time function operating time setting	0.000…1800.000 s, setting step 0.005 s
Inaccuracy: - Definite time: I_m/I_{set} ratio > 3 - Definite time: I_m/I_{set} ratio = 1.05…3	 ±1.0 % or ±20 ms ±1.0 % or ±35 ms
IDMT setting parameters: - k Time dial setting for IDMT - A IDMT constant - B IDMT constant - C IDMT constant	 0.01…25.00, step 0.01 0…250.0000, step 0.0001 0…250.0000, step 0.0001 0…250.0000, step 0.0001
Inaccuracy: - IDMT operating time - IDMT minimum operating time	 ±1.5 % or ±20 ms ±20 ms
Instant operation time	
Start time and instant operation time (trip): - I_m/I_{set} ratio > 3 - I_m/I_{set} ratio = 1.05…3	 <40 ms (typically 30 ms) <50 ms
Reset	
Reset ratio: - Current - U1/I1 angle	 97 % of the pick-up current setting 2.0°
Reset time setting Inaccuracy: Reset time	0.000…150.000 s, step 0.005 s ±1.0 % or ±50 ms
Instant reset time and start-up reset	<50 ms

© Arcteq Relays Ltd
IM00014

NOTICE!
The minimum voltage for direction solving is 1.0 V secondary. During three-phase short-circuits the angle memory is active for 0.5 seconds in case the voltage drops below 1.0 V.

9.2.1.4 Directional earth fault protection (I0dir>; 67N/32N)

Table. 9.2.1.4 - 385. Technical data for the directional earth fault function.

Measurement inputs	
Current input (selectable)	Residual current channel I_{01} (Coarse) Residual current channel I_{02} (Fine) Calculated residual current: I_{L1} (A), I_{L2} (B), I_{L3} (C)
Current input magnitudes	RMS residual current (I_{01}, I_{02} or calculated I_0) TRMS residual current (I_{01} or I_{02}) Peak-to-peak residual current (I_{01} or I_{02})
Voltage input (selectable)	Residual voltage from U3 or U4 voltage channel Residual voltage calculated from U_{L1}, U_{L2}, U_{L3}
Voltage input magnitudes	RMS residual voltage U_0 Calculated RMS residual voltage U_0
Pick-up	
Characteristic direction	Unearthed (Varmetric 90°) Petersen coil GND (Wattmetric 180°) *Earthed* (Adjustable sector)
When the *earthed* mode is active: - Tripping area center - Tripping area size (+/-)	 0.00…360.00 deg, setting step 0.10 deg 45.00…135.00 deg, setting step 0.10 deg
Pick-up current setting Pick-up voltage setting	0.005…40.00 × I_n, setting step 0.001 × I_n 1.00…75.00 %$U0_n$, setting step 0.01 %$U0_n$
Inaccuracy: - Starting I01 (1 A) - Starting I02 (0.2 A) - Starting I0Calc (5 A) - Voltage U0 and U0Calc - U0/I0 angle (U > 15 V) - U0/I0 angle (U = 1…15 V)	 ±0.5 %$I0_{set}$ or ±3 mA (0.005…10.0 × I_{set}) ±1.5 %$I0_{set}$ or ±1.0 mA (0.005…25.0 × I_{set}) ±1.5 %$I0_{set}$ or ±15 mA (0.005…4.0 × I_{set}) ±1.0 %$U0_{set}$ or ±30 mV ±0.2° (I0Calc ±1.0°) ±1.0°
Operation time	
Definite time function operating time setting	0.000…1800.000 s, setting step 0.005 s
Inaccuracy: - Definite time (I_m/I_{set} ratio 1.05→)	±1.0 % or ±45 ms
IDMT setting parameters: - k Time dial setting for IDMT - A IDMT constant - B IDMT constant - C IDMT constant	 0.01…25.00, step 0.01 0…250.0000, step 0.0001 0…250.0000, step 0.0001 0…250.0000, step 0.0001

Inaccuracy: - IDMT operating time - IDMT minimum operating time	 ±1.5 % or ±25 ms ±20 ms
Instant operation time	
Start time and instant operation time (trip): - I_m/I_{set} ratio > 3 - I_m/I_{set} ratio = 1.05…3	 <55 ms (typically 45 ms) <65 ms
Reset	
Current and voltage reset U0/I0 angle	97 % of the pick-up current and voltage setting 2.0°
Reset time setting Inaccuracy: Reset time	0.000…150.000 s, step 0.005 s ±1.0 % or ±45 ms
Instant reset time and start-up reset	<50 ms

9.2.1.5 Intermittent earth fault protection (I0int>; 67NT)

Table. 9.2.1.5 - 386. Technical data for the intermittent earth fault function.

Measurement inputs	
Current inputs (selectable)	Residual current channel I_{01} (Coarse) Residual current channel I_{02} (Fine)
Current input magnitudes	Residual current samples
Voltage inputs (selectable)	Residual voltage from U3 or U4 voltage channel
Voltage input magnitude	Zero sequence voltage samples
Pick-up settings	
Spikes to trip	1…50, setting step 1
Pick-up current setting Pick-up voltage setting	0.05…40.00 × I_n, setting step 0.001 × I_n 1.00…100.00 %$U0_n$, setting step 0.01 %$U0_n$
Pick-up inaccuracy	
Starting I01 (1 A) Starting I02 (0.2 A) Voltage U0	±0.5 %$I0_{set}$ or ±3 mA (0.005…10.0 x I_{set}) ±1.5 %$I0_{set}$ or ±1.0 mA (0.005…25.0 x I_{set}) ±1.0 %$U0_{set}$ or ±30 mV
Operation time setting	
Definite time function operating time setting	0.000…1800.000 s, setting step 0.005 s
Operation time inaccuracy	
Definite time: I_m/I_{set} ratio 1.05→	±1.0 % or ±30 ms
Instant operation time	
Start time and instant operation time (trip): - I_m/I_{set} ratio 1.05→	<15 ms

© Arcteq Relays Ltd
IM00014

Reset time	
Reset time setting (FWD and REV) Inaccuracy: Reset time	0.000…1800.000 s, step 0.005 s ±1.0 % or ±35 ms
Instant reset time and start-up reset	<50 ms

9.2.1.6 Negative sequence overcurrent/ phase current reversal/ current unbalance protection (I2>; 46/46R/46L)

Table. 9.2.1.6 - 387. Technical data for the current unbalance function.

Measurement inputs	
Current inputs	Phase current inputs: I_{L1} (A), I_{L2} (B), I_{L3} (C)
Current input calculations	Positive sequence current (I1) Negative sequence current (I2)
Pick-up	
Used magnitude	Negative sequence component I2pu Relative unbalance I2/I1
Pick-up setting	0.01…40.00 × I_n, setting step 0.01 × I_n (I2pu) 1.00…200.00 %, setting step 0.01 % (I2/I1)
Minimum phase current (at least one phase above)	0.01…2.00 × I_n, setting step 0.01 × I_n
Inaccuracy: - Starting I2pu - Starting I2/I1	 ±1.0 %-unit or ±100 mA (0.10…4.0 × I_n) ±1.0 %-unit or ±100 mA (0.10…4.0 × I_n)
Operating time	
Definite time function operating time setting	0.000…1800.000 s, setting step 0.005 s
Inaccuracy: - Definite time (I_m/I_{set} ratio > 1.05)	 ±1.5 % or ±60 ms
IDMT setting parameters: - k Time dial setting for IDMT - A IDMT Constant - B IDMT Constant - C IDMT Constant	 0.01…25.00, step 0.01 0…250.0000, step 0.0001 0…250.0000, step 0.0001 0…250.0000, step 0.0001
Inaccuracy: - IDMT operating time - IDMT minimum operating time	 ±2.0 % or ±30 ms ±20 ms
Retardation time (overshoot)	<5 ms
Instant operation time	
Start time and instant operation time (trip): - I_m/I_{set} ratio > 1.05	 <70 ms
Reset	
Reset ratio	97 % of the pick-up setting

Reset time setting Inaccuracy: Reset time	0.000…150.000 s, step 0.005 s ±1.5 % or ±60 ms
Instant reset time and start-up reset	<55 ms

9.2.1.7 Harmonic overcurrent protection (Ih>; 50H/51H/68H)

Table. 9.2.1.7 - 388. Technical data for the harmonic overcurrent function.

Measurement inputs	
Current inputs	Phase current inputs: I_{L1} (A), I_{L2} (B), I_{L3} (C) Residual current channel I_{01} (Coarse) Residual current channel I_{02} (Fine)
Pick-up	
Harmonic selection	2nd, 3rd, 4th, 5th, 6th 7th, 9th, 11th, 13th, 15th, 17th or 19th
Used magnitude	Harmonic per unit (× I_N) Harmonic relative (Ih/IL)
Pick-up setting	0.05…2.00 × I_N, setting step 0.01 × I_N (× I_N) 5.00…200.00 %, setting step 0.01 % (Ih/IL)
Inaccuracy: - Starting × I_N - Starting × Ih/IL	 <0.03 × I_N (2nd, 3rd, 5th) <0.03 × I_N tolerance to Ih (2nd, 3rd, 5th)
Operation time	
Definite time function operating time setting	0.000…1800.000 s, setting step 0.005 s
Inaccuracy: - Definite time (I_M/I_{SET} ratio >1.05)	 ±1.0 % or ±35 ms
IDMT setting parameters: k Time dial setting for IDMT A IDMT constant B IDMT constant C IDMT constant	 0.01…25.00, step 0.01 0…250.0000, step 0.0001 0…250.0000, step 0.0001 0…250.0000, step 0.0001
Inaccuracy: - IDMT operating time - IDMT minimum operating time	 ±1.5 % or ±20 ms ±20 ms
Instant operation time	
Start time and instant operation time (trip): I_M/I_{SET} ratio >1.05	 <50 ms
Reset	
Reset ratio	95 % of the pick-up setting
Reset time setting Inaccuracy: Reset time	0.000…150.000 s, step 0.005 s ±1.0 % or ±35 ms
Instant reset time and start-up reset	<50 ms

© Arcteq Relays Ltd
IM00014

NOTICE!
Harmonics generally: The amplitude of the harmonic content must be least 0.02 × I_N when the relative mode (Ih/IL) is used!
Blocking: To achieve fast activation for blocking purposes with the harmonic overcurrent stage, note that the harmonic stage may be activated by a rapid load change or fault situation. An intentional activation lasts for approximately 20 ms if a harmonic component is not present. The harmonic stage stays active if the harmonic content is above the pick-up limit.
Tripping: When using the harmonic overcurrent stage for tripping, please ensure that the operation time is set to 20 ms (DT) or longer to avoid nuisance tripping caused by the above-mentioned reasons.

9.2.1.8 Circuit breaker failure protection (CBFP; 50BF/52BF)

Table. 9.2.1.8 - 389. Technical data for the circuit breaker failure protection function.

Measurement inputs	
Current inputs	Phase current inputs: I_{L1} (A), I_{L2} (B), I_{L3} (C) Residual current channel I_{01} (Coarse) Residual current channel I_{02} (Fine)
Current input magnitudes	RMS phase currents RMS residual current (I_{01}, I_{02} or calculated I_0)
Pick-up	
Monitored signals	Digital input status, digital output status, logical signals
Pick-up current setting: - IL1…IL3 - I01, I02, I0Calc	 0.10…40.00 × I_N, setting step 0.01 × I_N 0.005…40.00 × I_N, setting step 0.005 × I_N
Inaccuracy: - Starting phase current (5A) - Starting I01 (1 A) - Starting I02 (0.2 A) - Starting I0Calc (5 A)	 ±0.5 %I_{SET} or ±15 mA (0.10…4.0 × I_{SET}) ±0.5 %$I0_{SET}$ or ±3 mA (0.005…10.0 × I_{SET}) ±1.5 %$I0_{SET}$ or ±1.0 mA (0.005…25.0 × I_{SET}) ±1.0 %$I0_{SET}$ or ±15 mA (0.005…4.0 × I_{SET})
Operation time	
Definite time function operating time setting	0.050…1800.000 s, setting step 0.005 s
Inaccuracy: - Current criteria (I_M/I_{SET} ratio 1.05→) - DO or DI only	 ±1.0 % or ±55 ms ±15 ms
Reset	
Reset ratio	97 % of the pick-up current setting
Reset time	<50 ms

9.2.1.9 Low-impedance or high-impedance restricted earth fault/ cable end differential protection (I0d>; 87N)

Table. 9.2.1.9 - 390. Technical data for the restricted earth fault/cable end differential function.

Measurement inputs	
Current inputs	Phase current inputs: I_{L1} (A), I_{L2} (B), I_{L3} (C) Residual current channel I_{01} (Coarse) Residual current channel I_{02} (Fine)
Current input calculations	Calculated bias and residual differential currents
Pick-up	
Operating modes	Restricted earth fault Cable end differential
Characteristics	Biased differential with 3 settable sections and 2 slopes
Pick-up current sensitivity setting Slope 1 Slope 2 Bias (Turnpoint 1 & 2)	0.01…50.00 % (I_N), setting step 0.01 % 0.00…150.00 %, setting step 0.01 % 0.00…250.00 %, setting step 0.01 % 0.01…50.00 × I_N, setting step 0.01 × I_N
Inaccuracy - Starting	±3% of the set pick-up value > 0.5 × I_N setting. ±5 mA < 0.5 × I_N setting
Operation time	
Instant operation time 1.05 x I_{SET}	<30 ms
Reset	
Reset ratio	No hysteresis
Reset time	<40 ms

9.2.1.10 Overvoltage protection (U>; 59)

Table. 9.2.1.10 - 391. Technical data for the overvoltage function.

Measurement inputs	
Voltage inputs	U_{L1}, U_{L2}, U_{L3} U_{L12}, U_{L23}, U_{L31} (+ U_0)
Voltage input magnitudes	RMS line-to-line or line-to-neutral voltages
Pick-up	
Pick-up terms	1 voltage 2 voltages 3 voltages
Pick-up setting	50.00…150.00 %U_N, setting step 0.01 %U_N

© Arcteq Relays Ltd
IM00014

Inaccuracy: - Voltage	±1.5 %U_{SET}
Operating time	
Definite time function operating time setting	0.000…1800.000 s, setting step 0.005 s
Inaccuracy: - Definite time (U_M/U_{SET} ratio 1.05→)	±1.0 % or ±35 ms
IDMT setting parameters: - k Time dial setting for IDMT - IDMT Multiplier	0.01…60.00, step0.01 0…25.00, step 0.01
Inaccuracy: - IDMT operating time - IDMT minimum operating time	±1.5 % or ±20 ms ±20 ms
Instant operation time	
Start time and instant operation time (trip): - U_M/U_{SET} ratio 1.05→	<50 ms
Reset	
Reset ratio	97 % of the pick-up voltage setting
Reset time setting Inaccuracy: Reset time	0.000…150.000 s, step 0.005 s ±1.0 % or ±45 ms
Instant reset time and start-up reset	<50 ms

9.2.1.11 Undervoltage protection (U<; 27)

Table. 9.2.1.11 - 392. Technical data for the undervoltage function.

Measurement inputs	
Voltage inputs	U_{L1}, U_{L2}, U_{L3} U_{L12}, U_{L23}, U_{L31} (+ U_0)
Voltage input magnitudes	RMS line-to-line or line-to-neutral voltages
Pick-up	
Pick-up terms	1 voltage 2 voltages 3 voltages
Pick-up setting	0.00…120.00 %U_N, setting step 0.01 %U_N
Inaccuracy: - Voltage	±1.5 %U_{SET} or ±30 mV
Low voltage block	
Pick-up setting	0.00…80.00 %U_N, setting step 0.01 %U_N
Inaccuracy: - Voltage	±1.5 %U_{SET} or ±30 mV

Operation time	
Definite time function operating time setting	0.000…1800.000 s, setting step 0.005 s
Inaccuracy: - Definite time (U_M/U_{SET} ratio 1.05→)	±1.0 % or ±35 ms
IDMT setting parameters: - k Time dial setting for IDMT - IDMT Multiplier	0.01…60.00, step 0.01 0…25.00, step 0.01
Inaccuracy: - IDMT operating time - IDMT minimum operating time	±1.5 % or ±20 ms ±20 ms
Instant operation time	
Start time and instant operation time (trip): - U_M/U_{SET} ratio 1.05→	<65 ms
Retardation time (overshoot)	<30 ms
Reset	
Reset ratio	103 % of the pick-up voltage setting
Reset time setting Inaccuracy: Reset time	0.000…150.000 s, step 0.005 s ±1.0 % or ±45 ms
Instant reset time and start-up reset	<50 ms

NOTICE!
The low-voltage block is not in use when its pick-up setting is set to 0 %. The undervoltage function trip signal is active when the LV block is disabled, and the device has no voltage injection.

NOTICE!
After the low voltage blocking condition, the undervoltage stage does not trip unless the voltage exceeds the pick-up setting first.

9.2.1.12 Neutral overvoltage protection (U0>; 59N)

Table. 9.2.1.12 - 393. Technical data for the neutral overvoltage function.

Measurement inputs	
Voltage input (selectable)	Residual voltage from U3 or U4 voltage channel Residual voltage calculated from U_{L1}, U_{L2}, U_{L3}
Voltage input magnitudes	RMS residual voltage U_0 Calculated RMS residual voltage U_0
Pick-up	
Pick-up voltage setting	1.00…50.00 % $U0_N$, setting step 0.01 × I_N

© Arcteq Relays Ltd
IM00014

Inaccuracy: - Voltage U0 - Voltage U0Calc	±1.5 %$U0_{SET}$ or ±30 mV ±150 mV
Operation time	
Definite time function operating time setting	0.000…1800.000 s, setting step 0.005 s
Inaccuracy: - Definite time ($U0_M/U0_{SET}$ ratio 1.05→)	±1.0 % or ±45 ms
IDMT setting parameters: - k Time dial setting for IDMT - IDMT Multiplier	0.01…60.00, step 0.01 0…25.00, step 0.01
Inaccuracy: - IDMT operating time - IDMT minimum operating time	±1.5 % or ±20 ms ±20 ms
Instant operation time	
Start time and instant operation time (trip): - $U0_M/U0_{SET}$ ratio 1.05→	<50 ms
Reset	
Reset ratio	97 % of the pick-up voltage setting
Reset time setting Inaccuracy: Reset time	0.000 … 150.000 s, step 0.005 s ±1.0 % or ±50 ms
Instant reset time and start-up reset	<50 ms

9.2.1.13 Sequence voltage protection (U1/U2>/<; 47/27P/59NP)

Table. 9.2.1.13 - 394. Technical data for the sequence voltage function.

Measurement inputs	
Voltage inputs	U_{L1}, U_{L2}, U_{L3} U_{L12}, U_{L23}, U_{L31} (+ U_0)
Voltage input calculations	Positive sequence voltage (I1) Negative sequence voltage (I2)
Pick-up	
Pick-up setting	5.00…150.00 %U_N, setting step 0.01 %U_N
Inaccuracy: - Voltage	±1.5 %U_{SET} or ±30 mV
Low voltage block	
Pick-up setting	1.00…80.00 %U_N, setting step 0.01 %U_N
Inaccuracy: -Voltage	±1.5 %U_{SET} or ±30 mV
Operation time	

Definite time function operating time setting	0.000…1800.000 s, setting step 0.005 s
Inaccuracy -Definite Time (U_M/U_{SET} ratio 1.05→)	±1.0 % or ±35 ms
IDMT setting parameters: - k Time dial setting for IDMT - IDMT Multiplier	0.01…60.00, step 0.01 0…25.00, step 0.01
Inaccuracy: - IDMT operating time - IDMT minimum operating time	±1.5 % or ±20 ms ±20 ms
Instant operation time	
Start time and instant operation time (trip): - U_M/U_{SET} ratio <0.95/1.05→	<65 ms
Reset	
Reset ratio	97 or 103 % of the pick-up voltage setting
Reset time setting Inaccuracy: Reset time	0.000…150.000 s, step 0.005 s ±1.0 % or ±35 ms
Instant reset time and start-up reset	<50 ms

9.2.1.14 Overfrequency and underfrequency protection (f>/<; 81O/81U)

Table. 9.2.1.14 - 395. Technical data for the overfrequency and underfrequency function.

Input signals	
Sampling mode	Fixed Tracking
Frequency reference 1 Frequency reference 2 Frequency reference 3	CT1IL1, CT2IL1, VT1U1, VT2U1 CT1IL2, CT2IL2, VT1U2, VT2U2 CT1IL3, CT2IL3, VT1U3, VT2U3
Pick-up	
f> pick-up setting f< pick-up setting	10.00…70.00 Hz, setting step 0.01 Hz 7.00…65.00 Hz, setting step 0.01 Hz
Inaccuracy (sampling mode): - Fixed - Tracking	±20 mHz (50/60 Hz fixed frequency) ±20 mHz (U > 30 V secondary) ±20 mHz (I > 30 % of rated secondary)
Operation time	
Definite time function operating time setting	0.000…1800.000 s, setting step 0.005 s
Inaccuracy: - Definite time (I_M/I_{SET} ratio +/- 50 mHz)	±1.5 % or ±50 ms (max. step size: 100 mHz)
Instant operation time	

© Arcteq Relays Ltd
IM00014

Start time and instant operation time (trip): - I_M/I_{SET} ratio +/- 50 mHz (Fixed) - I_M/I_{SET} ratio +/- 50 mHz (Tracking)	<70 ms (max. step size: 100 mHz) <3 cycles or <60 ms (max. step size: 100 mHz)
Reset	
Reset ratio	0.020 Hz
Instant reset time and start-up reset: - I_M/I_{SET} ratio +/- 50 mHz (Fixed) - I_M/I_{SET} ratio +/- 50 mHz (Tracking)	<110 ms (max. step size: 100 mHz) <3 cycles or <70 ms (max. step size: 100 mHz)

NOTICE!
Measuring frequency requires that the secondary voltage exceeds 2 volts, or the current exceeds 0.25 amperes (peak-to peak).

NOTICE!
The frequency is measured two seconds after a signal is received.

9.2.1.15 Rate-of-change of frequency protection (df/dt>/<; 81R)

Table. 9.2.1.15 - 396. Technical data of the rate-of-change of frequency function.

Input signals	
Sampling mode	Fixed Tracking
Frequency reference 1 Frequency reference 2 Frequency reference 3	CT1IL1, CT2IL1, VT1U1, VT2U1 CT1IL2, CT2IL2, VT1U2, VT2U2 CT1IL3, CT2IL3, VT1U3, VT2U3
Pick-up	
Df/dt>/< pick-up setting	0.15…1.00 Hz/s, setting step 0.01 Hz
f> limit	10.00…70.00 Hz, setting step 0.01 Hz
f< limit	7.00…65.00 Hz, setting step 0.01 Hz
Pick-up inaccuracy	
Df/dt	±5.0 %I_{SET} or ±20 mHz/s
Frequency	±15 mHz (U > 30 V secondary) ±20 mHz (I > 30 % of rated secondary)
Operation time	
Definite time function operating time setting	0.000…1800.000 s, setting step 0.005 s
Inaccuracy: - Definite time (I_M/I_{SET} ratio +/- 50 mHz)	±1.5 % or ±110 ms (max. step size: 100 mHz)
Start time and instant operation time (trip):	
f_M/f_{SET} ratio +/- 20 mHz (overreach)	<180 ms

f_M/f_{SET} ratio +/- 200 mHz (overreach)	<90 ms
Reset	
Reset ratio (frequency limit)	0.020 Hz
Instant reset time and start-up reset - f_M/f_{SET} ratio +/- 50 mHz	<2 cycles or <60 ms (max. step size: 100 mHz)

NOTICE!
The frequency is measured two seconds after a signal is received.

9.2.1.16 Line thermal overload protection (TF>; 49F)

Table. 9.2.1.16 - 397. Technical data for the line thermal overload protection function.

Measurement inputs	
Current inputs	Phase current inputs: I_{L1} (A), I_{L2} (B), I_{L3} (C)
Current input magnitudes	TRMS phase currents (up to the 31st harmonic)
Settings	
Time constants τ	1
Time constant value	0.0…500.00 min, step 0.1 min
Service factor (maximum overloading)	0.01…5.00 × I_N, step 0.01 × I_N
Thermal model biasing	- Ambient temperature (Set –60.0…500.0 deg, step 0.1 deg and RTD) - Negative sequence current
Thermal replica temperature estimates	Selectable between °C and °F
Outputs	
- Alarm 1 - Alarm 2 - Thermal trip - Trip delay - Restart inhibit	0…150 %, step 1 % 0…150 %, step 1 % 0…150 %, step 1 % 0.000…3600.000 s, step 0.005 s 0…150 %, step 1 %
Inaccuracy	
- Starting - Operating time	±0.5 % of the set pick-up value ±5 % or ± 500 ms

9.2.1.17 Overpower (P>; 32O), underpower (P<; 32U) and reverse power (Pr; 32R) protection

Table. 9.2.1.17 - 398. Technical data for the power protection functions.

Measurement inputs

© Arcteq Relays Ltd
IM00014

Current inputs	Phase current inputs: I_{L1} (A), I_{L2} (B), I_{L3} (C)
Voltage inputs	U_{L1}, U_{L2}, U_{L3} U_{L12}, U_{L23}, U_{L31} (+ U_0)
Calculated measurement	Three-phase active power
Pick-up	
P> Prev>	0.10…150 000.00 kW, setting step 0.01 kW -15 000.00…-1.00 kW, setting step 0.01 kW
P< Low-power blocking P_{SET}<	0.00…150 000.00 kW, setting step 0.01 kW 0.00…100 000.00 kW, setting step 0.01 kW
Inaccuracy: - Active power	Typically <1.0 %P_{SET}
Operation time	
Definite time function operating time setting	0.000…1800.000 s, setting step 0.005 s
Inaccuracy: - Definite time (P_M/P_{SET} ratio 1.05→)	±1.0 % or ±35 ms
Instant operation time	
Start time and instant operation time (trip): - P_M/P_{SET} ratio 1.05→	<50 ms
Reset	
Reset ratio	97 or 103 %P_{SET}
Reset time setting Inaccuracy: Reset time	0.000…150.000 s, step 0.005 s ±1.0 % or ±35 ms
Instant reset time and start-up reset	<50 ms

9.2.1.18 Voltage-restrained overcurrent protection (Iv>; 51V)

Table. 9.2.1.18 - 399. Technical data for the voltage-restrained overcurrent protection function.

Measurement inputs	
Current inputs	Phase current inputs: I_{L1} (A), I_{L2} (B), I_{L3} (C)
Current input magnitudes	RMS phase currents
Voltage inputs	U_{L1}, U_{L2}, U_{L3} U_{L12}, U_{L23}, U_{L31} + U_0
Voltage input calculation	Positive sequence voltage
Pick-up	
Pick-up current setting (point 1 & 2)	0.10…40.00 × I_N, setting step 0.01 × I_N
Pick-up voltage setting (point 1 & 2)	0.05…150.00 %U_N, setting step 0.01 %U_N

Inaccuracy: - Current - Voltage	±0.5 %I_{SET} or ±15 mA (0.10…4.0 × I_{SET}) ±1.5 %U_{SET} or ±30 mV
Operation time	
Definite time function operating time setting	0.000…1800.000 s, setting step 0.005 s
Inaccuracy: - Definite time (I_M/I_{SET} ratio 1.05→)	±1.0 % or ±25 ms
IDMT setting parameters: k Time dial setting for IDMT A IDMT constant B IDMT constant C IDMT constant	 0.01…25.00, step 0.01 0…250.0000, step 0.0001 0…250.0000, step 0.0001 0…250.0000, step 0.0001
Inaccuracy: - IDMT operating time - IDMT minimum operating time	 ±1.5 % or ±20 ms ±20 ms
Instant operation time	
Start time and instant operation time (trip): - I_M/I_{SET} ratio 1.05→	 <40 ms
Reset	
Reset ratio: - Current	 97 % of the pick-up current setting
Reset time setting Inaccuracy: Reset time	0.000…150.000 s, step 0.005 s ±1.0 % or ±25 ms
Instant reset time and start-up reset	<45 ms

9.2.1.19 Resistance temperature detectors (RTD)

Table. 9.2.1.19 - 400. Technical data of the resistance temperature detectors.

Inputs	
Resistance input magnitudes	Measured temperatures measured by RTD sensors
RTD channels	12 individual RTD channels
Settable alarms	24 alarms available (two per each RTD channel)
Pick-up	
Alarm setting range Inaccuracy Reset ratio	101.00…2000.00 deg, setting step 0.1 deg (either < or > setting) ±3 % of the set pick-up value 97 % of the pick-up setting
Operation	
Operating time	Typically <500 ms

© Arcteq Relays Ltd
IM00014

9.2.1.20 Arc fault protection (IArc>/I0Arc>; 50Arc/50NArc) (optional)

Table. 9.2.1.20 - 401. Technical data for the arc fault protection function.

Measurement inputs	
Current inputs	Phase current inputs: I_{L1} (A), I_{L2} (B), I_{L3} (C) Residual current channel I_{01} (Coarse) Residual current channel I_{02} (Fine)
Current input magnitudes	Sample-based phase current measurement Sample-based residual current measurement
Arc point sensor inputs	Channels S1, S2, S3, S4 (pressure and light sensor, or light-only sensor) Up to three (3) sensors per channel
System frequency operating range	6.00…75.00 Hz
Pick-up	
Pick-up current setting (phase current) Pick-up current setting (residual current) Pick-up light intensity	0.05…40.00 × I_N, setting step 0.01 × I_N 0.05…40.00 × I_N, setting step 0.01 × I_N 8, 25 or 50 kLx (the sensor is selected in the order code)
Starting inaccuracy (IArc> and I0Arc>)	±3 % of the set pick-up value > 0.5 × I_N setting. 5 mA < 0.5 × I_N setting.
Point sensor detection radius	180 degrees
Operation time	
Light only: - Semiconductor outputs HSO1 and HSO2 - Regular relay outputs	Typically 7 ms (3…12 ms) Typically 10 ms (6.5…15 ms)
Light + current criteria (zone 1…4): - Semiconductor outputs HSO1 and HSO2 - Regular relay outputs	Typically 10 ms (6.5…14 ms) Typically 14 ms (10…18 ms)
Arc BI only: - Semiconductor outputs HSO1 and HSO2 - Regular relay outputs	Typically 7 ms (2…12 ms) Typically 10 ms (6.5…15 ms)

9.2.1.21 Voltage memory

Table. 9.2.1.21 - 402. Technical data for the voltage memory function.

Measurement inputs	
Voltage inputs	U_{L1}, U_{L2}, U_{L3} U_{L12}, U_{L23}, U_{L31} + U_0
Current inputs (back-up frequency)	Phase current inputs: I_{L1} (A), I_{L2} (B), I_{L3} (C)
Pick-up	

Pick-up voltage setting Pick-up current setting (optional)	2.00…50.00 %U_N, setting step 0.01 x %U_N 0.01…50.00 × I_N, setting step 0.01 × I_N
Inaccuracy: - Voltage - Current	 ±1.5 %U_{SET} or ±30 mV ±0.5 %I_{SET} or ±15 mA (0.10…4.0 × I_{SET})
Operation time	
Angle memory activation delay	<20 ms (typically 5 ms)
Maximum active time	0.020…50.000 s, setting step 0.005 s
Inaccuracy: - Definite time (U_M/U_{SET} ratio >1.05)	 ±1.0 % or ±35 ms
Angle memory	
Angle drift while voltage is absent	±1.0° per 1 second
Reset	
Reset ratio: - Voltage memory (voltage) - Voltage memory (current)	 103 % of the pick-up voltage setting 97 % of the pick-up current setting
Reset time	<50 ms

NOTICE!
Voltage memory is activated only when all line voltages fall below set pick-up value.

NOTICE!
Voltage memory activation captures healthy situation voltage angles, one cycle before actual activation (50Hz/20ms before “bolted” fault)

9.2.2 Control functions

9.2.2.1 Setting group selection

Table. 9.2.2.1 - 403. Technical data for the setting group selection function.

Settings and control modes	
Setting groups	8 independent, control-prioritized setting groups
Control scale	Common for all installed functions which support setting groups
Control mode	
Local	Any binary signal available in the device
Remote	Force change overrule of local controls either from the setting tool, HMI or SCADA
Operation time	
Reaction time	<5 ms from receiving the control signal

© Arcteq Relays Ltd

9.2.2.2 Object control and monitoring

Table. 9.2.2.2 - 404. Technical data for the object control and monitoring function.

General	
Number of objects	5
Supported object types	Circuit breaker Circuit breaker with withdrawable cart Disconnector (MC) Disconnector (GND)
Signals	
Input signals	Digital inputs Software signals
Output signals	Close command output Open command output
Operation time	
Breaker traverse time setting	0.02…500.00 s, setting step 0.02 s
Max. close/open command pulse length	0.02…500.00 s, setting step 0.02 s
Control termination time out setting	0.02…500.00 s, setting step 0.02 s
Inaccuracy: - Definite time operating time	±0.5 % or ±10 ms
Breaker control operation time	
External object control time	<75 ms
Object control during auto-reclosing	See the technical sheet for the auto-reclosing function.

9.2.2.3 Indicator object monitoring

Table. 9.2.2.3 - 405. Technical data for the indicator object monitoring function.

General	
Number of objects	5
Supported object types	Disconnector (GND)
Signals	
Input signals	Digital inputs Software signals

9.2.2.4 Auto-reclosing (0 → 1; 79)

Table. 9.2.2.4 - 406. Technical data for the auto-reclosing function.

Input signals	
Input signals	Software signals (protection, logics, etc.) Binary inputs
Requests	
REQ1-5	5 priority request inputs; can be set parallel as signals to each request
Shots	
1-5 shots	5 independent or scheme-controlled shots in each AR request
Operation time	
Operating time settings: - Lockout after successful AR - Object close reclaim time - AR shot starting delay - AR shot dead time delay - AR shot action time - AR shot specific reclaim time	 0.000…1800.000 s, setting step 0.005 s 0.000…1800.000 s, setting step 0.005 s 0.000…1800.000 s, setting step 0.005 s 0.000…1800.000 s, setting step 0.005 s 0.000…1800.000 s, setting step 0.005 s 0.000…1800.000 s, setting step 0.005 s
Inaccuracy	
AR starting (from a protection stage's START signal)	±1.0 % or ±30 ms (AR delay)
AR starting (from a protection stage's TRIP signal)	Trip delay inaccuracy +25 ms (Protection + AR delay)
Dead time	±1.0 % or ±35 ms (AR delay)
Action time	±1.0 % or ±30 ms (AR delay)
Instant starting time	
Instant operation time	Protection activation delay + 15 ms (Protection + AR delay)

9.2.2.5 Cold load pick-up (CLPU)

Table. 9.2.2.5 - 407. Technical data for the cold load pick-up function.

Measurement inputs	
Current inputs	Phase current inputs: I_{L1} (A), I_{L2} (B), I_{L3} (C)
Current input magnitudes	RMS phase currents
Pick-up	
Pick-up current setting - $I_{LOW}/I_{HIGH}/I_{OVER}$	0.01…40.00 × I_N, setting step 0.01 × I_N

© Arcteq Relays Ltd
IM00014

Reset ratio	97 % of the pick-up current setting
Inaccuracy: - Current	±0.5 %I_{SET} or ±15 mA (0.10…4.0 × I_{SET})
Operation time	
Definite time function operating time settings: - t_{SET} - t_{MAX} - t_{MIN}	0.000…1800.000 s, setting step 0.005 s 0.000…1800.000 s, setting step 0.005 s 0.000…1800.000 s, setting step 0.005 s
Inaccuracy: - Definite time (I_M/I_{SET} ratio = 1.05/0.95)	±1.0 % or ±45 ms
Instant operation time	
CLPU activation and release	<45 ms (measured from the trip contact)

NOTICE!
A single-phase current (IL1, IL2 or IL3) is enough to prolong or release the blocking during an overcurrent condition.

9.2.2.6 Switch-on-to-fault (SOTF)

Table. 9.2.2.6 - 408. Technical data for the switch-on-to-fault function.

Initialization signals	
SOTF activate input	Any blocking input signal (Object closed signal, etc.)
Pick-up	
SOTF function input	Any blocking input signal (I> or similar)
SOTF activation time	
Activation time	<40 ms (measured from the trip contact)
SOTF release time	
Release time setting	0.000…1800.000 s, setting step 0.005 s
Inaccuracy: - Definite time	±1.0 % or ±30 ms
SOTF instant release time	<40 ms (measured from the trip contact)

9.2.2.7 Zero sequence recloser (79N)

Table. 9.2.2.7 - 409. Technical data for the zero sequence recloser function.

Measurement inputs	
Voltage input	Residual voltage from U4 voltage channel

Voltage input magnitudes	RMS residual voltage U_0
Reset	
Reset time setting Inaccuracy: Reset time	0.000…150.000 s, step 0.005 s ±1.0 % or ±35 ms

NOTICE!
The zero sequence recloser is a combined function of the U0> (neutral overvoltage) protection, the programmable object (breaker) and the recloser itself.

9.2.2.8 Vector jump (Δφ; 78)

Table. 9.2.2.8 - 410. Technical data for the vector jump protection function.

Measurement inputs	
Voltage inputs	U_{L1}, U_{L2}, U_{L3} U_{L12}, U_{L23}, U_{L31} + U_0
Monitored voltages	Any or all system line-to-line voltage(s) Any or all system line-to-neutral voltage(s) Specifically chosen line-to-line or line-to-neutral voltage U4 channel voltage
Pick-up	
Pick-up setting	0.05…30.00°, setting step 0.01°
Inaccuracy: - Voltage angle	±30% overreach or 1.00 °
Low-voltage blocking	
Pick-up setting	0.01…100.00 %U_N, setting step 0.01 %U_N
Inaccuracy: - Voltage	±1.5 %U_{SET} or ±30 mV
Instant operation time	
Alarm and trip operation time: - (Im/Iset ratio > ±30% overreach or 1.00 °)	<40 ms (typically 30 ms) 50/60 Hz <50 ms (typically 40 ms) 16.67 Hz
Reset	
Trip pulse	~5-10ms

9.2.2.9 Synchrocheck (ΔV/Δa/Δf; 25)

Table. 9.2.2.9 - 411. Technical data for the synchrocheck function.

Input signals	
Voltage inputs	U1, U2, U3 or U4 voltage channel

© Arcteq Relays Ltd
IM00014

Voltage input magnitudes	RMS line-to-line or line-to-neutral voltages U3 or U4 voltage channel RMS
Pick-up	
U diff < setting	2.00…50.00 %U_N, setting step 0.01 %U_N
Angle diff < setting	3.0…90.0 deg, setting step 0.10 deg
Freq diff < setting	0.05…0.50 Hz, setting step 0.01 Hz
Inaccuracy: - Voltage - Frequency - Angle	 ±3.0 %U_{SET} or ±0.3 %U_N ±25 mHz (U> 30 V secondary) ±1.5° (U> 30 V secondary)
Reset	
Reset ratio: - Voltage - Frequency - Angle	 99 % of the pick-up voltage setting 20 mHz ±2.0°
Activation time	
Activation (to LD/DL/DD) Activation (to Live Live)	<35 ms <60 ms
Reset	<40 ms
Bypass modes	
Voltage check mode (excluding LL)	LL+LD, LL+DL, LL+DD, LL+LD+DL, LL+LD+DD, LL+DL+DD, bypass
U live > limit U dead < limit	0.10…100.00 %U_N, setting step 0.01 %U_N 0.00…100.00 %U_N, setting step 0.01 %U_N

NOTICE!
The minimum voltage for direction and frequency solving is 20.0 %U_N.

9.2.3 Monitoring functions

9.2.3.1 Current transformer supervision

Table. 9.2.3.1 - 412. Technical data for the current transformer supervision function.

Measurement inputs	
Current inputs	Phase current inputs: I_{L1} (A), I_{L2} (B), I_{L3} (C) Residual current channel I_{01} (Coarse) (optional) Residual current channel I_{02} (Fine) (optional)
Current input magnitudes	RMS phase currents RMS residual current (I_{01}, I_{02}) (optional)
Pick-up	

Pick-up current settings: - I_{SET} high limit - I_{SET} low limit - I_{SUM} difference - I_{SET} ratio - I2/I1 ratio	0.10…40.00 × I_N, setting step 0.01 × I_N 0.10…40.00 × I_N, setting step 0.01 × I_N 0.10…40.00 × I_N, setting step 0.01 × I_N 0.01…100.00 %, setting step 0.01 % 0.01…100.00 %, setting step 0.01 %
Inaccuracy: - Starting IL1, IL2, IL3 - Starting I2/I1 - Starting I01 (1 A) - Starting I02 (0.2 A)	±0.5 %I_{SET} or ±15 mA (0.10…4.0 × I_{SET}) ±1.0 %$I2_{SET}$ / $I1_{SET}$ or ±100 mA (0.10…4.0 × I_N) ±0.5 %$I0_{SET}$ or ±3 mA (0.005…10.0 × I_{SET}) ±1.5 %$I0_{SET}$ or ±1.0 mA (0.005…25.0 × I_{SET})
Time delay for alarm	
Definite time function operating time setting	0.000…1800.000 s, setting step 0.005 s
Inaccuracy_ - Definite time (I_M/I_{SET} ratio > 1.05)	±2.0 % or ±80 ms
Instant operation time (alarm): - I_M/I_{SET} ratio > 1.05	<80 ms
Reset	
Reset ratio	97/103 % of the pick-up current setting
Instant reset time and start-up reset	<80 ms

9.2.3.2 Voltage transformer supervision (60)

Table. 9.2.3.2 - 413. Technical data for the voltage transformer supervision function.

Measurement inputs	
Voltage inputs	U_{L1}, U_{L2}, U_{L3} U_{L12}, U_{L23}, U_{L31}
Voltage input magnitudes	RMS line-to-line or line-to-neutral voltages
Pick-up	
Pick-up settings: - Voltage (low pick-up) - Voltage (high pick-up) - Angle shift limit	0.05…0.50 × U_N, setting step 0.01 × U_N 0.50…1.10 × U_N, setting step 0.01 × U_N 2.00…90.00 deg, setting step 0.10 deg
Inaccuracy: - Voltage - U angle (U> 1 V)	±1.5 %U_{SET} ±1.5°
External line/bus side pick-up (optional)	0 → 1
Time delay for alarm	
Definite time function operating time setting	0.000…1800.000 s, setting step 0.005 s
Inaccuracy: - Definite time (U_M/U_{SET} ratio > 1.05/0.95)	±1.0 % or ±35 ms

© Arcteq Relays Ltd
IM00014

Instant operation time (alarm): - U_M/U_{SET} ratio > 1.05/0.95	<80 ms
VTS MCB trip bus/line (external input)	<50 ms
Reset	
Reset ratio	97/103 % of the pick-up voltage setting
Reset time setting Inaccuracy: Reset time	0.000…150.000 s, step 0.005 s ±2.0 % or ±80 ms
Instant reset time and start-up reset	<50 ms
VTS MCB trip bus/line (external input)	<50 ms

NOTICE!
When turning on the auxiliary power of a device, the normal condition of a stage has to be fulfilled before tripping.

9.2.3.3 Circuit breaker wear monitoring

Table. 9.2.3.3 - 414. Technical data for the circuit breaker wear monitoring function.

Pick-up	
Breaker characteristics settings: - Nominal breaking current - Maximum breaking current - Operations with nominal current - Operations with maximum breaking current	 0.00…100.00 kA, setting step 0.001 kA 0.00…100.00 kA, setting step 0.001 kA 0…200 000 operations, setting step 1 operation 0…200 000 operations, setting step 1 operation
Pick-up setting for Alarm 1 and Alarm 2	0…200 000 operations, setting step 1 operation
Inaccuracy	
Inaccuracy for current/operations counter: - Current measurement element - Operation counter	 $0.1\times I_N > I < 2 \times I_N$ ±0.2 % of the measured current, rest 0.5 % ±0.5 % of operations deducted

9.2.3.4 Current total harmonic distortion

Table. 9.2.3.4 - 415. Technical data for the total harmonic distortion function.

Input signals	
Current inputs	Phase current inputs: I_{L1} (A), I_{L2} (B), I_{L3} (C) Residual current channel I_{01} (Coarse) Residual current channel I_{02} (Fine)
Current input magnitudes	Current measurement channels (FFT result) up to the 31st harmonic component.
Pick-up	

Operating modes	Power THD Amplitude THD
Pick-up setting for all comparators	0.10…200.00 % , setting step 0.01 %
Inaccuracy	±3 % of the set pick-up value > 0.5 × I_N setting; 5 mA < 0.5 × I_N setting.
Time delay	
Definite time function operating time setting for all timers	0.000…1800.000 s, setting step 0.005 s
Inaccuracy: - Definite time operating time - Instant operating time, when I_M/I_{SET} ratio > 3 - Instant operating time, when I_M/I_{SET} ratio 1.05 < I_M/I_{SET} < 3	±0.5 % or ±10 ms Typically <20ms Typically <25 ms
Reset	
Reset time	Typically <10 ms
Reset ratio	97 %

9.2.3.5 Fault locator (21FL)

Table. 9.2.3.5 - 416. Technical data for the fault locator function.

Input signals	
Current inputs	Phase current inputs: I_{L1} (A), I_{L2} (B), I_{L3} (C)
Voltage inputs	U_{L1}, U_{L2}, U_{L3} U_{L12}, U_{L23}, U_{L31} + U_0
Calculated reactance magnitudes when line-to-neutral voltages available	XL12, XL23, XL31, XL1, XL2, XL3
Calculated reactance magnitudes when line-to-line voltages available	XL12, XL23, XL31
Pick-up	
Trigger current >	0.00…40.00 × I_N, setting step 0.01 × I_N
Inaccuracy: - Triggering	±0.5 %I_{SET} or ±15 mA (0.10…4.0 × I_{SET})
Reactance	
Reactance per kilometer	0.000…5.000 s, setting step 0.001 Ω/km
Inaccuracy: - Reactance	±5.0 % (typically)
Operation (Triggering)	
Activation	From the trip signal of any protection stage

© Arcteq Relays Ltd
IM00014

Minimum operation time	At least 0.040 s of stage operation time required

9.2.3.6 Disturbance recorder

Table. 9.2.3.6 - 417. Technical data for the disturbance recorder function.

Recorded values	
Recorder analog channels	0…20 channels Freely selectable
Recorder digital channels	0…96 channels Freely selectable analog and binary signals 5 ms sample rate (FFT)
Performance	
Sample rate	8, 16, 32 or 64 samples/cycle
Recording length	0.000…1800.000 s, setting step 0.001 s The maximum length is determined by the chosen signals.
Number of recordings	0…100, 60 MB of shared flash memory reserved The maximum number of recordings according to the chosen signals and operation time setting combined

9.2.3.7 Event logger

Table. 9.2.3.7 - 418. Technical data for the event logger function.

General information	
Event history capacity	15 000 events
Event timestamp resolution	1 ms

9.3 Tests and environmental

Electrical environment compatibility

Table. 9.3 - 419. Disturbance tests.

All tests	CE-approved and tested according to EN 60255-26
Emissions	
Conducted emissions: EN 60255-26 Ch. 5.2, CISPR 22	150 kHz…30 MHz
Radiated emissions: EN 60255-26 Ch. 5.1, CISPR 11	30…1 000 MHz
Immunity	

Electrostatic discharge (ESD): EN 60255-26, IEC 61000-4-2	Air discharge 15 kV Contact discharge 8 kV
Electrical fast transients (EFT): EN 60255-26, IEC 61000-4-4	Power supply input 4 kV, 5/50 ns, 5 kHz Other inputs and outputs 4 kV, 5/50 ns, 5 kHz
Surge: EN 60255-26, IEC 61000-4-5	Between wires 2 kV, 1.2/50 µs Between wire and earth 4 kV, 1.2/50 µs
Radiated RF electromagnetic field: EN 60255-26, IEC 61000-4-3	f = 80….1 000 MHz, 10 V/m
Conducted RF field: EN 60255-26, IEC 61000-4-6	f = 150 kHz….80 MHz, 10 V (RMS)

Table. 9.3 - 420. Voltage tests.

Dielectric voltage test	
EN 60255-27, IEC 60255-5, EN 60255-1	2 kV (AC), 50 Hz, 1 min
Impulse voltage test	
EN 60255-27, IEC 60255-5	5 kV, 1.2/50 µs, 0.5 J

Physical environment compatibility

Table. 9.3 - 421. Mechanical tests.

Vibration test	
EN 60255-1, EN 60255-27, IEC 60255-21-1 Class 1	2…13.2 Hz, ± 3.5 mm 13.2…100 Hz, ± 1.0 g
Shock and bump test	
EN 60255-1,EN 60255-27, IEC 60255-21-2 Class 1	20 g, 1 000 bumps/direction.

Table. 9.3 - 422. Environmental tests.

Damp heat (cyclic)	
EN 60255-1, IEC 60068-2-30	Operational: +25…+55 °C, 93…97 % (RH), 12+12h
Dry heat	
EN 60255-1, IEC 60068-2-2	Storage: +70 °C, 16 h Operational: +55 °C, 16 h
Cold test	
EN 60255-1, IEC 60068-2-1	Storage: –40 °C, 16 h Operational: –20 °C, 16 h

© Arcteq Relays Ltd
IM00014

Table. 9.3 - 423. Environmental conditions.

IP classes	
Casing protection class	IP54 (front) IP21 (rear)
Temperature ranges	
Ambient service temperature range	–35…+70 °C
Transport and storage temperature range	–40…+70 °C
Other	
Altitude	<2000 m
Overvoltage category	III
Pollution degree	2

Casing and package

Table. 9.3 - 424. Dimensions and weight.

Without packaging (net)	
Dimensions	Height: 117 mm (4U) Width: 127 mm (¼ rack) Depth: 174 mm (no cards & connectors)
Weight	Appr. 1.75 kg
With packaging (gross)	
Dimensions	Height: 170 mm Width: 242 mm Depth: 219 mm
Weight	Appr. 2.25 kg

10 Ordering information

AQ - F 2 1 5 - P X X X A X A - X X X

Model
- **F** Feeder protection

Device size
- **1** 1/4 of 19" rack

Analog measurement
- **5** 5 Current measurement channels and 4 voltage measurement channels

Mounting
- **P** Panel mounted

Auxiliary voltage
- **H** 80...265 VAC/DC
- **L** 18...72 VDC

Measurement accuracy
- **0** Power/Energy measurement accuracy 0.5%
- **2** Power/Energy measurement accuracy 0.2%

Terminals
- **A** Standard
- **B** Ring-lug current terminals
- **C** Standard current terminals, spring cage voltage and I/O terminals
- **D** Ring-lug current terminals, spring cage voltage and I/O terminals

Reserved for future use
- **A** N/A

Digital inputs on power supply module
- **A** 3 Digital inputs, 24 V nominal threshold
- **B** 3 Digital inputs, 110 V nominal threshold
- **C** 3 Digital inputs, 220 V nominal threshold
- **D** 2 Digital inputs, 24 V nominal threshold
- **E** 2 Digital inputs, 110 V nominal threshold
- **F** 2 Digital inputs, 220 V nominal threshold

Reserved for future use
- **A** N/A

Slots C, E, F (3 pcs)
- **A** Empty
- **B** 8 Digital inputs
- **C** 5 Output relays (max. 2 pcs)
- **D** Arc protection with 4 point sensor channels, 2 x HSO, 1 x BI (max. 1 pc
- **F** 8 x RTD input (max. 2 pcs)
- **G** 2 x RJ-45 100Mb Ethernet & IRIG-B (max. 1 pcs) *
- **H** 2 x ST 100Mb Ethernet & IRIG-B (max. 1 pcs) *
- **I** 4 x mA outputs - 1 x mA input (max. 2 pcs)
- **J** Double LC 100Mb Ethernet (HSR, PRP redundant protocols) (max. 1 pcs) *
- **K** Double RJ45 100Mb Ethernet (HSR, PRP redundant protocols) (max. 1 pcs
- **L** RS-232 - Serial fiber (Plastic-Plastic) (max. 1 pcs) *
- **M** RS-232 - Serial fiber (Plastic-Glass) (max. 1 pcs) *
- **N** RS-232 - Serial fiber (Glass-Plastic) (max. 1 pcs) *
- **O** RS-232 - Serial fiber (Glass-Glass) (max. 1 pcs) *

* Can only be applied to the last slot

Accessories

Order code	Description	Note

© Arcteq Relays Ltd
IM00014

AX007	External 6-channel 2 or 3 wires RTD Input module, pre-configured	Requires an external 24 VDC supply.
AX008	External 8-ch Thermocouple mA Input module, pre-configured	Requires an external 24 VDC supply.
AQX009	Raising frame 87 mm	-
AX010	Raising frame 40 mm	-
AQX011	AQ-210 series combiflex frame	-
AQX012	AQ-210 series wall mounting bracket	-
AQ-01A	Light point sensor unit (8,000 lux threshold)	Max. cable length 200 m
AQ-01B	Light point sensor unit (25,000 lux threshold)	Max. cable length 200 m
AQ-01C	Light point sensor unit (50,000 lux threshold)	Max. cable length 200 m
AQ-02A	Pressure and light point sensor unit (8,000 lux threshold)	Max. cable length 200 m
AQ-02B	Pressure and light point sensor unit (25,000 lux threshold)	Max. cable length 200 m
AQ-02C	Pressure and light point sensor unit (50,000 lux threshold)	Max. cable length 200 m

11 Contact and reference information

Manufacturer

Arcteq Relays Ltd.

Visiting and postal address

Kvartsikatu 2 A 1
65300 Vaasa, Finland

Contacts

Phone:	+358 10 3221 370
Website:	arcteq.com
Technical support:	support.arcteq.fi +358 10 3221 388 (EET 9:00 – 17.00)
E-mail (sales):	sales@arcteq.com

© Arcteq Relays Ltd
IM00014